WWW.EDUARDOREPUESTOSAGRICOLAS.COM

EDUARDO

CATÁLOGO 2025

Repuestos compatibles para vendimiadoras

NEW HOLLAND | GREGOIRE | PELLENC

ÍNDICE

EDUARDO REPUESTOS AGRÍCOLAS 3

NEW HOLLAND (original y compatible) 6

GREGOIRE (original y compatible) 28

PELLENC (original y compatible) 38

RESPUESTA A UNA NECESIDAD

Nuestros repuestos compatibles representan una **alternativa perfectamente válida a los originales**. Ofrecemos productos de total confianza, individualmente probados en nuestro laboratorio técnico, y a unos precios muy competitivos. Nuestro equipo de técnicos especializados **estudia las necesidades cambiantes del sector para adaptarlas en cada momento**, mejorando de esta forma su rendimiento gracias a la retroalimentación que nos ofrecen.

Ofertamos una **extensa gama de productos y servicios**. Somos fabricantes, como productores de marca blanca, y para otras empresas y distribuidores.

Desde nuestros inicios, **el principal objetivo ha estado en obtener las mismas piezas**, desde la inyección de las piezas plásticas, a la realización de bandas transportadoras, mecanizado, torneado, montaje y, un largo etcétera de procesos.

EMPLAZAMIENTO PERFECTO

Eduardo Repuestos Agrícolas, perteneciente al grupo *Moldes y Resinas S.L.*, inició su actividad en el año 2012 de la mano de Eduardo Royo y María Rosa Lázaro, quienes tomaron como objetivo **solventar las necesidades descubiertas** que ostentaba el mercado vitícola español.

Uno de los factores que ha favorecido su rápido crecimiento es su ubicación: Burgos, **punto geográfico estratégico** a medio camino entre la Ribera del Duero y la Rioja, referentes vinícolas. Esto se traduce en una **constante renovación y mejora en las técnicas de creación, fabricación y producción** de los componentes ofertados, así como una mirada revolucionaria a las últimas técnicas del mundo de la vid y el olivo.

UN EQUIPO A TU DISPOSICIÓN

Eduardo Repuestos Agrícolas está formada por un **equipo dinámico y resolutivo**, cuyo principal objetivo es la satisfacción del cliente.

Desde la oficina técnica de la empresa, se prueban y desarrollan nuevas piezas y productos para adaptarse al ritmo cambiante del sector. En la misma línea, se ofrece un servicio de diseño de s**oluciones personalizadas** para atender las necesidades concretas de clientes particulares.

La **amplia red comercial y de distribución** adquirida durante estos años permite, desde el asesoramiento personal y resolución de cualquier duda, hasta la recepción de la mercancía, proceso en el cual intervienen los distintos miembros del equipo.

RESPONSABILIDAD Y COMPROMISO

El grupo persigue alcanzar la **máxima calidad, máximo surtido, y máximo servicio**, en el mínimo tiempo posible.

Es pues la **rapidez, puntualidad y el compromiso** los pilares que sustentan a esta empresa, y que se consideran esenciales y básicos a la hora de gestionar y enviar los productos diariamente.

La filosofía de los trabajadores que componen *Eduardo Repuestos Agrícolas* reside en proporcionar a los consumidores **mayor comodidad** a la hora de realizar sus compras, satisfacer sus necesidades de producto aumentando la especialización, y el ajuste de precio. En suma, lo que se desea es potenciar la **cercanía y la fidelización del cliente**.

NEW HOLLAND-BRAUD COMPATIBLE

EDUARDO

REF.201C

CESTA GRAN CAPACIDAD DERECHA

Comp. 944029647

8030L, 9030L, 9040L, 9050L H, 9050L L, 9050L SH, 9060L, 9060L GE, 9060L H, 9060L SH, 9070L H, 9070L L, 9070L L T5, 9070L SH, 9080L, 9080L GE, 9080L H, 9080L SH, 9090L, 9090L GE, 9090L H, 9090L H T4, 9090L H T5, 9090L SH, 9090L SH T4, 9090L SH T5, 9090L T3, 9090X, 9090X GE, 9090X GE T3, 9090X GE T4, 9090X GE T5, 9090X H, 9090X H H, 9090X H T4, 9090X O, 9090X O GE, 9090X O GE T3, 9090X O GE T4, 9090X O GE T5, 9090X O H T4, 9090X O T3, 9090X O T4, 9090X O T5, 9090X OP, 9090X OP GE, 9090X T3, 9090X T4, 9090X T5, , LM625, , SB56, SB58, SB60, SB62, SB64, SB65, VL600, VL6040, VL6050, VL6060, VL6070, VL6080, VL6090, VL610, VL620, VL630, VL640, VL660, VM4090, VX680, VX7090

REF.202C

CESTA GRAN CAPACIDAD IZQUIERDA

Comp. 944029648

8030L, 9030L, 9040L, 9050L H, 9050L L, 9050L SH, 9060L, 9060L GE, 9060L H, 9060L SH, 9070L H, 9070L L, 9070L L T5, 9070L SH, 9080L, 9080L GE, 9080L H, 9080L SH, 9090L, 9090L GE, 9090L H, 9090L H T4, 9090L H T5, 9090L SH, 9090L SH T4, 9090L SH T5, 9090L T3, 9090X, 9090X GE, 9090X GE T3, 9090X GE T4, 9090X GE T5, 9090X H, 9090X H H, 9090X H T4, 9090X O, 9090X O GE, 9090X O GE T3, 9090X O GE T4, 9090X O GE T5, 9090X O H T4, 9090X O T3, 9090X O T4, 9090X O T5, 9090X OP, 9090X OP GE, 9090X T3, 9090X T4, 9090X T5, , LM625, , SB36, SB56, SB58, SB60, SB62, SB64, SB65, VL600, VL6040, VL6050, VL6060, VL6070, VL6080, VL6090, VL610, VL620, VL630, VL640, VL660, VM4090, VX680, VX7090

REF.222C

KIT 10 CESTAS GRAN CAP. UNIDAS DCHA.

Comp. 944024789

8030L, 9030L, 9040L, 9050L H, 9050L L, 9050L SH, 9060L, 9060L H, 9070L H, 9070L L, 9070L L T5, 9070L SH, 9080L, 9080L H, 9090L, 9090L H, 9090L H T4, 9090L H T5, 9090L SH T4, 9090L SH T5, 9090L T3, 9090X GE T3, 9090X GE T4, 9090X GE T5, 9090X H T4, 9090X O GE T3, 9090X O GE T4, 9090X O GE T5, 9090X O H T4, 9090X O T3, 9090X O T4, 9090X O T5, 9090X T3, 9090X T4, 9090X T5, SB56, SB58, SB60, SB62, SB64, SB65, VL600, VL6040, VL6050, VL6060, VL6070, VL6080, VL6090, VL610, VL620, VL630, VL640, VL660, VX680, VX7090

REF.223C

KIT 10 CESTAS GRAN CAP. UNIDAS IZQ.

Comp. 944024790

8030L, 9030L, 9040L, 9050L H, 9050L L, 9050L SH, 9060L, 9060L H, 9070L H, 9070L L, 9070L L T5, 9070L SH, 9080L, 9080L H, 9090L, 9090L H, 9090L H T4, 9090L H T5, 9090L SH T4, 9090L SH T5, 9090L T3, 9090X GE T3, 9090X GE T4, 9090X GE T5, 9090X H T4, 9090X O GE T3, 9090X O GE T4, 9090X O GE T5, 9090X O H T4, 9090X O T3, 9090X O T4, 9090X O T5, 9090X T3, 9090X T4, 9090X T5, SB36, SB56, SB58, SB60, SB62, SB64, SB65, VL600, VL6040, VL6050, VL6060, VL6070, VL6080, VL6090, VL610, VL620, VL630, VL640, VL660, VX680, VX7090

REF.203C

CESTA MEDIA CAPACIDAD DERECHA

Comp. 944023785

7030L, SB33, SB35, SB36, SB53, SB55, SB56, SB58, SB60, SB62, SB64, SB65, VL5060, VL5080, VL5090, VL530, VL540, VL550, VL570, VM3080, VM3080 AL, VM3090, VN2090

REF.204C

CESTA MEDIA CAPACIDAD IZQDA.

Comp. 944023786

7030L, SB33, SB35, SB36, SB53, SB55, SB56, SB58, SB60, SB62, SB64, SB65, VL5060, VL5080, VL5090, VL530, VL540, VL550, VL570, VM3080, VM3080 AL, VM3090, VN2090

REF.224C

KIT 10 CESTAS MEDIA CAP. UNIDAS DCHA.

Comp. 87629861

7030L, SB53, SB55, SB56, SB58, SB60, SB62, SB64, VL5060, VL5080, VL5090, VL530, VL540, VL550, VL570

REF.225C

KIT 10 CESTAS MEDIA CAP. UNIDAS IZQ.

Comp. 87629862

7030L, SB53, SB55, SB56, SB58, SB60, SB62, SB64, VL5060, VL5080, VL5090, VL530, VL540, VL550, VL570

REF.735A

CESTA PEQUEÑA CAPACIDAD DERECHA 3 AGUJEROS

Comp. 913350503

1620, 1620S, 2720, 7030M, 7030M H, 9040M, 9070M, 9080N H, 9080N L, SB33, SB35, SB36, SB53, SB55, SB56, SB58, SB60, SB62, SB64, VL5060, VL5080, VL5090, VL6040, VL6050, VL6060, VL6070, VL6080, VL6090, VM3080, VM3080 AL, VM3090, VM340, VM370, VM4090, VM460, VN2080, VN2090, VN240, VN260, VN300

REF.735B

CESTA PEQUEÑA CAPACIDAD IZQDA. 3 AGUJEROS

Comp. 913350502

1620, 1620S, 2720, 7030M, 7030M H, 9040M, 9070M, 9080N H, 9080N L, SB33, SB35, SB36, SB53, SB55, SB56, SB58, SB60, SB62, SB64, VL5060, VL5080, VL5090, VL6040, VL6050, VL6060, VL6070, VL6080, VL6090, VM3080, VM3080 AL, VM3090, VM340, VM370, VM4090, VM460, VN2080, VN2090, VN240, VN260, VN300

REF.735C

KIT 10 CESTAS PEQUEÑAS 3 AGUJEROS DCHA.

Comp. 87629859

1620, 1620S, 2720, 7030M, 7030M H, 9040M, 9070M, 9080N H, 9080N L, SB33, SB35, SB36, VM3080, VM3090, VM340, VM370, VM4090, VM460, VN2080, VN240, VN260, VN300

REF.735D

KIT 10 CESTAS PEQUEÑAS 3 AGUJEROS IZQ.

Comp. 87629860

1620, 1620S, 2720, 7030M, 7030M H, 9040M, 9070M, 9080N H, 9080N L, SB33, SB35, SB36, VM3080, VM3090, VM340, VM370, VM4090, VM460, VN2080, VN240, VN260, VN300

REF.712A

CESTAS GRANDES MONTADAS 62+62 UNIDAS PATIN BLANCO

Comp. -

8030L, 9030L, 9040L, 9050L H, 9050L L, 9050L SH, 9060L, 9060L GE, 9060L H, 9060L SH, 9070L H, 9070L L, 9070L L T5, 9070L SH, 9080L, 9080L GE, 9080L H, 9080L SH, 9090L, 9090L GE, 9090L H, 9090L H T4, 9090L H T5, 9090L SH, 9090L SH T4, 9090L SH T5, 9090L T3, 9090X, 9090X GE, 9090X GE T3, 9090X GE T4, 9090X GE T5, 9090X H, 9090X H H, 9090X H T4, 9090X O, 9090X O GE, 9090X O GE T3, 9090X O GE T4, 9090X O GE T5, 9090X O H T4, 9090X O T3, 9090X O T4, 9090X O T5, 9090X OP, 9090X OP GE, 9090X T3, 9090X T4, 9090X T5, , LM625, , SB56, SB58, SB60, SB62, SB64, SB65, VL600, VL6040, VL6050, VL6060, VL6070, VL6080, VL6090, VL610, VL620, VL630, VL640, VL660, VM4090, VX680, VX7090

REF.712F

CESTAS GRANDES MONTADAS 62+62 UNIDAS PATIN NEGRO

Comp. -

8030L, 9030L, 9040L, 9050L H, 9050L L, 9050L SH, 9060L, 9060L GE, 9060L H, 9060L SH, 9070L H, 9070L L, 9070L L T5, 9070L SH, 9080L, 9080L GE, 9080L H, 9080L SH, 9090L, 9090L GE, 9090L H, 9090L H T4, 9090L H T5, 9090L SH, 9090L SH T4, 9090L SH T5, 9090L T3, 9090X, 9090X GE, 9090X GE T3, 9090X GE T4, 9090X GE T5, 9090X H, 9090X H H, 9090X H T4, 9090X O, 9090X O GE, 9090X O GE T3, 9090X O GE T4, 9090X O GE T5, 9090X O H T4, 9090X O T3, 9090X O T4, 9090X O T5, 9090X OP, 9090X OP GE, 9090X T3, 9090X T4, 9090X T5, , LM625, , SB56, SB58, SB60, SB62, SB64, SB65, VL600, VL6040, VL6050, VL6060, VL6070, VL6080, VL6090, VL610, VL620, VL630, VL640, VL660, VM4090, VX680, VX7090

REF.712G

CESTAS GRANDES MONTADAS 62+62 UNIDAS PATIN AZUL

Comp. -

8030L, 9030L, 9040L, 9050L H, 9050L L, 9050L SH, 9060L, 9060L GE, 9060L H, 9060L SH, 9070L H, 9070L L, 9070L L T5, 9070L SH, 9080L, 9080L GE, 9080L H, 9080L SH, 9090L, 9090L GE, 9090L H, 9090L H T4, 9090L H T5, 9090L SH, 9090L SH T4, 9090L SH T5, 9090L T3, 9090X, 9090X GE, 9090X GE T3, 9090X GE T4, 9090X GE T5, 9090X H, 9090X H H, 9090X H T4, 9090X O, 9090X O GE, 9090X O GE T3, 9090X O GE T4, 9090X O GE T5, 9090X O H T4, 9090X O T3, 9090X O T4, 9090X O T5, 9090X OP, 9090X OP GE, 9090X T3, 9090X T4, 9090X T5, , LM625, , SB56, SB58, SB60, SB62, SB64, SB65, VL600, VL6040, VL6050, VL6060, VL6070, VL6080, VL6090, VL610, VL620, VL630, VL640, VL660, VM4090, VX680, VX7090

REF.712C

CESTAS GRANDES MONTADAS 68+68 UNIDAS PATIN BLANCO

Comp. -

8030L, 9030L, 9040L, 9050L H, 9050L L, 9050L SH, 9060L, 9060L GE, 9060L H, 9060L SH, 9070L H, 9070L L, 9070L L T5, 9070L SH, 9080L, 9080L GE, 9080L H, 9080L SH, 9090L, 9090L GE, 9090L H, 9090L H T4, 9090L H T5, 9090L SH, 9090L SH T4, 9090L SH T5, 9090L T3, 9090X, 9090X GE, 9090X GE T3, 9090X GE T4, 9090X GE T5, 9090X H, 9090X H H, 9090X H T4, 9090X O, 9090X O GE, 9090X O GE T3, 9090X O GE T4, 9090X O GE T5, 9090X O H T4, 9090X O T3, 9090X O T4, 9090X O T5, 9090X OP, 9090X OP GE, 9090X T3, 9090X T4, 9090X T5, , LM625, , SB56, SB58, SB60, SB62, SB64, SB65, VL600, VL6040, VL6050, VL6060, VL6070, VL6080, VL6090, VL610, VL620, VL630, VL640, VL660, VM4090, VX680, VX7090

REF.712J

CESTAS GRANDES MONTADAS 68+68 UNIDAS PATIN NEGRO

Comp. -

8030L, 9030L, 9040L, 9050L H, 9050L L, 9050L SH, 9060L, 9060L GE, 9060L H, 9060L SH, 9070L H, 9070L L, 9070L L T5, 9070L SH, 9080L, 9080L GE, 9080L H, 9080L SH, 9090L, 9090L GE, 9090L H, 9090L H T4, 9090L H T5, 9090L SH, 9090L SH T4, 9090L SH T5, 9090L T3, 9090X, 9090X GE, 9090X GE T3, 9090X GE T4, 9090X GE T5, 9090X H, 9090X H H, 9090X H T4, 9090X O, 9090X O GE, 9090X O GE T3, 9090X O GE T4, 9090X O GE T5, 9090X O H T4, 9090X O T3, 9090X O T4, 9090X O T5, 9090X OP, 9090X OP GE, 9090X T3, 9090X T4, 9090X T5, , LM625, , SB56, SB58, SB60, SB62, SB64, SB65, VL600, VL6040, VL6050, VL6060, VL6070, VL6080, VL6090, VL610, VL620, VL630, VL640, VL660, VM4090, VX680, VX7090

REF.712K

CESTAS GRANDES MONTADAS 68+68 UNIDAS PATIN AZUL

Comp. -

8030L, 9030L, 9040L, 9050L H, 9050L L, 9050L SH, 9060L, 9060L GE, 9060L H, 9060L SH, 9070L H, 9070L L, 9070L L T5, 9070L SH, 9080L, 9080L GE, 9080L H, 9080L SH, 9090L, 9090L GE, 9090L H, 9090L H T4, 9090L H T5, 9090L SH, 9090L SH T4, 9090L SH T5, 9090L T3, 9090X, 9090X GE, 9090X GE T3, 9090X GE T4, 9090X GE T5, 9090X H, 9090X H H, 9090X H T4, 9090X O, 9090X O GE, 9090X O GE T3, 9090X O GE T4, 9090X O GE T5, 9090X O H T4, 9090X O T3, 9090X O T4, 9090X O T5, 9090X OP, 9090X OP GE, 9090X T3, 9090X T4, 9090X T5, , LM625, , SB56, SB58, SB60, SB62, SB64, SB65, VL600, VL6040, VL6050, VL6060, VL6070, VL6080, VL6090, VL610, VL620, VL630, VL640, VL660, VM4090, VX680, VX7090

REF.712B

CESTAS MEDIAS MONTADAS 62+62 UNIDAS, PATIN BLANCO

Comp. -

7030L, SB33, SB35, SB36, SB53, SB55, SB56, SB58, SB60, SB62, SB64, SB65, VL5060, VL5080, VL5090, VL530, VL540, VL550, VL570, VM3080, VM3080 AL, VM3090, VN2090

REF.712H

CESTAS MEDIAS MONTADAS 62+62 UNIDAS, PATIN NEGRO

Comp. -

7030L, SB33, SB35, SB36, SB53, SB55, SB56, SB58, SB60, SB62, SB64, SB65, VL5060, VL5080, VL5090, VL530, VL540, VL550, VL570, VM3080, VM3080 AL, VM3090, VN2090

IVA no incluido

Transporte EU gratuito en pedidos 600€

Todas las marcas comerciales pertenecen a sus respectivos propietarios y su uso es solo informativo.

WWW.EDUARDOREPUESTOSAGRICOLAS.COM

Compruebe las Ref. antes.

NEW HOLLAND-BRAUD
COMPATIBLE

EDUARDO

REF.712D

CESTAS MEDIAS MONTADAS 55+55 UNIDAS, PATIN BLANCO

Comp. -

7030L, SB33, SB35, SB36, SB53, SB55, SB56, SB58, SB60, SB62, SB64, SB65, VL5060, VL5080, VL5090, VL530, VL540, VL550, VL570, VM3080, VM3080 AL, VM3090, VN2090

REF.712L

CESTAS MEDIAS MONTADAS 55+55 UNIDAS, PATIN NEGRO

Comp. -

7030L, SB33, SB35, SB36, SB53, SB55, SB56, SB58, SB60, SB62, SB64, SB65, VL5060, VL5080, VL5090, VL530, VL540, VL550, VL570, VM3080, VM3080 AL, VM3090, VN2090

REF.712E

CESTAS PEQUEÑAS MONTADAS 55+55 UNIDAS , PATIN BLANCO

Comp. -

1620, 1620S, 2720, 7030M, 7030M H, 9040M, 9070M, 9080N H, 9080N L, SB33, SB35, SB36, SB53, SB55, SB56, SB58, SB60, SB62, SB64, VL5060, VL5080, VL5090, VL6040, VL6050, VL6060, VL6070, VL6080, VL6090, VM3080, VM3080 AL, VM3090, VM340, VM370, VM4090, VM460, VN2080, VN2090, VN240, VN260, VN300

REF.205B

PATIN BLANCO

Comp. 944028054,944005832

1214, 1620, 1620S, 2414, 2420, 2514, 2520, 2614, 2620, 2714, 2720, 9040L, 9040M, 9060L, 9060L H, 9080L, 9080L H, 9090L, 9090L H, 9090X O, 9090X O GE, 9090X O GE T3, 9090X O GE T4, 9090X O GE T5, 9090X O H T4, 9090X O T3, 9090X O T4, 9090X O T5, 9090X OP, 9090X OP GE, , SB33, SB35, SB36, SB52, SB53, SB54, SB55, SB56, SB58, SB60, SB62, SB64, SB65, VL5060, VL5080, VL5090, VL530, VL540, VL550, VL570, VL600, VL6040, VL6050, VL6060, VL6070, VL6080, VL6090, VL610, VL620, VL630, VL640, VL660, VM3080, VM3080 AL, VM3090, VM340, VM370, VM4090, VM460, VN2080, VN2090, VN240, VN260, VN300, VX680, VX7090

REF.206B

PATIN NEGRO

Comp. 84255554

7030L, 9030L, 9040L, 9040M, 9050L H, 9050L L, 9060L, 9060L GE, 9060L H, 9060L SH, 9070L H, 9070L L, 9070L L T5, 9070M, 9080L, 9080L GE, 9080L H, 9080L SH, 9090L, 9090L GE, 9090L H, 9090L H T4, 9090L H T5, 9090L SH, 9090L T3, 9090X, 9090X GE, 9090X H, 9090X H H, 9090X OP, 9090X OP GE, SB33, SB35, SB36, SB53, SB55, SB56, SB58, SB60, SB62, SB64, VL5060, VL5080, VL5090, VL530, VL540, VL550, VL570, VL600, VL6040, VL6050, VL6060, VL6070, VL6080, VL6090, VL610, VL620, VL630, VL640, VL660, VM3080, VM3080 AL, VM3090, VM340, VM370, VM4090, VM460, VN2080, VN2090, VN240, VN260, VN300, VX680, VX7090

REF.206C

PATIN AZUL

Comp. 84487735

7030M, 7030M H, 8030L, 9030L, 9050L H, 9050L L, 9050L SH, 9070L H, 9070L L, 9070L L T5, 9070L SH, 9070M, 9080N H, 9080N L, 9090L H T4, 9090L H T5, 9090L SH T4, 9090L SH T5, 9090L T3, 9090X GE T3, 9090X GE T4, 9090X GE T5, 9090X H T4, 9090X T3, 9090X T4, 9090X T5

REF.218B

CHAPA UNION CESTAS (inox. Espesor 1,2mm)

Comp. 944023592

1214, 7030L, 8030L, 9030L, 9040L, 9050L H, 9050L L, 9050L SH, 9060L, 9060L GE, 9060L H, 9060L SH, 9070L H, 9070L L, 9070L L T5, 9070L SH, 9080L, 9080L GE, 9080L H, 9080L SH, 9090L, 9090L GE, 9090L H, 9090L H T4, 9090L H T5, 9090L SH, 9090L SH T4, 9090L SH T5, 9090L T3, 9090X, 9090X GE, 9090X GE T3, 9090X GE T4, 9090X GE T5, 9090X H, 9090X H H, 9090X H T4, 9090X O, 9090X O GE, 9090X O GE T3, 9090X O GE T4, 9090X O GE T5, 9090X O H T4, 9090X O T3, 9090X O T4, 9090X O T5, 9090X OP, 9090X OP GE, 9090X T3, 9090X T4, 9090X T5, LM625, SB36, SB52, SB53, SB54, SB55, SB56, SB58, SB60, SB62, SB64, SB65, VL5060, VL5080, VL5090, VL530, VL540, VL550, VL570, VL600, VL6040, VL6050, VL6060, VL6070, VL6080, VL6090, VL610, VL620, VL630, VL640, VL660, VM3080, VM3080 AL, VM3090, VM4090, VN2090, VX680, VX7090

REF.218E

¡ REFORZADA !

CLIP UNION CESTAS

Comp. 47844511

7030L, 8030L, 9030L, 9050L H, 9050L L, 9050L SH, 9070L H, 9070L L, 9070L L T5, 9070L SH, 9090L H T4, 9090L H T5, 9090L SH T4, 9090L SH T5, 9090L T3, 9090X GE T3, 9090X GE T4, 9090X GE T5, 9090X H T4, 9090X O GE T3, 9090X O GE T4, 9090X O GE T5, 9090X O H T4, 9090X O T3, 9090X O T4, 9090X O T5, 9090X T3, 9090X T4, 9090X T5,

REF.219D

PINZA UNION PATIN -CESTA (tornillo igual a original, cincado en dorado)

Comp. 913126098

1214, 1620, 1620S, 2414, 2420, 2514, 2520, 2614, 2620, 2714, 2720, 7030L, 7030M, 7030M H, 8030L, 9030L, 9040L, 9040M, 9050L H, 9050L L, 9060L, 9060L GE, 9060L H, 9060L SH, 9070L H, 9070L L, 9070L L T5, 9070L SH, 9070M, 9080L, 9080L GE, 9080L H, 9080L SH, 9080N H, 9080N L, 9090L, 9090L GE, 9090L H, 9090L H T4, 9090L H T5, 9090L SH, 9090L SH T4, 9090L SH T5, 9090L T3, 9090X, 9090X GE, 9090X GE T3, 9090X GE T4, 9090X GE T5, 9090X H, 9090X H H, 9090X H T4, 9090X O, 9090X O GE, 9090X O GE T3, 9090X O GE T4, 9090X O GE T5, 9090X O H T4, 9090X O T3, 9090X O T4, 9090X O T5, 9090X OP, 9090X OP GE, 9090X T3, 9090X T4, 9090X T5, SB33, SB35, SB36, SB52, SB53, SB54, SB55, SB56, SB58, SB60, SB62, SB64, SB65, VL5060, VL5080, VL5090, VL530, VL540, VL550, VL570, VL600, VL6040, VL6050, VL6060, VL6070, VL6080, VL6090, VL610, VL620, VL630, VL640, VL660, VM3080, VM3080 AL, VM3090, VM340, VM370, VM4090, VM460, VN2080, VN2090, VN240, VN260, VN300, VX680, VX7090

REF.220B

CHAPA BASE INOXIDABLE VL

Comp. 944029158

8030L, 9030L, 9040L, 9040M, 9050L H, 9050L L, 9050L SH, 9060L, 9060L GE, 9060L H, 9060L SH, 9070L H, 9070L L, 9070L L T5, 9070L SH, 9070M, 9080L, 9080L GE, 9080L H, 9080L SH, 9090L, 9090L GE, 9090L H, 9090L H T4, 9090L H T5, 9090L SH, 9090L SH T4, 9090L SH T5, 9090L T3, 9090X, 9090X GE, 9090X GE T3, 9090X GE T4, 9090X GE T5, 9090X H, 9090X H H, 9090X H T4, 9090X O, 9090X O GE, 9090X O GE T3, 9090X O GE T4, 9090X O GE T5, 9090X O H T4, 9090X O T3, 9090X O T4, 9090X O T5, 9090X OP, 9090X OP GE, 9090X T3, 9090X T4, 9090X T5, , SB33, SB35, SB52, SB53, SB54, SB55, SB64, SB65, VL5060, VL5080, VL5090, VL530, VL540, VL550, VL570, VL600, VL6040, VL6050, VL6060, VL6070, VL6080, VL6090, VL610, VL620, VL630, VL640, VL660, VM3080, VM3080 AL, VM3090, VM340, VM370, VM4090, VM460, VN2080, VN240, VN260, VN300, VX680, VX7090

REF.220D

CHAPA BASE INOXIDABLE SB

Comp. 944011361

2720, 7030L, SB33, SB35, SB36, SB52, SB53, SB54, SB55, SB56, SB58, SB60, SB62, SB64, SB65, VL5060, VL5080, VL5090, VL530, VL540, VL550, VL570, VM3080, VM3080 AL, VM3090, VM4090, VM460, VN2090, VN240

REF.220E

RASCADOR INOX. DERECHA (inox. Espesor 4mm)

Comp. 84184935

8030L, 9030L, 9040L, 9050L H, 9050L L, 9050L SH, 9060L, 9060L GE, 9060L H, 9060L SH, 9070L H, 9070L L, 9070L L T5, 9070L SH, 9080L, 9080L GE, 9080L H, 9080L SH, 9090L, 9090L GE, 9090L H, 9090L H T4, 9090L H T5, 9090L SH, 9090L SH T4, 9090L SH T5, 9090L T3, 9090X, 9090X GE, 9090X GE T3, 9090X GE T4, 9090X GE T5, 9090X H, 9090X H H, 9090X H T4, 9090X O, 9090X O GE, 9090X O GE T3, 9090X O GE T4, 9090X O GE T5, 9090X O H T4, 9090X O T3, 9090X O T4, 9090X O T5, 9090X OP, 9090X OP GE, 9090X T3, 9090X T4, 9090X T5, VX7090

REF.220F

RASCADOR INOX. IZQUIERDA (inox. Espesor 4mm)

Comp. 84184934

8030L, 9030L, 9040L, 9050L H, 9050L L, 9050L SH, 9060L, 9060L GE, 9060L H, 9060L SH, 9070L H, 9070L L, 9070L L T5, 9070L SH, 9080L, 9080L GE, 9080L H, 9080L SH, 9090L, 9090L GE, 9090L H, 9090L H T4, 9090L H T5, 9090L SH, 9090L SH T4, 9090L SH T5, 9090L T3, 9090X, 9090X GE, 9090X GE T3, 9090X GE T4, 9090X GE T5, 9090X H, 9090X H H, 9090X H T4, 9090X O, 9090X O GE, 9090X O GE T3, 9090X O GE T4, 9090X O GE T5, 9090X O H T4, 9090X O T3, 9090X O T4, 9090X O T5, 9090X OP, 9090X OP GE, 9090X T3, 9090X T4, 9090X T5, VX7090

REF.221B

CHAPA SUPERIOR CESTA INOX (inox. Espesor 2mm)

Comp. 944023349,913126

8030L, 9030L, 9040L, 9050L H, 9050L L, 9050L SH, 9060L, 9060L GE, 9060L H, 9060L SH, 9070L H, 9070L L, 9070L L T5, 9070L SH, 9080L, 9080L GE, 9080L H, 9080L SH, 9090L, 9090L GE, 9090L H, 9090L H T4, 9090L H T5, 9090L SH, 9090L SH T4, 9090L SH T5, 9090L T3, 9090X, 9090X GE, 9090X GE T3, 9090X GE T4, 9090X GE T5, 9090X H, 9090X H H, 9090X H T4, 9090X O, 9090X O GE, 9090X O GE T3, 9090X O GE T4, 9090X O GE T5, 9090X O H T4, 9090X O T3, 9090X O T4, 9090X O T5, 9090X OP, 9090X OP GE, 9090X T3, 9090X T4, 9090X T5, SB65, VL600, VL6040, VL6050, VL6060, VL6070, VL6080, VL6090, VL610, VL620, VL630, VL640, VL660, VM4090, VX680, VX7090

REF.737A

CHAPA UNION CESTAS PEQUEÑA

Comp. 944003810

SB60 ,SB62 ,SB64 ,VL5060 ,VL5080 ,VL5090 ,VL6040 ,VL6050 ,VL6060 ,VL6080 ,VL6090 ,VM3080 AL ,VM3080 ,VM3090 ,VM340 ,VM370 ,VM4090 ,VM460 ,VN2080 ,VN2090 ,VN260 ,7030M ,9070M ,9040M ,9080N H ,9080N H ,9080N L ,1620,1620S ,VL6070 ,VN240 ,VN300 ,2720,SB33 ,SB35 ,SB36 ,SB56 ,SB58 ,7030M H

REF.737B

CHAPA BASE CESTAS PEQUEÑAS

Comp. 84287465

7030M, 7030M H, 9070M, 9080N H, 9080N L, VN2080, VN2090

REF.737C

CHAPA BASE O SUPERIOR CESTAS 3 AGUJEROS

Comp. 913126192

1214, 1620, 1620S, 2414, 2420, 2514, 2520, 2614, 2620, 2714, 2720, 7030L, 7030M, 7030M H, 9040M, 9070M, 9080N H, 9080N L, SB33, SB35, SB36, SB52, SB53, SB54, SB55, SB56, SB58, SB60, SB62, SB64, VL5060, VL5080, VL5090, VL530, VL540, VL550, VL570, VL6040, VL6050, VL6060, VL6070, VL6080, VL6090, VM3080, VM3080 AL, VM3090, VM340, VM370, VM4090, VM460, VN2080, VN2090, VN240, VN260, VN300

REF.229C

CADENA 267 ESLABONES (11,6 metros) (67 CESTAS)

Comp. 944032962

9030L, 9040L, 9040M, 9050L H, 9050L L, 9050L SH, 9060L, 9060L H, 9060L SH, 9070L H, 9070L L, 9070L L T5, 9070M, 9080L, 9080L H, 9080L SH, 9090L, 9090L H, 9090L H T4, 9090L H T5, 9090L SH, 9090L SH T4, 9090L T3, 9090X, 9090X GE, 9090X GE T4, 9090X H, 9090X H H, 9090X T4, VL600, VL6040, VL6050, VL6060, VL6070, VL6080, VL6090, VL610, VL620, VL630, VL640, VL660, VX680, VX7090

REF.229D

CADENA 247 ESLABONES (10,7 metros)(62 CESTAS)

Comp. 944031392

9040L, 9040M, 9060L, 9060L GE, 9060L H, 9060L SH, 9080L, 9080L GE, 9080L H, 9080L SH, 9090L, SB36, SB56, SB58, SB60, SB62, SB64, VL600, VL6040, VL6050, VL6060, VL6070, VL6080, VL6090, VL610, VL620, VL630, VL640, VL660, VM4090

REF.229F

CADENA -ESLABONES (100 metros)

Comp. -

9090X O, 9090X O GE, 9090X O GE T3, 9090X O GE T4, 9090X O GE T5, 9090X O H T4, 9090X O T3, 9090X O T4, 9090X O T5, 9090X OP, 9090X OP GE, VX7090

Compruebe las Ref. antes.

Todas las marcas comerciales pertenecen a sus respectivos propietarios y su uso es solo informativo.

WWW.EDUARDOREPUESTOSAGRICOLAS.COM

IVA no incluido

Transporte EU gratuito en pedidos 600€

NEW HOLLAND-BRAUD COMPATIBLE

EDUARDO

REF.229G

CADENA 3 ESLABONES

Comp. 913505083

9090X O, 9090X O GE, 9090X O GE T3, 9090X O GE T4, 9090X O GE T5, 9090X O H T4, 9090X O T3, 9090X O T4, 9090X O T5, 9090X OP, 9090X OP GE, VX7090

REF.229H

CADENA 287 ESLABONES (11,92 m.) (72 CESTAS) CABEZAL OLIVE

Comp. -

9090X O, 9090X O GE, 9090X O GE T3, 9090X O GE T4, 9090X O GE T5, 9090X O H T4, 9090X O T3, 9090X O T4, 9090X O T5, 9090X OP, 9090X OP GE, VX7090

REF.230B

TUERCA CIEGA INOXIDABLE

Comp. 920008124

1620, 1620S, 2414, 2420, 2514, 2520, 2614, 2620, 2714, 2720, 7030L, 7030M, 7030M H, 8030L, 9030L, 9040L, 9040M, 9050L H, 9050L L, 9050L SH, 9060L, 9060L GE, 9060L H, 9060L SH, 9070L H, 9070L L, 9070L L T5, 9070L SH, 9070M, 9070N H T5, 9070N L, 9070N L T5, 9070 , 9080L, 9080L GE, 9080L H, 9080L SH, 9080N H, 9080N L, 9090L, 9090L GE, 9090L H, 9090L H T4, 9090L H T5, 9090L SH, 9090L SH T4, 9090L SH T5, 9090L T3, 9090X, 9090X GE, 9090X GE T3, 9090X GE T4, 9090X GE T5, 9090X H, 9090X H H, 9090X H T4, 9090X O, 9090X O GE, 9090X O GE T3, 9090X O GE T4, 9090X O GE T5, 9090X O H T4, 9090X O T3, 9090X O T4, 9090X O T5, 9090X OP, 9090X OP GE, 9090X T3, 9090X T4, 9090X T5, 5833, 5835, 5836, 5852, 5853, 5854, 5855, 5856, 5858, 5860, 5862, 5864, 5865, VL5060, VL5080, VL5090, VL530, VL540, VL550, VL570, VL600, VL6040, VL6050, VL6060, VL6070, VL6080, VL6090, VL610, VL620, VL630, VL640, VL660, VM3080, VM3080 AL, VM3090, VM340, VM370, VM4090, VM460, VN2080, VN2090, VN240, VN260, VN300, VX680, VX7090

REF.231A

UNION CADENAS (completa)

Comp. 48147387(920008122+2pz913126220+86625003)

1214, 1620, 1620S, 2414, 2420, 2514, 2520, 2614, 2620, 2714, 2720, 7030L, 7030M, 7030M H, 8030L, 9030L, 9040L, 9040M, 9050L H, 9050L L, 9050L SH, 9060L, 9060L GE, 9060L H, 9060L SH, 9070L H, 9070L L, 9070L L T5, 9070L SH, 9070M, 9070N L, 9070N L T5, 9070 , 9080L, 9080L GE, 9080L H, 9080L SH, 9080N H, 9080N L, 9090L, 9090L GE, 9090L H, 9090L H T4, 9090L H T5, 9090L SH, 9090L SH T4, 9090L SH T5, 9090L T3, 9090X, 9090X GE, 9090X GE T3, 9090X GE T4, 9090X GE T5, 9090X H, 9090X H H, 9090X H T4, 9090X O, 9090X O GE, 9090X O GE T3, 9090X O GE T4, 9090X O GE T5, 9090X O H T4, 9090X O T3, 9090X O T4, 9090X O T5, 9090X OP, 9090X OP GE, 9090X T3, 9090X T4, 9090X T5, 5833, 5835, 5836, 5852, 5853, 5854, 5855, 5856, 5858, 5860, 5862, 5864, 5865, VL5060, VL5080, VL5090, VL530, VL540, VL550, VL570, VL600, VL6040, VL6050, VL6060, VL6070, VL6080, VL6090, VL610, VL620, VL630, VL640, VL660, VM3080, VM3080 AL, VM3090, VM340, VM370, VM4090, VM460, VN2080, VN2090, VN240, VN260, VN300, VX680, VX7090

REF.215B

SACUDIDOR HUECO 32/15 mm/1739 MM

Comp. 944007307, 84171535,47699254

5B60 ,5B62 ,5B64 ,5B65 ,VL5060 ,VL5080 ,VL5090 ,VL6040 ,VL6050 ,VL6060 ,VL6080 ,VL6090 ,VM3080 AL , ,VM3080 ,VM3090 ,VM340 ,VM370 ,VM4090 ,VM460 ,VN2090 ,VX7090 ,VX7090,7030L ,7030M ,8030L ,9080L GE ,9080L ,9080L H ,9080L SH ,9090L ,9090L H ,9090L SH ,9050L H ,9090L H T4 ,9070L H ,9070L L ,9050L L ,9040L ,9060L GE ,9060L H ,9060L SH ,9070M ,9040M ,9090X O HEAD T4 ,9090X GE ,9090X ,9090X H ,9090X O GE ,9090X O ,9090X GE T4 ,9090X O GE T4 ,9090X T4 ,9090X O T4 ,9090X HEAD T4 ,9090X O GE T5 ,9090X GE T5 ,9090X T5 ,VL640 ,VL660 ,VX680 ,9060L ,9030L ,VL530 ,VL540 ,VL550 ,VL570 ,9090L GE ,VL600 ,VL6070 ,VL610 ,VL620 ,VL630 ,9090X O T3 ,9090X O T5 ,9090L H T5 ,9090L SH T4 ,9090X H HEAD ,9090X OP ,9090X O GE T3 ,9090X OP GE ,5B33 ,5B35 ,5B36 ,5B52 ,5B53 ,5B54 ,5B55 ,5B56 ,5B58 ,9090X GE T3 ,9090X T3 ,9090L T3 ,9090L SH T5 ,7030M HEAD ,9050L SH ,9070L SH ,9070L L T5 ,9050L SH T5 ,9070M T5 ,9030L T5 ,9070L H T5 ,9070L SH T5 ,9050L H T5 ,9050L L T5 ,8030L T5 ,11.90X MULTI

REF.215E

SACUDIDOR DOBLADO 25 mm S. 9000N

Comp. 47699249, 944031167, 84174661

9080N H, 9080N L, VN2080, VN240, VN260

REF.232B

VARA FIBRA CON TUBO INOX. DOBLADO OLIVAR (longitud 100cm)

Comp. -

9090X O, 9090X O GE, 9090X O GE T3, 9090X O GE T4, 9090X O H T4, 9090X O T3, 9090X O T4, 9090X OP, 9090X OP GE, GREGOIRE 1, GREGOIRE

REF.233B

VARA FIBRA CONTUBO INOX.SIN DOBLAR OLIVAR (longitud 100cm)

Comp. 84343361

9090X O, 9090X O GE, 9090X O GE T3, 9090X O GE T4, 9090X O H T4, 9090X O T3, 9090X O T4, 9090X OP, 9090X OP GE, GREGOIRE 1, GREGOIRE

REF.755A

SACUDIDOR 9080N

Comp. 51494407

9080N

REF.517A*

MEDIA COQUILLA

Comp. 944025739

7030M, 7030M H, 8030L, 9040L, 9040M, 9060L, 9060L GE, 9060L H, 9060L SH, 9080L, 9080L GE, 9080L H, 9080L SH, 9090L, 9090L GE, 9090L H, 9090L SH, 9090L T3, 9090X, 9090X GE, 9090X H, 9090X H H, VL5060, VL5080, VL5090, VL550, VL570, VL6040, VL6050, VL6060, VL6070, VL6080, VL6090, VL610, VL620, VL630, VL640, VL660, VM3080, VM3080 AL, VM3090, VM370, VM4090, VM460, VN2090, VX680, VX7090

REF.518A*

MEDIA COQUILLA

Comp. 944021280

7030M, 7030M H, 8030L, 9040L, 9040M, 9050L L, 9050L SH, 9060L, 9060L GE, 9060L H, 9060L SH, 9070L L, 9070L L T5, 9070L SH, 9070M, 9080L, 9080L GE, 9080L H, 9080L SH, 9090L, 9090L GE, 9090L H, 9090L SH, 9090L SH T4, 9090L SH T5, 9090L T3, 9090X, 9090X GE, 9090X H, 9090X H H, VL5060, VL5080, VL5090, VL550, VL570, VL6040, VL6050, VL6060, VL6070, VL6080, VL6090, VL610, VL620, VL630, VL640, VL660, VM3080, VM3080 AL, VM3090, VM370, VM4090, VM460, VN2090, VX680, VX7090

REF.519A

CASQUILLO DIAM48

Comp. 944026268

7030M, 7030M H, 8030L, 9040L, 9040M, 9050L L, 9050L SH, 9060L, 9060L GE, 9060L H, 9060L SH, 9070L L, 9070L L T5, 9070L SH, 9070M, 9080L, 9080L GE, 9080L H, 9080L SH, 9090L, 9090L GE, 9090L H, 9090L SH, 9090L SH T4, 9090L SH T5, 9090L T3, 9090X, 9090X GE, 9090X H, 9090X H H, VL5060, VL5080, VL5090, VL550, VL570, VL6040, VL6050, VL6060, VL6070, VL6080, VL6090, VL610, VL620, VL630, VL640, VL660, VM3080, VM3080 AL, VM3090, VM370, VM4090, VM460, VN2090, VX680, VX7090

REF.519B

TORNILLO M14X60ZN

Comp. 944025488

7030M, 7030M H, 8030L, 9030L, 9040L, 9040M, 9050L H, 9050L L, 9050L SH, 9060L, 9060L GE, 9060L H, 9060L SH, 9070L H, 9070L L, 9070L L T5, 9070L SH, 9070M, 9080L, 9080L GE, 9080L H, 9080L SH, 9090L, 9090L GE, 9090L H, 9090L H T4, 9090L H T5, 9090L SH, 9090L SH T4, 9090L SH T5, 9090L T3, 9090X, 9090X GE, 9090X GE T3, 9090X GE T4, 9090X GE T5, 9090X H, 9090X H H, 9090X T3, 9090X T4, 9090X T5, SB65, TL58 I, VL5060, VL5080, VL5090, VL530, VL540, VL550, VL570, VL600, VL6040, VL6050, VL6060, VL6070, VL6080, VL6090, VL610, VL620, VL630, VL640, VL660, VM3080, VM3080 AL, VM3090, VM340, VM370, VM4090, VM460, VX680, VX7090

REF.519C

TORNILLO M14X50ZN

Comp. -

1620, 1620S, 2420, 2520, 2620, 7030M, 7030M H, 8030L, 9030L, 9050L H, 9050L L, 9050L SH, 9070L H, 9070L L, 9070L L T5, 9070L SH, 9070M, 9090L H T4, 9090L H T5, 9090L SH T4, 9090L SH T5, 9090L T3, 9090X GE T3, 9090X GE T4, 9090X GE T5, 9090X T3, 9090X T4, 9090X T5, SB52, SB54, VL5060, VL5080, VL5090, VL530, VL540, VL550, VL570, VL600, VL6040, VL6050, VL6060, VL6070, VL6080, VL6090, VL610, VL620, VL630, VL640, VL660, VM3080, VM3080 AL, VM3090, VM340, VM370, VM4090, VM460, VX680, VX7090

REF.520A

PROTECTOR (inox)

Comp. 944025488

7030M, 7030M H, 8030L, 9040L, 9040M, 9050L L, 9050L SH, 9060L, 9060L GE, 9060L H, 9060L SH, 9070L L, 9070L L T5, 9070L SH, 9070M, 9080L, 9080L GE, 9080L H, 9080L SH, 9090L, 9090L GE, 9090L H, 9090L SH, 9090L SH T4, 9090L SH T5, 9090L T3, 9090X, 9090X GE, 9090X H, 9090X H H, VL5080, VL5090, VL550, VL570, VL6050, VL6060, VL6070, VL6080, VL6090, VL610, VL620, VL630, VL640, VL660, VM3080 AL, VM3090, VM370, VM4090, VM460, VX680, VX7090

REF.521A

CONJUNTO COMPLETO (M. coquilla+M.coquilla+casquillo+2 protectores+2 tornillosM6+2 tuercas M6+1arandelaM14+2 tornillo M14+2 tuerca M14)

Comp.

7030M, 7030M H, 8030L, 9040L, 9040M, 9050L L, 9050L SH, 9060L, 9060L GE, 9060L H, 9060L SH, 9070L L, 9070L L T5, 9070L SH, 9070M, 9080L, 9080L GE, 9080L H, 9080L SH, 9090L, 9090L GE, 9090L H, 9090L SH, 9090L SH T4, 9090L SH T5, 9090L T3, 9090X, 9090X GE, 9090X H, 9090X H H, VL5080, VL5090, VL550, VL570, VL6050, VL6060, VL6070, VL6080, VL6090, VL610, VL620, VL630, VL640, VL660, VM3080 AL, VM3090, VM370, VM4090, VM460, VX680, VX7090,633,6

REF.546B

SOPORTE VARA FIBRA ALUMINIO CON TORNILLOS TUERCAS Y ARANDELAS

Comp. 913001074

1214, 2414, 2514, 2614, 2714, 9090X GE T3, 9090X GE T4, 9090X GE T5, 9090X H, 9090X O, 9090X O GE, 9090X O GE T3, 9090X O GE T4, 9090X O H T4, 9090X O T3, 9090X O T4, 9090X OP, 9090X OP GE, 9090X T3, 9090X T4, 9090X T5, SB65, T140, TB15, VX680, VX7090

REF.207B

BIELA RECTA

Comp. 944035000, 87586176

7030L, 7030M, 7030M H, 8030L, 9030L, 9040L, 9040M, 9050L H, 9050L L, 9050L SH, 9060L, 9060L GE, 9060L H, 9060L SH, 9070L H, 9070L L, 9070L L T5, 9070L SH, 9070M, 9080L, 9080L GE, 9080L H, 9080L SH, 9090L, 9090L GE, 9090L H, 9090L H T4, 9090L H T5, 9090L SH, 9090L SH T4, 9090L SH T5, 9090L T3, 9090X, 9090X GE, 9090X GE T3, 9090X GE T4, 9090X GE T5, 9090X H, 9090X H H, 9090X H T4, 9090X O, 9090X O GE, 9090X O GE T3, 9090X O GE T4, 9090X O GE T5, 9090X O H T4, 9090X O T3, 9090X O T4, 9090X O T5, 9090X OP, 9090X OP GE, 9090X T3, 9090X T4, 9090X T5, , VL5060, VL5080, VL5090, VL530, VL540, VL550, VL570, VL600, VL6040, VL6050, VL6060, VL6070, VL6080, VL6090, VL610, VL620, VL630, VL640, VL660, VM3080, VM3080 AL, VM3090, VM340, VM370, VM4090, VM460, VX680, VX7090

REF.208B

BIELA CURVA

Comp. 944036901, 87586178

7030L, 7030M, 7030M H, 8030L, 9030L, 9040L, 9040M, 9050L H, 9050L L, 9050L SH, 9060L, 9060L GE, 9060L H, 9060L SH, 9070L H, 9070L L, 9070L L T5, 9070L SH, 9070M, 9080L, 9080L GE, 9080L H, 9080L SH, 9090L, 9090L GE, 9090L H, 9090L H T4, 9090L H T5, 9090L SH, 9090L SH T4, 9090L SH T5, 9090L T3, 9090X, 9090X GE, 9090X GE T3, 9090X GE T4, 9090X GE T5, 9090X H, 9090X H H, 9090X H T4, 9090X T3, 9090X T4, 9090X T5, VL5060, VL5080, VL5090, VL550, VL570, VL600, VL6040, VL6050, VL6060, VL6070, VL6080, VL6090, VL610, VL620, VL630, VL640, VL660, VM3080, VM3080 AL, VM3090, VM340, VM370, VM4090, VM460, VX680, VX7090

IVA no incluido

Transporte EU gratuito en pedidos 600€

Todas las marcas comerciales pertenecen a sus respectivos propietarios y su uso es solo informativo.

WWW.EDUARDOREPUESTOSAGRICOLAS.COM

Compruebe las Ref. antes.

NEW HOLLAND-BRAUD
COMPATIBLE

EDUARDO

REF.209B

CASQUILLO BIELA

Comp. 944031036

7030L, 7030M, 7030M H, 8030L, 9030L, 9040L, 9040M, 9050L H, 9050L L, 9050L SH, 9060L, 9060L GE, 9060L H, 9060L SH, 9070L H, 9070L L, 9070L L T5, 9070L SH, 9070M, 9080L, 9080L GE, 9080L H, 9080L SH, 9090L, 9090L GE, 9090L H, 9090L H T4, 9090L H T5, 9090L SH, 9090L SH T4, 9090L SH T5, 9090L T3, 9090X, 9090X GE, 9090X GE T3, 9090X GE T4, 9090X GE T5, 9090X H, 9090X H H, 9090X H T4, 9090X O, 9090X O GE, 9090X O GE T3, 9090X O GE T4, 9090X O GE T5, 9090X O H T4, 9090X O T3, 9090X O T4, 9090X O T5, 9090X OP, 9090X OP GE, 9090X T3, 9090X T4, 9090X T5, VL5060, VL5080, VL5090, VL530, VL540, VL550, VL570, VL600, VL6040, VL6050, VL6060, VL6070, VL6080, VL6090, VL610, VL620, VL630, VL640, VL660, VM3080, VM3080 AL, VM3090, VM340, VM370, VM4090, VM460, VN2090,

REF.209C

ARANDELA BIELA

Comp. 944034949

7030L, 7030M, 7030M H, 8030L, 9030L, 9040L, 9040M, 9050L H, 9050L L, 9050L SH, 9060L, 9060L GE, 9060L H, 9060L SH, 9070L H, 9070L L, 9070L L T5, 9070L SH, 9070M, 9080L, 9080L GE, 9080L H, 9080L SH, 9090L, 9090L GE, 9090L H, 9090L H T4, 9090L H T5, 9090L SH, 9090L SH T4, 9090L SH T5, 9090L T3, 9090X, 9090X GE, 9090X GE T3, 9090X GE T4, 9090X GE T5, 9090X H, 9090X H H, 9090X H T4, 9090X O, 9090X O GE, 9090X O GE T3, 9090X O GE T4, 9090X O GE T5, 9090X O H T4, 9090X O T3, 9090X O T4, 9090X O T5, 9090X OP, 9090X OP GE, 9090X T3, 9090X T4, 9090X T5, VL5060, VL5080, VL5090, VL530, VL540, VL550, VL570, VL600, VL6040, VL6050, VL6060, VL6070, VL6080, VL6090, VL610, VL620, VL630, VL640, VL660, VM3080, VM3080 AL, VM3090, VM340, VM370, VM4090, VM460, VX680, VX7090

REF.209D

BULÓN BIELA

Comp. 944035002

7030L, 7030M, 7030M H, 8030L, 9030L, 9040L, 9040M, 9050L H, 9050L L, 9050L SH, 9060L, 9060L GE, 9060L H, 9060L SH, 9070L H, 9070L L, 9070L L T5, 9070L SH, 9070M, 9080L, 9080L GE, 9080L H, 9080L SH, 9090L, 9090L GE, 9090L H, 9090L H T4, 9090L H T5, 9090L SH, 9090L SH T4, 9090L SH T5, 9090L T3, 9090X, 9090X GE, 9090X GE T3, 9090X GE T4, 9090X GE T5, 9090X H, 9090X H H, 9090X H T4, 9090X O, 9090X O GE, 9090X O GE T3, 9090X O GE T4, 9090X O GE T5, 9090X O H T4, 9090X O T3, 9090X O T4, 9090X O T5, 9090X OP, 9090X OP GE, 9090X T3, 9090X T4, 9090X T5, VL5060, VL5080, VL5090, VL530, VL540, VL550, VL570, VL600, VL6040, VL6050, VL6060, VL6070, VL6080, VL6090, VL610, VL620, VL630, VL640, VL660, VM3080, VM3080 AL, VM3090, VM340, VM370, VM4090, VM460, VX680, VX7090

REF.210B

KIT RECAMBIO BIELA (2 casquillos,1 bulón y 2 arandelas)

Comp. 87639659

7030L, 7030M, 7030M H, 8030L, 9030L, 9040L, 9040M, 9050L H, 9050L L, 9050L SH, 9060L, 9060L GE, 9060L H, 9060L SH, 9070L H, 9070L L, 9070L L T5, 9070L SH, 9070M, 9080L, 9080L GE, 9080L H, 9080L SH, 9090L, 9090L GE, 9090L H, 9090L H T4, 9090L H T5, 9090L SH, 9090L SH T4, 9090L SH T5, 9090L T3, 9090X, 9090X GE, 9090X GE T3, 9090X GE T4, 9090X GE T5, 9090X H, 9090X H H, 9090X H T4, 9090X O, 9090X O GE, 9090X O GE T3, 9090X O GE T4, 9090X O GE T5, 9090X O H T4, 9090X O T3, 9090X O T4, 9090X O T5, 9090X OP, VL5090, VL530, VL540, VL550, VL570, VL600, VL6040, VL6050, VL6060, VL6070, VL6080, VL6090, VL610, VL620, VL630, VL640, VL660

REF.211B

BIELA RECTA+BULON+2ARANDELAS

Comp. -

7030L, 7030M, 7030M H, 8030L, 9030L, 9040L, 9040M, 9050L H, 9050L L, 9050L SH, 9060L, 9060L GE, 9060L H, 9060L SH, 9070L H, 9070L L, 9070L L T5, 9070L SH, 9070M, 9080L, 9080L GE, 9080L H, 9080L SH, 9090L, 9090L GE, 9090L H, 9090L H T4, 9090L H T5, 9090L SH, 9090L SH T4, 9090L SH T5, 9090L T3, 9090X, 9090X GE, 9090X GE T3, 9090X GE T4, 9090X GE T5, 9090X H, 9090X H H, 9090X H T4, 9090X O, 9090X O GE, 9090X O GE T3, 9090X O GE T4, 9090X O GE T5, 9090X O H T4, 9090X O T3, 9090X O T4, 9090X O T5, 9090X OP, 9090X OP GE, 9090X T3, 9090X T4, 9090X T5, , VL5060, VL5080, VL5090, VL530, VL540, VL550, VL570, VL600, VL6040, VL6050, VL6060, VL6070, VL6080, VL6090, VL610, VL620, VL630, VL640, VL660, VM3080, VM3080 AL, VM3090, VM340, VM370, VM4090, VM460, VX680, VX7090

REF.212B

BIELA CURVA+BULON+2ARANDELAS

Comp. -

7030L, 7030M, 7030M H, 8030L, 9030L, 9040L, 9040M, 9050L H, 9050L L, 9050L SH, 9060L, 9060L GE, 9060L H, 9060L SH, 9070L H, 9070L L, 9070L L T5, 9070L SH, 9070M, 9080L, 9080L GE, 9080L H, 9080L SH, 9090L, 9090L GE, 9090L H, 9090L H T4, 9090L H T5, 9090L SH, 9090L SH T4, 9090L SH T5, 9090L T3, 9090X, 9090X GE, 9090X GE T3, 9090X GE T4, 9090X GE T5, 9090X H, 9090X H H, 9090X H T4, 9090X O, 9090X O GE, 9090X O GE T3, 9090X O GE T4, 9090X O GE T5, 9090X O H T4, 9090X O T3, 9090X O T4, 9090X O T5, 9090X OP, 9090X OP GE, 9090X T3, 9090X T4, 9090X T5, , VL5060, VL5080, VL5090, VL530, VL540, VL550, VL570, VL600, VL6040, VL6050, VL6060, VL6070, VL6080, VL6090, VL610, VL620, VL630, VL640, VL660, VM3080, VM3080 AL, VM3090, VM340, VM370, VM4090, VM460, VX680, VX7090

REF.226A

PROTECTOR BIELA NUEVO

Comp. 944027099

7030L, 7030M, 7030M H, 8030L, 9030L, 9040L, 9040M, 9050L H, 9050L L, 9050L SH, 9060L, 9060L GE, 9060L H, 9060L SH, 9070L H, 9070L L, 9070L L T5, 9070L SH, 9070M, 9080L, 9080L GE, 9080L H, 9080L SH, 9090L, 9090L GE, 9090L H, 9090L H T4, 9090L H T5, 9090L SH, 9090L SH T4, 9090L SH T5, 9090L T3, 9090X, 9090X GE, 9090X GE T3, 9090X GE T4, 9090X GE T5, 9090X H, 9090X H H, 9090X H T4, 9090X O, 9090X O GE, 9090X O GE T3, 9090X O GE T4, 9090X O GE T5, 9090X O H T4, 9090X O T3, 9090X O T4, 9090X O T5, VL5080, VL5090, VL550, VL570, VL6050, VL6060, VL6070, VL6080, VL6090, VL610, VL620, VL630, VL640, VL660, VM3080, VM3080 AL, VM3090, VM340, VM370, VM4090, VM460, VX680, VX7090

REF.227A

PROTECTOR SACUDIDOR BIELA

Comp. 944029130

7030L, 7030M, 7030M H, 8030L, 9030L, 9040L, 9040M, 9050L H, 9050L L, 9050L SH, 9060L, 9060L GE, 9060L H, 9060L SH, 9070L H, 9070L L, 9070L L T5, 9070L SH, 9070M, 9080L, 9080L GE, 9080L H, 9080L SH, 9090L, 9090L GE, 9090L H, 9090L H T4, 9090L H T5, 9090L SH, 9090L SH T4, 9090L SH T5, 9090L T3, 9090X, 9090X GE, 9090X GE T3, 9090X GE T4, 9090X GE T5, 9090X H, 9090X H H, 9090X H T4, 9090X O, 9090X O GE, 9090X O GE T3, 9090X O GE T4, 9090X O GE T5, 9090X O H T4, 9090X O T3, 9090X O T4, 9090X O T5, 9090X OP, 9090X OP GE, 9090X T3, 9090X T4, 9090X T5, S833, SB35, SB53, SB55, VL5060, VL5080, VL5090, VL530, VL540, VL550, VL570, VL600, VL6040, VL6050, VL6060, VL6070, VL6080, VL6090, VL610, VL620, VL630, VL640, VL660, VM3080, VM3080 AL, VM3090, VM340, VM370, VM4090, VM460, VN2090, VN300, VX680, VX7090

REF.263A

PROTECCION SACUDIDOR (pieza grande)

Comp. 944001181

1620, 1620S, 2420, 2520, 2620, 2720, 7030L, 7030M, 7030M H, 8030L, 9030L, 9040L, 9040M, 9050L H, 9050L L, 9050L SH, 9060L, 9060L GE, 9060L H, 9060L SH, 9070L H, 9070L L, 9070L L T5, 9070L SH, 9070M, 9080L, 9080L GE, 9080L H, 9080L SH, 9090L, 9090L GE, 9090L H, 9090L H T4, 9090L H T5, 9090L SH, 9090L SH T4, 9090L SH T5, 9090L T3, 9090X, 9090X GE, 9090X GE T3, 9090X GE T4, 9090X GE T5, 9090X H, 9090X H H, 9090X H T4, 9090X O, 9090X O GE, 9090X O GE T3, 9090X O GE T4, 9090X O GE T5, 9090X O H T4, 9090X O T3, 9090X O T4, 9090X O T5, 9090X OP, 9090X OP GE, 9090X T3, 9090X T4, 9090X T5, S833, SB35, SB36, SB52, SB53, SB54, SB55, SB56, SB58, SB60, SB62, SB64, SB65, VL5060, VL5080, VL5090, VL530, VL540, VL550, VL570, VL600, VL6040, VL6050, VL6060, VL6070, VL6080, VL6090, VL610, VL620, VL630, VL640, VL660, VM3080, VM3080 AL, VM3090, VM340, VM370, VM4090, VM460, VN2080, VN2090, VN300, VX680, VX7090

REF.286A

KIT COMPLETO BIELA RECTA NUEVA

Comp. -

VL5060 ,VL6040 ,7030L ,8030L ,9070L L ,9050L L ,9040L ,9090X GE T4 ,9090X T4 ,9090X H T4 ,9090X GE T5 ,9090X T5 ,9060L ,9030L ,VL530 ,VL540 ,VL600 ,SB33 ,SB35 ,SB53 ,SB55 ,9090X GE T3 ,9090X T3 ,9090L T3 ,9070L L T5

REF.286B

KIT COMPLETO BIELA CURVA NUEVA

Comp. -

VL5060 ,VL6040 ,7030L ,8030L ,9070L L ,9050L L ,9040L ,9090X GE T4 ,9090X T4 ,9090X H T4 ,9090X GE T5 ,9090X T5 ,9060L ,9030L ,VL530 ,VL540 ,VL600 ,SB33 ,SB35 ,SB53 ,SB55 ,9090X GE T3 ,9090X T3 ,9090L T3 ,9070L L T5

REF.287A

KIT COMPLETO BIELA RECTA VIEJA SUSTITUCION BIELA METALICA

Comp. -

VL5080 ,VL5090 ,VL6050 ,VL6060 ,VL6080 ,VL6090 ,VM3080 AL ,VM3090 ,VM370 ,VM4090 ,VM460 ,VX7090 ,7030L ,7030M ,8030L ,9080L GE ,9080L ,9080L H ,9080L SH ,9090L ,9090L H ,9090L SH ,9050L H ,9090L H T4 ,9070L H ,9070L L ,9050L L ,9040L ,9060L GE ,9060L H ,9060L SH ,9070M ,9040M ,9090X O H T4 ,9090X GE ,9090X ,9090X H ,9090X GE T4 ,9090X T4 ,9090X H T4 ,9090X GE T5 ,9090X T5 ,VL640 ,VL660 ,VX680 ,9060L ,9030L ,VL550 ,VL570 ,9090L GE ,VL6070 ,VL610 ,VL620 ,VL630 ,9090L H T5 ,9090L SH T4 ,9090X H H ,9090X GE T3 ,9090X T3 ,9090L T3 ,9090L SH T5 ,7030M H ,9050L SH ,9070L SH ,9070L L T5 ,

REF.287B

KIT COMPLETO BIELA CURVAVIEJA SUSTITUCION BIELA METALICA

Comp. -

VL5080 ,VL5090 ,VL6050 ,VL6060 ,VL6080 ,VL6090 ,VM3080 AL ,VM3090 ,VM370 ,VM4090 ,VM460 ,VX7090 ,7030L ,7030M ,8030L ,9080L GE ,9080L ,9080L H ,9080L SH ,9090L ,9090L H ,9090L SH ,9050L H ,9090L H T4 ,9070L H ,9070L L ,9050L L ,9040L ,9060L GE ,9060L H ,9060L SH ,9070M ,9040M ,9090X O H T4 ,9090X GE ,9090X ,9090X H ,9090X GE T4 ,9090X T4 ,9090X H T4 ,9090X GE T5 ,9090X T5 ,VL640 ,VL660 ,VX680 ,9060L ,9030L ,VL550 ,VL570 ,9090L GE ,VL6070 ,VL610 ,VL620 ,VL630 ,9090L H T5 ,9090L SH T4 ,9090X H H ,9090X GE T3 ,9090X T3 ,9090L T3 ,9090L SH T5 ,7030M H ,9050L SH ,9070L SH ,9070L L T5 ,

REF.290A

PROTECCION SACUDIDOR (pieza pequeña) (orificios compatibles hexagonales)

Comp. 920017521

1620, 1620S, 2420, 2520, 2620, 2720, 7030L, 7030M, 7030M H, 8030L, 9030L, 9040L, 9040M, 9050L H, 9050L L, 9050L SH, 9060L, 9060L GE, 9060L H, 9060L SH, 9070L H, 9070L L, 9070L L T5, 9070L SH, 9070M, 9080L, 9080L GE, 9080L H, 9080L SH, 9090L, 9090L GE, 9090L H, 9090L H T4, 9090L H T5, 9090L SH, 9090L SH T4, 9090L SH T5, 9090L T3, 9090X, 9090X GE, 9090X GE T3, 9090X GE T4, 9090X GE T5, 9090X H, 9090X H H, 9090X H T4, 9090X O H T4, 9090X T3, 9090X T4, 9090X T5, S833, SB35, SB36, SB52, SB53, SB54, SB55, SB56, SB58, SB60, SB62, SB64, SB65, VL5060, VL5080, VL5090, VL530, VL540, VL550, VL570, VL600, VL6040, VL6050, VL6060, VL6070, VL6080, VL6090, VL610, VL620, VL630, VL640, VL660, VM3080, VM3080 AL, VM3090, VM340, VM370, VM4090, VM460, VN2090, VN300, VX680, VX7090

REF.290B

PROTECCION SACUDIDOR (pieza pequeña) (orificios circulares)

Comp. 944025756

7030M, 7030M H, 8030L, 9040L, 9040M, 9050L H, 9050L L, 9050L SH, 9060L, 9060L GE, 9060L H, 9060L SH, 9070L H, 9070L L, 9070L L T5, 9070L SH, 9070M, 9080L, 9080L GE, 9080L H, 9080L SH, 9090L, 9090L GE, 9090L H, 9090L H T4, 9090L H T5, 9090L SH, 9090L SH T4, 9090L SH T5, 9090L T3, 9090X, 9090X GE, 9090X GE T3, 9090X GE T4, 9090X GE T5, 9090X H, 9090X H H, 9090X H T4, 9090X O, 9090X O GE, 9090X O GE T3, 9090X O GE T4, 9090X O GE T5, 9090X O H T4, 9090X O T3, 9090X O T4, 9090X O T5, 9090X OP, 9090X OP GE, 9090X T3, 9090X T4, 9090X T5, VL5060, VL5080, VL5090, VL530, VL540, VL550, VL570, VL6040, VL6050, VL6060, VL6070, VL6080, VL6090, VL610, VL620, VL630, VL640, VL660, VM3080, VM3080 AL, VM3090, VM370, VM4090, VM460, VN2090, VX680, VX7090

REF.291A

CHAPA SACUDIDOR BIELA (trasero)

Comp. 944007696

1620, 1620S, 2420, 2520, 2620, 2720, 7030L, 7030M, 7030M H, 8030L, 9030L, 9040L, 9040M, 9050L H, 9050L L, 9050L SH, 9060L, 9060L GE, 9060L H, 9060L SH, 9070L H, 9070L L, 9070L L T5, 9070L SH, 9070M, 9080L, 9080L GE, 9080L H, 9080L SH, 9080N H, 9080N L, 9090L, 9090L GE, 9090L H, 9090L H T4, 9090L H T5, 9090L SH, 9090L SH T4, 9090L SH T5, 9090L T3, 9090X, 9090X GE, 9090X GE T3, 9090X GE T4, 9090X GE T5, 9090X H, 9090X H H, 9090X H T4, 9090X O, 9090X O GE, 9090X O GE T3, 9090X O GE T4, 9090X O GE T5, 9090X O H T4, 9090X O T3, 9090X O T4, 9090X O T5, 9090X OP, 9090X OP GE, 9090X T3, 9090X T4, 9090X T5, S833, SB35, SB36, SB52, SB53, SB54, SB55, SB56, SB58, SB60, SB62, SB64, SB65, VL5060, VL5080, VL5090, VL530, VL540, VL550, VL570, VL600, VL6040, VL6050, VL6060, VL6070, VL6080, VL6090, VL610, VL620, VL630, VL640, VL660, VM3080, VM3080 AL, VM3090, VM340, VM370, VM4090, VM460, VN2080, VN2090, VN240, VN260, VN300, VX680, VX7090

REF.292A

PLACA KIT BIELA PLANO

Comp. 944027125

7030L, 7030M, 7030M H, 8030L, 9030L, 9040L, 9040M, 9050L H, 9050L L, 9050L SH, 9060L, 9060L GE, 9060L H, 9060L SH, 9070L H, 9070L L, 9070L L T5, 9070L SH, 9070M, 9080L, 9080L GE, 9080L H, 9080L SH, 9090L, 9090L GE, 9090L H, 9090L H T4, 9090L H T5, 9090L SH, 9090L SH T4, 9090L SH T5, 9090L T3, 9090X, 9090X GE, 9090X GE T3, 9090X GE T4, 9090X GE T5, 9090X H, 9090X H H, 9090X H T4, 9090X O, 9090X O GE, 9090X O GE T3, 9090X O GE T4, 9090X O GE T5, 9090X O H T4, 9090X O T3, 9090X O T4, 9090X O T5, 9090X OP, 9090X OP GE, 9090X T3, 9090X T4, 9090X T5, S833, SB35, SB53, SB55, VL5060, VL5080, VL5090, VL530, VL540, VL550, VL570, VL600, VL6040, VL6050, VL6060, VL6070, VL6080, VL6090, VL610, VL620, VL630, VL640, VL660, VM3080, VM3080 AL, VM3090, VM340, VM370, VM4090, VM460, VX680, VX7090

REF.297A

PROTECTOR BIELA NUEVO sup

Comp. 944026496

7030L, 7030M, 7030M H, 8030L, 9030L, 9040L, 9040M, 9050L H, 9050L L, 9050L SH, 9060L, 9060L GE, 9060L H, 9060L SH, 9070L H, 9070L L, 9070L L T5, 9070L SH, 9070M, 9080L, 9080L GE, 9080L H, 9080L SH, 9090L, 9090L GE, 9090L H, 9090L H T4, 9090L H T5, 9090L SH, 9090L SH T4, 9090L SH T5, 9090L T3, 9090X, 9090X GE, 9090X GE T3, 9090X GE T4, 9090X GE T5, 9090X H, 9090X H H, 9090X H T4, 9090X O, 9090X O GE, 9090X O GE T3, 9090X O GE T4, 9090X O GE T5, 9090X O H T4, 9090X O T3, 9090X O T4, 9090X O T5, 9090X OP, 9090X OP GE, 9090X T3, 9090X T4, 9090X T5, VL5060, VL5080, VL5090, VL530, VL540, VL550, VL570, VL600, VL6040, VL6050, VL6060, VL6070, VL6080, VL6090, VL610, VL620, VL630, VL640, VL660, VM3080, VM3080 AL, VM3090, VM370, VM4090, VM460, VN2090, VX680, VX7090

REF.298A

SOPORTE BIELA PARA 2 TORNILLOS

Comp. 944026586

7030L, 8030L, 9030L, 9040L, 9050L L, 9060L, 9070L L, 9070L L T5, 9090L T3, 9090X GE T3, 9090X GE T4, 9090X GE T5, 9090X H T4, 9090X T3, 9090X T4, 9090X T5, SB33, SB35, SB53, SB55, VL5060, VL530, VL540, VL600, VL6040

REF.717A

SOPORTE SIN-FIN

Comp. 944005665

7030L, 7030M, 7030M H, 8030L, 9030L, 9040L, 9040M, 9050L H, 9050L L, 9060L, 9060L GE, 9060L H, 9070L H, 9070L L, 9070L L T5, 9070M, 9080L, 9080L GE, 9080L H, 9090L, 9090L GE, 9090L H, 9090L H T4, 9090L H T5, 9090L T3, 9090X, 9090X GE, 9090X GE T3, 9090X GE T4, 9090X GE T5, 9090X H, 9090X H H, 9090X H T4, 9090X O, 9090X O GE, 9090X O GE T3, 9090X O GE T4, 9090X O GE T5, 9090X O H T4, 9090X O T3, 9090X O T4, 9090X O T5, 9090X OP, 9090X OP GE, 9090X T3, 9090X T4, 9090X T5, S833, SB35, SB36, SB53, SB55, SB56, SB58, SB60, SB62, SB64, SB65, VL5060, VL5080, VL5090, VL530, VL540, VL550, VL570, VL600, VL6040, VL6050, VL6060, VL6070, VL6080, VL6090, VL610, VL620, VL630, VL640, VL660, VM3080, VM3080 AL, VM3090, VM340, VM370, VM4090, VM460, VN2090, VN260, VN300, VX680, VX7090

Compruebe las Ref. antes.

Todas las marcas comerciales pertenecen a sus respectivos propietarios y su uso es solo informativo.

WWW.EDUARDOREPUESTOSAGRICOLAS.COM

IVA no incluido

Transporte EU gratuito en pedidos 600€

NEW HOLLAND-BRAUD COMPATIBLE

EDUARDO

REF.293A

CINTA VL/VM/VX/SB (600mm x 1.145mm) 14orificios

Comp. 944026645,,944009230

SB36, SB56, SB58, SB60, SB62, SB64, SB65, VL600, VL6040, VL6050, VL6060, VL6070, VL6080, VL6090, VL610, VL620, VL630, VL640, VL660, VM4090, VM460, VX680, VX7090

REF.293B

CINTA SB33/35/53/55 (450mm x 1.145mm) 1 canal 10 orificios

Comp. 944010278

SB33, SB35, SB53, SB55, VL530

REF.293C

CINTA VL9000L/9000X (700mm x 1.327mm)17 orificios

Comp. 84193392

9030L, 9040L, 9050L H, 9050L L, 9060L, 9060L GE, 9060L H, 9060L SH, 9070L H, 9070L L, 9070L L T5, 9080L, 9080L GE, 9080L H, 9080L SH, 9090L, 9090L H, 9090L H T4, 9090L H T5, 9090L T3, 9090X, 9090X H, 9090X H T4, 9090X T3, 9090X T4, 9090X T5

REF.293D

CINTA 9090 OLIVE CENTRAL (450mmx2.161mm)10 orificios

Comp. 84321610

9090X O, 9090X O GE, 9090X O GE T3, 9090X O GE T4, 9090X O GE T5, 9090X O H T4, 9090X O T3, 9090X O T4, 9090X O T5, 9090X OP, 9090X OP GE, VX7090

REF.293E

CINTA 9090 OLIVE LATERAL(225mm x 1.690mm) 5 orificios

Comp. 84324465

9090X O, 9090X O H T4, 9090X O T3, 9090X O T4, 9090X O T5, 9090X OP, VX7090

REF.293G

ROLLO CINTA de 2 lonas (3,2mm) 450mm x 1m

Comp. -

1214, 1620, 1620S, 2414, 2420, 2514, 2520, 2614, 2620, 2714, 2720, 7030L, 7030M, 7030M H, 8030L, 9030L, 9040L, 9040M, 9050L H, 9050L L, 9050L SH, 9060L, 9060L GE, 9060L H, 9060L SH, 9070L H, 9070L L, 9070L L T5, 9070L SH, 9070M, 9080L, 9080L GE, 9080L H, 9080L SH, 9080N H, 9080N L, 9090L, 9090L GE, 9090L H, 9090L H T4, 9090L H T5, 9090L SH, 9090L SH T4, 9090L SH T5, 9090L T3, 9090X, 9090X GE, 9090X GE T3, 9090X GE T4, 9090X GE T5, 9090X H, 9090X H H, 9090X H T4, 9090X O, 9090X O GE, 9090X O GE T3, 9090X O GE T4, 9090X O GE T5, 9090X O H T4, 9090X O T3, 9090X O T4, 9090X O T5, 9090X OP, 9090X OP GE, 9090X T3, 9090X T4, 9090X T5, SB33, SB35, SB36, SB52, SB53, SB54, SB55, SB56, SB58, SB60, SB62, SB64, SB65, VL5060, VL5080, VL5090, VL530, VL540, VL550, VL570, VL600, VL6040, VL6050, VL6060, VL6070, VL6080, VL6090, VL610, VL620, VL630, VL640, VL660, VM3080, VM3080 AL, VM3090, VM340, VM370, VM4090, VM460, VN2080, VN2090, VN240, VN260, VN300, VX680, VX7090

REF.293I

CINTA SB52/54(450mmx1.145mm)2 canales extremos inf. 10 orif.

Comp. 913475510

1214, 1620, 1620S, 2414, 2420, 2514, 2520, 2614, 2620, 2714, 2720, SB52, SB54

REF.293N

CINTA (600mm x 1.310) 14 orificios

Comp. 84358254

8030 L, 8030 L T5, 9060 L SH, 9080 L SH, 9090 L SH

REF.293K

ENTRADA-LONA

Comp. 944027604

SB56, SB58, SB60, SB62, SB64, VL600, VL6040, VL6050, VL6060, VL6070, VL6080, VL6090, VL610, VL620, VL630, VL640, VL660, VM4090, VM460, VX680, VX7090

REF.293L

ROLLO CINTA de 3 lonas (4,2mm) 450mm x 1m

Comp. -

1214, 1620, 1620S, 2414, 2420, 2514, 2520, 2614, 2620, 2714, 2720, 7030L, 7030M, 7030M H, 8030L, 9030L, 9040L, 9040M, 9050L H, 9050L L, 9050L SH, 9060L, 9060L GE, 9060L H, 9060L SH, 9070L H, 9070L L, 9070L L T5, 9070L SH, 9070M, 9080L, 9080L GE, 9080L H, 9080L SH, 9080N H, 9080N L, 9090L, 9090L GE, 9090L H, 9090L H T4, 9090L H T5, 9090L SH, 9090L SH T4, 9090L SH T5, 9090L T3, 9090X, 9090X GE, 9090X GE T3, 9090X GE T4, 9090X GE T5, 9090X H, 9090X H H, 9090X H T4, 9090X O, 9090X O GE, 9090X O GE T3, 9090X O GE T4, 9090X O GE T5, 9090X O H T4, 9090X O T3, 9090X O T4, 9090X O T5, 9090X OP, 9090X OP GE, 9090X T3, 9090X T4, 9090X T5, SB33, SB35, SB36, SB52, SB53, SB54, SB55, SB56, SB58, SB60, SB62, SB64, SB65, VL5060, VL5080, VL5090, VL530, VL540, VL550, VL570, VL600, VL6040, VL6050, VL6060, VL6070, VL6080, VL6090, VL610, VL620, VL630, VL640, VL660, VM3080, VM3080 AL, VM3090, VM340, VM370, VM4090, VM460, VN2080, VN2090, VN240, VN260, VN300, VX680, VX7090

REF.293M

CINTA (700mm x 1.135mm)17 orificios

Comp. 84193393

9040M, 9060L GE, 9070M, 9080L GE, 9090L GE, 9090X GE, 9090X H H

REF.294B

UNIÓN EN L CINTA 14 ORIFICIOS (inox)

Comp. 944005402

8030L, 9050L SH, 9060L SH, 9070L SH, 9080L SH, 9090L SH, 9090L SH T4, 9090L SH T5, SB36, SB56, SB58, SB60, SB62, SB64, SB65, VL600, VL6040, VL6050, VL6060, VL6070, VL6080, VL6090, VL610, VL620, VL630, VL640, VL660, VM4090, VM460, VX680, VX7090

REF.294C

UNIÓN EN L CINTA 10 ORIFICIOS (inox)

Comp. 944010278

SB33, SB35, SB53, SB55

REF.294D

UNIÓN EN L CINTA 17 ORIFICIOS(inox)

Comp. 84199473

9090X, 9090X H

REF.294E

UNIÓN EN L CINTA 5 ORIFICIOS (inox)

Comp. 944035544

9090X O, 9090X O GE, 9090X O GE T3, 9090X O GE T4, 9090X O GE T5, 9090X O H T4, 9090X O T3, 9090X O T4, 9090X O T5, 9090X OP, 9090X OP GE, VN2080, VX7090

REF.294F

FIJADOR CINTA 14 ORIFICIOS (en alum)

Comp. 944005400

8030L, 9050L SH, 9060L SH, 9070L SH, 9080L SH, 9090L SH, 9090L SH T4, 9090L SH T5, SB36, SB56, SB58, SB60, SB62, SB64, SB65, VL600, VL6040, VL6050, VL6060, VL6070, VL6080, VL6090, VL610, VL620, VL630, VL640, VL660, VM4090, VM460, VX680, VX7090

REF.294G

FIJADOR CINTA 10 ORIFICIOS(en alum)

Comp. 944010278

SB33, SB35, SB53, SB55

REF.294H

FIJADOR CINTA 17 ORIFICIOS (alum)

Comp. 84199474

9030L, 9040L, 9040M, 9050L H, 9050L L, 9060L, 9060L GE, 9060L H, 9070L H, 9070L L, 9070L L T5, 9070M, 9080L, 9080L GE, 9080L H, 9090L, 9090L GE, 9090L H, 9090L H T4, 9090L H T5, 9090L T3, 9090X, 9090X GE, 9090X GE T3, 9090X GE T4, 9090X GE T5, 9090X H, 9090X H H, 9090X H T4, 9090X T3, 9090X T4, 9090X T5

REF.294I

FIJADOR CINTA 5 ORIFICIOS (alum)

Comp. 944035543

9090X O, 9090X O GE, 9090X O GE T3, 9090X O GE T4, 9090X O GE T5, 9090X O H T4, 9090X O T3, 9090X O T4, 9090X O T5, 9090X OP, 9090X OP GE, VN2080, VX7090

REF.502B

TORNILLO+TUERCA autoblocant UNION CINTA M5-20MM

Comp. 10978280+920008123

1214, 1620, 1620S, 2414, 2420, 2514, 2520, 2614, 2620, 2714, 2720, 7030L, 7030M, 7030M H, 8030L, 9030L, 9040L, 9040M, 9050L H, 9050L L, 9050L SH, 9060L, 9060L GE, 9060L H, 9060L SH, 9070L H, 9070L L, 9070L L T5, 9070L SH, 9070M, 9080L, 9080L GE, 9080L H, 9080L SH, 9080N H, 9080N L, 9090L, 9090L GE, 9090L H, 9090L H T4, 9090L H T5, 9090L SH, 9090L SH T4, 9090L SH T5, 9090L T3, 9090X, 9090X GE, 9090X GE T3, 9090X GE T4, 9090X GE T5, 9090X H, 9090X H H, 9090X H T4, 9090X O, 9090X O GE, 9090X O GE T3, 9090X O GE T4, 9090X O GE T5, 9090X O H T4, 9090X O T3, 9090X O T4, 9090X O T5, 9090X OP, 9090X OP GE, 9090X T3, 9090X T4, 9090X T5, SB33, SB35, SB36, SB52, SB53, SB54, SB55, SB56, SB58, SB60, SB62, SB64, SB65, VL5060, VL5080, VL5090, VL530, VL540, VL550, VL570, VL600, VL6040, VL6050, VL6060, VL6070, VL6080, VL6090, VL610, VL620, VL630, VL640, VL660, VM3080, VM3080 AL, VM3090, VM340, VM370, VM4090, VM460, VN2080, VN2090, VN240, VN260, VN300, VX680, VX7090,0,28

IVA no incluido

Transporte EU gratuito en pedidos 600€

Todas las marcas comerciales pertenecen a sus respectivos propietarios y su uso es solo informativo.

WWW.EDUARDOREPUESTOSAGRICOLAS.COM

Compruebe las Ref. antes.

NEW HOLLAND-BRAUD COMPATIBLE

EDUARDO

REF.295A

RODILLO MOTOR LARGO 600MM

Comp. 944005403

SB36, SB56, SB58, SB60, SB62, SB64, SB65, VL600, VL6040, VL6050, VL6060, VL6070, VL6080, VL6090, VL610, VL620, VL630, VL640, VL660, VM4090, VM460, VX680, VX7090

REF.295B

RODILLO REENVIO LARGO 600MM

Comp. 944034674

VL600, VL6040, VL6050, VL6060, VL6070, VL6080, VL6090, VL610, VL620, VL630, VL640, VL660, VM4090, VM460, VX680, VX7090

REF.295C

RODILLO MOTOR CORTO 450MM

Comp. 944010279

7030M, 7030M H, 8030L, 9090X O, 9090X O GE, 9090X O GE T3, 9090X O GE T4, 9090X O GE T5, 9090X O H T4, 9090X O T3, 9090X O T4, 9090X O T5, 9090X OP, 9090X OP GE, SB33, SB35, SB53, SB55, SB65, VL5060, VL5080, VL5090, VL530, VL540, VL550, VL570, VM3080, VM3080 AL, VM3090, VM340, VM370, VN2080, VN2090, VN300, VX7090

REF.295P

RODILLO REENVIO CORTO 450MM

Comp. 944034672

7030M, 7030M H, 8030L, 9060L GE, 9080L GE, 9090L GE, 9090X GE, 9090X O, 9090X O GE, 9090X O GE T3, 9090X O GE T4, 9090X O GE T5, 9090X O H T4, 9090X O T3, 9090X O T4, 9090X O T5, 9090X OP, 9090X OP GE, VL5060, VL5080, VL5090, VL530, VL540, VL550, VL570, VM3080, VM3080 AL, VM3090, VM340, VM370, VN2080, VN2090, VN300, VX7090

REF.295Q

RODILLO MOTOR LARGO 700MM

Comp. 84193395

9030L, 9040L, 9040M, 9050L H, 9050L L, 9060L, 9060L GE, 9060L H, 9070L H, 9070L L, 9070L L T5, 9070M, 9080L, 9080L GE, 9080L H, 9090L, 9090L GE, 9090L H, 9090L H T4, 9090L H T5, 9090L T3, 9090X, 9090X GE, 9090X GE T3, 9090X GE T4, 9090X GE T5, 9090X H, 9090X H H, 9090X H T4, 9090X T3, 9090X T4, 9090X T5

REF.295R

RODILLO REENVIO LARGO 700MM

Comp. 84193394

9030L, 9040L, 9040M, 9050L H, 9050L L, 9060L, 9060L GE, 9060L H, 9070L H, 9070L L, 9070L L T5, 9070M, 9080L, 9080L GE, 9080L H, 9090L, 9090L GE, 9090L H, 9090L H T4, 9090L H T5, 9090L T3, 9090X, 9090X GE, 9090X GE T3, 9090X GE T4, 9090X GE T5, 9090X H, 9090X H H, 9090X H T4, 9090X T3, 9090X T4, 9090X T5

REF.295S

RODILLO MOTOR CORTO 225MM

Comp. 944035528

9090X O, 9090X O GE T3, 9090X O H T4, 9090X O T3, 9090X O T4, 9090X O T5, 9090X OP, VN2080, VX7090

REF.295T

RODILLO REENVIO CORTO 225MM

Comp. 84343365

9090X O, 9090X O GE, 9090X O GE T3, 9090X O GE T4, 9090X O GE T5, 9090X O H T4, 9090X O T3, 9090X O T4, 9090X O T5, 9090X OP, 9090X OP GE, VX7090

REF.295D

RODILLO MOTOR CORTO 450MM

Comp. 913308630

1214, 1620, 1620S, 2414, 2420, 2514, 2520, 2614, 2620, 2714, 2720, SB52, SB54

REF.547A

GOMA REGLETA LIMPIEZA

Comp. 944005421 / 84196271

SB36, SB56, SB58, SB60, SB62, SB64, SB65, VL600, VL6040, VL6050, VL6060, VL6070, VL6080, VL6090, VL610, VL620, VL630, VL640, VL660, VM4090, VM460, VX680, VX7090

REF.547B

BABERO DE CAUCHO (SB64,60,58,65)

Comp. 944005420

SB33, SB35, SB36, SB53, SB55, SB56, SB58, SB60, SB62, SB64, SB65, VN240, VN260

REF.556A

LIMPIADOR CENTRAL RODILLOS

Comp. 944007948

7030L, 7030M, 7030M H, 8030L, 9030L, 9040L, 9040M, 9050L H, 9050L L, 9050L SH, 9060L, 9060L GE, 9060L H, 9060L SH, 9070L H, 9070L L, 9070L L T5, 9070L SH, 9070M, 9080L, 9080L GE, 9080L H, 9080L SH, 9080N H, 9080N L, 9090L, 9090L GE, 9090L H, 9090L H T4, 9090L H T5, 9090L SH, 9090L SH T4, 9090L SH T5, 9090L T3, 9090X, 9090X GE, 9090X GE T3, 9090X GE T4, 9090X GE T5, 9090X H, 9090X H H, 9090X H T4, 9090X T3, 9090X T4, 9090X T5, SB33, SB35, SB36, SB53, SB55, SB56, SB58, SB60, SB62, SB64, SB65, VL5060, VL5080, VL5090, VL530, VL540, VL550, VL570, VL600, VL6040, VL6050, VL6060, VL6070, VL6080, VL6090, VL610, VL620, VL630, VL640, VL660, VM3080, VM3080 AL, VM3090, VM340, VM370, VM4090, VM460, VN2080, VN2090, VN240, VN260, VN300, VX680, VX7090

REF.579E

COJINETE DESPALILLADORA 2004RHS(20X47X14)

Comp. 84330054

11.90, 9000

REF.570A

COJINETE EJES Ø25 RODILLOS-CINTAS

Comp. 920019044,84287485

1214, 1620, 1620S, 2414, 2420, 2514, 2520, 2614, 2620, 2714, 2720, 7030L, 7030M, 7030M H, 8030L, 9030L, 9040L, 9040M, 9050L H, 9050L L, 9050L SH, 9060L, 9060L GE, 9060L H, 9060L SH, 9070L H, 9070L L, 9070L L T5, 9070L SH, 9070M, 9080L, 9080L GE, 9080L H, 9080L SH, 9080N H, 9080N L, 9090L, 9090L GE, 9090L H, 9090L H T4, 9090L H T5, 9090L SH, 9090L SH T4, 9090L SH T5, 9090L T3, 9090X, 9090X GE, 9090X GE T3, 9090X GE T4, 9090X GE T5, 9090X H, 9090X H H, 9090X H T4, 9090X O GE, 9090X O GE T3, 9090X O GE T4, 9090X O GE T5, 9090X OP GE, 9090X T3, 9090X T4, 9090X T5, SB33, SB35, SB36, SB52, SB53, SB54, SB55, SB56, SB58, SB60, SB62, SB64, SB65, T140, T240, TB10, TB15, VL5060, VL5080, VL5090, VL530, VL540, VL550, VL570, VL600, VL6040, VL6050, VL6060, VL6070, VL6080, VL6090, VL610, VL620, VL630, VL640, VL660, VM3080, VM3080 AL, VM3090, VM340, VM370, VM4090, VM460, VN2080, VN2090, VN240, VN260, VN300, VX680, VX7090

REF.570L

COJINETE Ø20x14 DESPALILLADORA

Comp. 84287484

7030M, 7030M H, 8030L, 9040L, 9040M, 9060L, 9060L GE, 9060L H, 9060L SH, 9080L, 9080L GE, 9080L H, 9080L SH, 9090L, 9090L GE, 9090L H, 9090L SH, 9090X, 9090X GE, 9090X H, 9090X H H, SB33, SB35, SB36, SB52, SB53, SB54, SB55, SB56, SB58, SB60, SB62, SB64, SB65, VL5060, VL5080, VL5090, VL530, VL540, VL550, VL570, VL600, VL6040, VL6050, VL6060, VL6070, VL6080, VL6090, VL610, VL620, VL630, VL640, VL660, VM3080, VM3080 AL, VM3090, VM340, VM370, VM4090, VM460, VN2090, VN300, VX680, VX7090

REF.570M

COJINETE Ø30x18 DESPALILLADORA SOPORTE MOTOR

Comp. 84287487

7030M, 7030M H, 8030L, 9040L, 9040M, 9060L, 9060L GE, 9060L H, 9060L SH, 9080L, 9080L GE, 9080L H, 9080L SH, 9090L, 9090L GE, 9090L H, 9090L SH, 9090X, 9090X GE, 9090X H, 9090X H H, SB33, SB35, SB36, SB52, SB53, SB54, SB55, SB56, SB58, SB60, SB62, SB64, SB65, VL5060, VL5080, VL5090, VL530, VL540, VL550, VL570, VL600, VL6040, VL6050, VL6060, VL6070, VL6080, VL6090, VL610, VL620, VL630, VL640, VL660, VM3080, VM3080 AL, VM3090, VM340, VM370, VM4090, VM460, VN2090, VN300, VX680, VX7090

REF.579A

PROTECTORES DE CINTAS

Comp. 920019046

7030L, 7030M, 7030M H, 8030L, 9030L, 9040L, 9040M, 9050L H, 9050L L, 9050L SH, 9060L, 9060L GE, 9060L H, 9060L SH, 9070L H, 9070L L, 9070L L T5, 9070L SH, 9070M, 9080L, 9080L GE, 9080L H, 9080L SH, 9080N H, 9080N L, 9090L, 9090L GE, 9090L H, 9090L H T4, 9090L H T5, 9090L SH, 9090L SH T4, 9090L SH T5, 9090L T3, 9090X, 9090X GE, 9090X GE T3, 9090X GE T4, 9090X GE T5, 9090X H, 9090X H H, 9090X H T4, 9090X O, 9090X O GE T3, 9090X O T3, 9090X O T4, 9090X OP, 9090X T3, 9090X T4, 9090X T5, SB33, SB35, SB53, SB55, SB65, T140, T240, VL5060, VL5080, VL5090, VL530, VL540, VL550, VL570, VL600, VL6040, VL6050, VL6060, VL6070, VL6080, VL6090, VL610, VL620, VL630, VL640, VL660, VM3080, VM3080 AL, VM3090, VM340, VM370, VM4090, VM460, VN2080, VN2090, VN300, VX680, VX7090

REF.570Q

¡ NUEVO !

COJINETE EJES Ø25 1 CUELLO

Comp. -

7030M, 7030M H, 8030L, 9040L, 9040M, 9060L, 9060L GE, 9060L H, 9060L SH, 9080L, 9080L GE, 9080L H, 9080L SH, 9090L, 9090L GE, 9090L H, 9090L SH, 9090X, 9090X GE, 9090X H, 9090X H H0, VL6070, VL6080, VL6090, VL610, VL620, VL630, VL640, VL660, VM3080, VM3080 AL, VM3090, VM340, VM370, VM4090, VM460, VN2090, VN300, VX680, VX7090

REF.579C

¡ NUEVO !

COJINTE CON BRIDA DIAM20

Comp. 84321506

11.90,7.30L,7030L,7030M,8.50L,8030L,9030L,9040L,9040M,9050L,9060L,9070L,9070M,9080L,9080N,9090L,9090X

REF.579D

¡ NUEVO !

COJINTE CON BRIDA DIAM25

Comp. 84321507

7030L,7030M, 8.50L,8030L,9030L,9040L,9040M,9050L, 9060L,9070L,9070M,9080L,9080N,9090L ,9090X

Compruebe las Ref. antes.

Todas las marcas comerciales pertenecen a sus respectivos propietarios y su uso es solo informativo.

WWW.EDUARDOREPUESTOSAGRICOLAS.COM

IVA no incluido

Transporte EU gratuito en pedidos 600€

REF.213B

DEDO DESPALILLADORA LARGO

Comp. 944027438

9030L, 9040L, 9040M, 9050L H, 9050L L, 9050L SH, 9060L, 9060L GE, 9060L H, 9060L SH, 9070L H, 9070L L, 9070L L T5, 9070L SH, 9070M, 9080L, 9080L GE, 9080L H, 9080L SH, 9080N H, 9080N L, 9090L, 9090L GE, 9090L H, 9090L H T4, 9090L H T5, 9090L SH T4, 9090L SH T5, 9090L T3, 9090X, 9090X GE T3, 9090X GE T4, 9090X GE T5, 9090X H, 9090X H H, 9090X H T4, 9090X T3, 9090X T4, 9090X T5, SB36, SB56, SB58, SB60, SB62, SB64, SB65, VL600, VL6040, VL6050, VL6060, VL6070, VL6080, VL6090, VL610, VL620, VL630, VL640, VL660, VM4090, VM460, VX680, VX7090

REF.213D

DEDO DESPALILLADORA CORTO

Comp. 87681134

7030L, 7030M, 7030M H, 8030L, 9030L, 9040L, 9040M, 9050L H, 9050L L, 9050L SH, 9060L, 9060L GE, 9060L H, 9060L SH, 9070L H, 9070L L, 9070L L T5, 9070L SH, 9070M, 9080L, 9080L GE, 9080L H, 9080L SH, 9080N H, 9080N L, 9090L, 9090L GE, 9090L H, 9090L H T4, 9090L H T5, 9090L SH T4, 9090L SH T5, 9090L T3, 9090X, 9090X GE T3, 9090X GE T4, 9090X GE T5, 9090X H, 9090X H H, 9090X H T4, 9090X T3, 9090X T4, 9090X T5, SB33, SB35, SB53, SB55, VL5060, VL5080, VL5090, VL530, VL540, VL550, VL570, VM3080, VM3080 AL, VM3090, VM340, VM370, VN2080, VN2090, VN300

REF.214B

VARILLA DESPALILLADORA NORMAL

Comp. -

9030L, 9040L, 9040M, 9050L H, 9050L L, 9060L, 9060L GE, 9060L H, 9070L H, 9070L L, 9070L L T5, 9070M, 9080L, 9080L GE, 9080L H, 9090L, 9090L GE, 9090L H, 9090L H T4, 9090L H T5, 9090L T3, 9090X, 9090X GE T3, 9090X GE T4, 9090X GE T5, 9090X H, 9090X H H, 9090X H T4, 9090X T3, 9090X T4, 9090X T5, VL5060, VL5080, VL5090, VM3080, VM3090, VX7090

REF.214C

VARILLA DESPALILLADORA 0,2mm MAS GRUESA

Comp. 944027440

9030L, 9040L, 9040M, 9050L H, 9050L L, 9060L, 9060L GE, 9060L H, 9070L H, 9070L L, 9070L L T5, 9070M, 9080L, 9080L GE, 9080L H, 9090L, 9090L GE, 9090L H, 9090L H T4, 9090L H T5, 9090L T3, 9090X, 9090X GE T3, 9090X GE T4, 9090X GE T5, 9090X H, 9090X H H, 9090X H T4, 9090X T3, 9090X T4, 9090X T5, VL5060, VL5080, VL5090, VM3080, VM3090, VX7090

REF.295Z

RUEDA DESPALILLADORA

Comp. 944027439

7030L, 7030M, 7030M H, 8030L, 9030L, 9040L, 9040M, 9050L H, 9050L L, 9050L SH, 9060L, 9060L GE, 9060L H, 9060L SH, 9070L H, 9070L L, 9070L L T5, 9070L SH, 9070M, 9080L, 9080L GE, 9080L H, 9080L SH, 9080N H, 9080N L, 9090L, 9090L GE, 9090L H, 9090L H T4, 9090L H T5, 9090L SH T4, 9090L SH T5, 9090L T3, 9090X, 9090X GE T3, 9090X GE T4, 9090X GE T5, 9090X H, 9090X H H, 9090X H T4, 9090X T3, 9090X T4, 9090X T5, SB33, SB35, SB36, SB53, SB55, SB56, SB58, SB60, SB62, SB64, VL5060, VL5080, VL5090, VL530, VL540, VL550, VL570, VL600, VL6040, VL6050, VL6060, VL6070, VL6080, VL6090, VL610, VL620, VL630, VL640, VL660, VM3080, VM3080 AL, VM3090, VM340, VM370, VM4090, VM460, VN2080, VN2090, VN300, VX680, VX7090

REF.296A

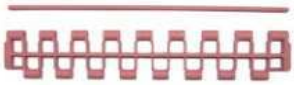

MALLA CINTA Y VARILLA DESPALILLADORA

Comp. 944027670, 944027440

9030L, 9040L, 9040M, 9050L H, 9050L L, 9060L, 9060L GE, 9060L H, 9060L SH, 9070L H, 9070L L, 9070L L T5, 9070M, 9080L, 9080L GE, 9080L H, 9080L SH, 9090L, 9090L GE, 9090L H, 9090L H T4, 9090L H T5, 9090L T3, 9090X, 9090X GE T3, 9090X GE T4, 9090X GE T5, 9090X H, 9090X H H, 9090X H T4, 9090X O GE, 9090X O GE T4, 9090X O H T4, 9090X O T4, 9090X OP, 9090X OP GE, 9090X T3, 9090X T4, 9090X T5, SB33, SB35, SB36, SB53, SB55, SB56, SB58, SB60, SB62, SB64, VL5060, VL5080, VL5090, VL530, VL540, VL550, VL570, VL600, VL6040, VL6050, VL6060, VL6070, VL6080, VL6090, VL610, VL620, VL630, VL640, VL660, VM3080, VM3080 AL, VM3090, VM340, VM370, VM4090, VM460, VN2080, VN2090, VX680, VX7090

REF.296C

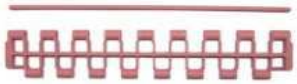

KIT MALLA COMPLETA DESPALILLADORA VL/VX 92 conjuntos

Comp. 944031438

9030L, 9040L, 9040M, 9050L H, 9050L L, 9060L, 9060L GE, 9060L H, 9060L SH, 9070L H, 9070L L, 9070L L T5, 9070M, 9080L, 9080L GE, 9080L H, 9080L SH, 9090L, 9090L GE, 9090L H, 9090L H T4, 9090L H T5, 9090L T3, 9090X, 9090X GE T3, 9090X GE T4, 9090X GE T5, 9090X H, 9090X H H, 9090X H T4, 9090X O GE, 9090X O GE T4, 9090X O H T4, 9090X O T4, 9090X OP, 9090X OP GE, 9090X T3, 9090X T4, 9090X T5, SB33, SB35, SB36, SB53, SB55, SB56, SB58, SB60, SB62, SB64, VL5060, VL5080, VL5090, VL530, VL540, VL550, VL570, VL600, VL6040, VL6050, VL6060, VL6070, VL6080, VL6090, VL610, VL620, VL630, VL640, VL660, VM3080, VM3080 AL, VM3090, VM340, VM370, VM4090, VM460, VN2080, VN2090, VX680, VX7090

REF.296D

MALLA CINTA MÁS ABIERTA BLANCA Y VARILLA DESPALILLADORA

Comp. 47859604

9050L H, 9090L H T4, 9070L H, 9070L L, 9050L L, 9070M, 9090X GE T4, 9090X T4, 9090X HEAD T4, 9090X GE T5, 9090X T5, 9030L, 9090L H T5, 9090X GE T3, 9090X T3, 9090L T3, 9070L L T5, 9070M T5, 9030L T5, 9070L H T5, 9050L H T5, 9050L L T5

REF.296E

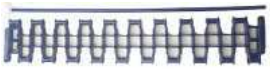

MALLA CINTA MÁS CERRADA AZUL Y VARILLA DESPALILLADORA

Comp. 51613223

9050L H, 9090L H T4, 9070L H, 9070L L, 9050L L, 9070M, 9090X GE T5, 9090X T5, 9030L, 9090L H T5, 9090X GE T3, 9090X T3, 9090L T3, 9070L L T5, 9070M T5, 9030L T5, 9070L H T5, 9050L H T5, 9050L L T5

REF.511A

CADENA TRANSMISIÓN 60H79 PASOS

Comp. 920019483, 920017691

9040L, 9060L, 9090L H, 9090X, 9090X GE, 9090X GE T3, 9090X GE T4, 9090X GE T5, 9090X H, 9090X H H, 9090X H T4, 9090X T3, 9090X T4, 9090X T5, SB65, VL5060, VL530, VL540, VL600, VL6040, VM3080, VM340, VX7090

REF.511B

UNIÓN CADENA TRANSMISIÓN 60H

Comp. -

9040L, 9060L, 9090L H, 9090X, 9090X GE, 9090X GE T3, 9090X GE T4, 9090X GE T5, 9090X H, 9090X H H, 9090X H T4, 9090X T3, 9090X T4, 9090X T5, SB65, VL5060, VL530, VL540, VL600, VL6040, VM3080, VM340, VX7090

REF.511C

MEDIO ESLABON TRANSM. 60H MEDIO PASO

Comp. -

9040L, 9060L, 9090L H, 9090X, 9090X GE, 9090X GE T3, 9090X GE T4, 9090X GE T5, 9090X H, 9090X H H, 9090X H T4, 9090X T3, 9090X T4, 9090X T5, SB65, VL5060, VL530, VL540, VL600, VL6040, VM3080, VM340, VX7090,7,94

REF.549A

TOPE GOMA(700gr)DETRÁS

Comp. 920017480

1620, 1620S, 2420, 2520, 2620, 2720, SB36, SB52, SB54, SB56, SB58, SB60, SB62, SB64, SB65, VL5080, VL5090, VL550, VL570, VL600, VL6040, VL6050, VL6060, VL6070, VL6080, VL6090, VL610, VL620, VL630, VL640, VL660, VM3080 AL, VM3090, VM370, VM4090, VM460, VX680, VX7090

REF.549B

AISLANTE GUÍAS SACUDIDOR (85X70)

Comp. 920019360

7030L, 8030L, 9030L, 9040L, 9040M, 9050L H, 9050L L, 9050L SH, 9060L, 9060L GE, 9060L H, 9060L SH, 9070L H, 9070L L, 9070L L T5, 9070L SH, 9070M, 9080L, 9080L GE, 9080L H, 9080L SH, 9090L, 9090L GE, 9090L H, 9090L H T4, 9090L H T5, 9090L SH, 9090L SH T4, 9090L SH T5, 9090L T3, 9090X, 9090X GE, 9090X GE T3, 9090X GE T4, 9090X GE T5, 9090X H, 9090X H H, 9090X H T4, 9090X T3, 9090X T4, 9090X T5, SB33, SB35, SB36, SB53, SB55

REF.549C

TOPE GOMA (700gr) delante

Comp. 920019016

SB33, SB35, SB36, SB53, SB55, SB56, SB58, SB60, SB62, SB64, VL5060, VL530, VL540, VL600, VL6040, VM3080, VM340, VN2090, VN300

REF.549D

TOPE GOMA(700gr) detrás

Comp. 920094157

1214, 1620, 1620S, SB33, SB35, SB53, SB55, VL5060, VL530, VL540, VM3080, VM340, VN2090, VN300

REF.549E

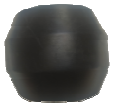

AMORTIGUADOR (12x14 cm)

Comp. 84348978 / 84126153

9030L, 9040L,9040M,9060L,9080L,9090L,9090X

REF.549F

APOYO ELÁSTICO

Comp. 87742806

10.90X, 11.90X, 9090X OLIVE, VX7090 OLIVE

REF.293R

CINTA OLIVE LARGA SALIDA LATERAL 225X3362MM

Comp. 84424258

10.90X,9090 OLIVE, VX7090 OLIVE

REF.293S

CINTA LATERAL 500X1327MM (12)

Comp. 51452323

VL7030

NEW HOLLAND-BRAUD COMPATIBLE

EDUARDO

REF.555A

PIÑÓN DESPALILLADOR

Comp. 87610362, 84484443

9040L, 9040M, 9060L, 9060L GE, 9060L H, 9080L, 9080L GE, 9080L H, 9090L, 9090L GE, 9090L H, 9090X, 9090X H, 9090X H H, SB33, SB35, SB36, SB53, SB55, SB56, SB58, SB60, SB62, SB64, VL5060, VL5080, VL5090, VL530, VL540, VL550, VL570, VL600, VL6040, VL6050, VL6060, VL6070, VL6080, VL6090, VL610, VL620, VL630, VL640, VL660, VM3080, VM3080 AL, VM3090, VM340, VM370, VM4090, VM460, VN2080, VN2090, VN300, VX680, VX7090

REF.555C

PIÑÓN DESPALILLADOR MALLA CINTA MÁS CERRADA AZUL

Comp. 51613526

7030L ,7030M ,8030L ,9050L H ,9090L H T4 ,9070L H ,9070L L ,9050L L ,9070M ,9080N HEAD ,9080N H ,9080N L ,9030L ,9090L H T5 ,9090L SH T4 ,9090L T3 ,9090L SH T5 ,7030M HEAD ,9050L SH ,9070L SH ,9070L L T5 ,9050L SH T5 ,9080N L T5 ,9070M T5 ,9030L T5 ,9070L H T5 ,9070L SH T5 ,9050L H T5 ,9050L L T5 ,8030L T5 ,9080N H T5

REF.580A

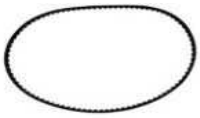

CORREA DESPALILLADOR

Comp. 920019616

9030L, 9040L, 9040M, 9050L H, 9050L L, 9050L SH, 9060L, 9060L GE, 9060L H, 9060L SH, 9070L H, 9070L L, 9070L L T5, 9070L SH, 9070M, 9080L, 9080L GE, 9080L H, 9080L SH, 9080N H, 9080N L, 9090L, 9090L GE, 9090L H, 9090L H T4, 9090L H T5, 9090L SH, 9090L SH T4, 9090L SH T5, 9090L T3, 9090X, 9090X GE, 9090X H, 9090X H H, 9090X H T4, 9090X O, 9090X O GE, 9090X T3, 9090X T4, 9090X T5, SB33, SB35, SB36, SB53, SB55, SB56, SB58, SB60, SB62, SB64, SB65, VL600, VL6040, VL6050, VL6060, VL6070, VL6080, VL6090, VL610, VL620, VL630, VL640, VL660, VM4090, VM460, VX680, VX7090

REF.570B

COJINETE COLUMNAS DELANTERAS n°11

Comp. 920092458

1214, 1620, 1620S, 2420, 2520, 2620, 2720, 7030M, 7030M H, 8030L, 9040L, 9040M, 9060L, 9060L GE, 9060L H, 9060L SH, 9080L, 9080L GE, 9080L H, 9080L SH, 9090L, 9090L GE, 9090L H, 9090L SH, 9090X, 9090X GE, 9090X H, 9090X H H, SB33, SB35, SB36, SB52, SB53, SB54, SB55, SB56, SB58, SB60, SB62, SB64, SB65, VL5060, VL5080, VL5090, VL530, VL540, VL550, VL570, VL600, VL6040, VL6050, VL6060, VL6070, VL6080, VL6090, VL610, VL620, VL630, VL640, VL660, VM3080, VM3080 AL, VM3090, VM340, VM370, VM4090, VM460, VN2090, VN300, VX680, VX7090

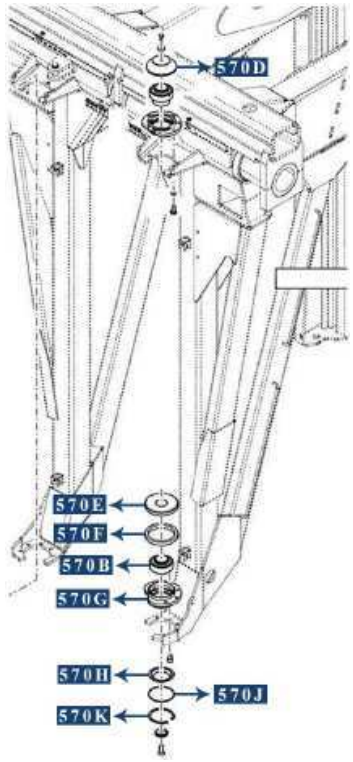

REF.570D*

ARANDELA DE TAPÓN n°6

Comp. 913355562

1214, 1620, 1620S, 2420, 2520, 2620, 2720, 9040L, 9040M, 9060L, 9060L GE, 9060L H, 9060L SH, 9080L, 9080L GE, 9080L H, 9080L SH, 9090L, 9090L GE, 9090L H, 9090L SH, 9090X, 9090X GE, 9090X H, 9090X H H, SB33, SB35, SB36, SB52, SB53, SB54, SB55, SB56, SB58, SB60, SB62, SB64, SB65, VL5060, VL5080, VL5090, VL530, VL540, VL550, VL570, VL600, VL6040, VL6050, VL6060, VL6070, VL6080, VL6090, VL610, VL620, VL630, VL640, VL660, VM3080, VM3080 AL, VM3090, VM340, VM370, VM4090, VM460, VN2090, VN300, VX680, VX7090

REF.570E*

ARANDELA HERMÉTICA n°13

Comp. 944007707

9040L, 9040M, 9060L, 9060L GE, 9060L H, 9060L SH, 9080L, 9080L GE, 9080L H, 9080L SH, 9090L, 9090L GE, 9090L H, 9090L SH, 9090X, 9090X GE, 9090X H, 9090X H H, SB33, SB35, SB36, SB52, SB53, SB54, SB55, SB56, SB58, SB60, SB62, SB64, SB65, VL5060, VL5080, VL5090, VL530, VL540, VL550, VL570, VL600, VL6040, VL6050, VL6060, VL6070, VL6080, VL6090, VL610, VL620, VL630, VL640, VL660, VM3080, VM3080 AL, VM3090, VM340, VM370, VM4090, VM460, VN2090, VN300, VX680, VX7090

REF.570F*

ARANDELA DE CIERRE n°8

Comp. 920018497

7030M, 7030M H, 8030L, 9040L, 9040M, 9060L, 9060L GE, 9060L H, 9060L SH, 9080L, 9080L GE, 9080L H, 9080L SH, 9090L, 9090L GE, 9090L H, 9090L SH, 9090X, 9090X GE, 9090X H, 9090X H H, SB33, SB35, SB36, SB52, SB53, SB54, SB55, SB56, SB58, SB60, SB62, SB64, SB65, VL5060, VL5080, VL5090, VL530, VL540, VL550, VL570, VL600, VL6040, VL6050, VL6060, VL6070, VL6080, VL6090, VL610, VL620, VL630, VL640, VL660, VM3080, VM3080 AL, VM3090, VM340, VM370, VM4090, VM460, VN2090, VN300, VX680, VX7090

REF.570G*

SOPORTE DE COJINETE n°16

Comp. 944028987

7030M, 7030M H, 8030L, 9040L, 9040M, 9060L, 9060L GE, 9060L H, 9060L SH, 9080L, 9080L GE, 9080L H, 9080L SH, 9090L, 9090L GE, 9090L H, 9090L SH, 9090X, 9090X GE, 9090X H, 9090X H H, VL5060, VL5080, VL5090, VL530, VL540, VL550, VL570, VL600, VL6040, VL6050, VL6060, VL6070, VL6080, VL6090, VL610, VL620, VL630, VL640, VL660, VM3080, VM3080 AL, VM3090, VM340, VM370, VM4090, VM460, VN2090, VN300, VX680, VX7090

REF.570H*

ARANDELA DE TAPÓN n°14

Comp. 944007708

9040L, 9040M, 9060L, 9060L GE, 9060L H, 9060L SH, 9080L, 9080L GE, 9080L H, 9080L SH, 9090L, 9090L GE, 9090L H, 9090L SH, 9090X, 9090X GE, 9090X H, 9090X H H, SB33, SB35, SB36, SB52, SB53, SB54, SB55, SB56, SB58, SB60, SB62, SB64, SB65, VL5060, VL5080, VL5090, VL530, VL540, VL550, VL570, VL600, VL6040, VL6050, VL6060, VL6070, VL6080, VL6090, VL610, VL620, VL630, VL640, VL660, VM3080, VM3080 AL, VM3090, VM340, VM370, VM4090, VM460, VN2090, VN300, VX680, VX7090

REF.570J*

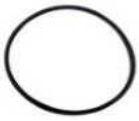

JUNTA TÓRICA n°9

Comp. 920018498

7030M, 7030M H, 8030L, 9040L, 9040M, 9060L, 9060L GE, 9060L H, 9060L SH, 9080L, 9080L GE, 9080L H, 9080L SH, 9090L, 9090L GE, 9090L H, 9090L SH, 9090X, 9090X GE, 9090X H, 9090X H H, SB33, SB35, SB36, SB52, SB53, SB54, SB55, SB56, SB58, SB60, SB62, SB64, SB65, VL5060, VL5080, VL5090, VL530, VL540, VL550, VL570, VL600, VL6040, VL6050, VL6060, VL6070, VL6080, VL6090, VL610, VL620, VL630, VL640, VL660, VM3080, VM3080 AL, VM3090, VM340, VM370, VM4090, VM460, VN2090, VN300, VX680, VX7090

REF.570K*

ARANDELA DE RETENCIÓN n°10

Comp. 920018499

7030M, 7030M H, 8030L, 9040L, 9040M, 9060L, 9060L GE, 9060L H, 9060L SH, 9080L, 9080L GE, 9080L H, 9080L SH, 9090L, 9090L GE, 9090L H, 9090L SH, 9090X, 9090X GE, 9090X H, 9090X H H, SB33, SB35, SB36, SB52, SB53, SB54, SB55, SB56, SB58, SB60, SB62, SB64, SB65, VL5060, VL5080, VL5090, VL530, VL540, VL550, VL570, VL600, VL6040, VL6050, VL6060, VL6070, VL6080, VL6090, VL610, VL620, VL630, VL640, VL660, VM3080, VM3080 AL, VM3090, VM340, VM370, VM4090, VM460, VN2090, VN300, VX680, VX7090

REF.570N

COJINETE COLUMNAS Ø60x110x28 OSCILANTE 2 HILERAS ESFERICAS

Comp. 47499485 (428162)

7030M, 7030M H, 8030L, 9040L, 9040M, 9060L, 9060L GE, 9060L H, 9060L SH, 9080L, 9080L GE, 9080L H, 9080L SH, 9090L, 9090L GE, 9090L H, 9090L SH, 9090X, 9090X GE, 9090X H, 9090X H H,

REF.570P

COJINETE COLUMNAS Ø40x80x23 OSCILANTE 2 HILERAS ESFERICAS

Comp. 87516228

7030M, 7030M H, 8030L, 9040L, 9040M, 9060L, 9060L GE, 9060L H, 9060L SH, 9080L, 9080L GE, 9080L H, 9080L SH, 9090L, 9090L GE, 9090L H, 9090L SH, 9090X, 9090X GE, 9090X H, 9090X H H,

REF.730A

PINTURA AZUL (0,4L AEROSOL

Comp. 9973524/73332825

7030L, 7030M, 8030L, 9040L, 9040M, 9050L H, 9050L L, 9050L SH, 9060L, 9060L GE, 9060L H, 9060L SH, 9070L H, 9070L L, 9070L SH, 9080L, 9080L GE, 9080L H, 9080L SH, 9080N H, 9080N L, 9090L, 9090L GE, 9090L H, 9090L H T4, 9090L SH, 9090L SH T4, 9090X, 9090X GE, 9090X GE T4, 9090X H, 9090X H T4, 9090X O, 9090X O GE, 9090X O GE T4, 9090X O T4, 9090X T4, VX7090

REF.730B

PINTURA GRIS OSCUARA (0,4L AEROSOL

Comp. 9973528

7030L, 7030M, 9050L SH, 9060L, 9060L GE, 9060L H, 9060L SH, 9070L H, 9070L L, 9070L SH, 9080L, 9080L GE, 9080L H, 9080L SH, 9080N H, 9080N L, 9090L, 9090L GE, 9090L H, 9090L H T4, 9090L SH, 9090L SH T4, 9090X, 9090X GE, 9090X GE T4, 9090X H, 9090X H T4, 9090X O, 9090X O GE, 9090X O GE T4, 9090X O T4, 9090X T4, VX7090

REF.731A

SILENT BLOCK 2 PERNOS

Comp. 920094153

1214, 1620, 1620S, 2414, 2420, 2514, 2520, 2614, 2620, 2714, 2720, 9090X O, 9090X O GE, 9090X O GE T3, 9090X O GE T4, 9090X O GE T5, 9090X O H T4, 9090X O T3, 9090X O T4, 9090X O T5, 9090X OP, 9090X OP GE, SB33, SB35, SB52, SB53, SB54, SB55, T140, T240, VL5060, VL5080, VL5090, VL530, VL540, VL550, VL570, VM3080, VM3080 AL, VM3090, VM340, VM370, VN2090, VN300, VX7090

REF.731B

SILENT BLOCK 1 PERNO

Comp. 920018565

9040L, 9040M, 9050L H, 9050L L, 9060L, 9060L GE, 9060L H, 9060L SH, 9070L H, 9070L L, 9070L L T5, 9070M, 9070N H T5, 9070N L, 9070N L T5, 9070 , 9080L, 9080L GE, 9080L H, 9080L SH, 9080N H, 9080N L, 9090L, 9090L GE, 9090L H, 9090L H T4, 9090L H T5, 9090L SH, 9090L T3, 9090X, 9090X GE, 9090X H, 9090X H H, 9090X H T4, 9090X O, 9090X O GE, 9090X O GE T3, 9090X O GE T4, 9090X O GE T5, 9090X O H T4, 9090X O T3, 9090X O T4, 9090X O T5, 9090X OP, 9090X OP GE, 9090X T3, 9090X T4, 9090X T5, SB36, SB56, SB58, SB60, SB62, SB64, SB65, VL5060, VL5080, VL5090, VL530, VL540, VL550, VL570, VL600, VL6040, VL6050, VL6060, VL6070, VL6080, VL6090, VL610, VL620, VL630, VL640, VL660, VM3080, VM3080 AL, VM3090, VM340, VM370, VM4090, VM460, VN2080, VN2090, VN260, VN300, VX680, VX7090

REF.557A

REDUCTOR DEL SINFIN

Comp. 84248099

SB,VL,9000

Todas las marcas comerciales pertenecen a sus respectivos propietarios y su uso es solo informativo.

Compruebe las Ref. antes.

WWW.EDUARDOREPUESTOSAGRICOLAS.COM

IVA no incluido

Transporte EU gratuito en pedidos 600€

NEW HOLLAND-BRAUD
COMPATIBLE

EDUARDO

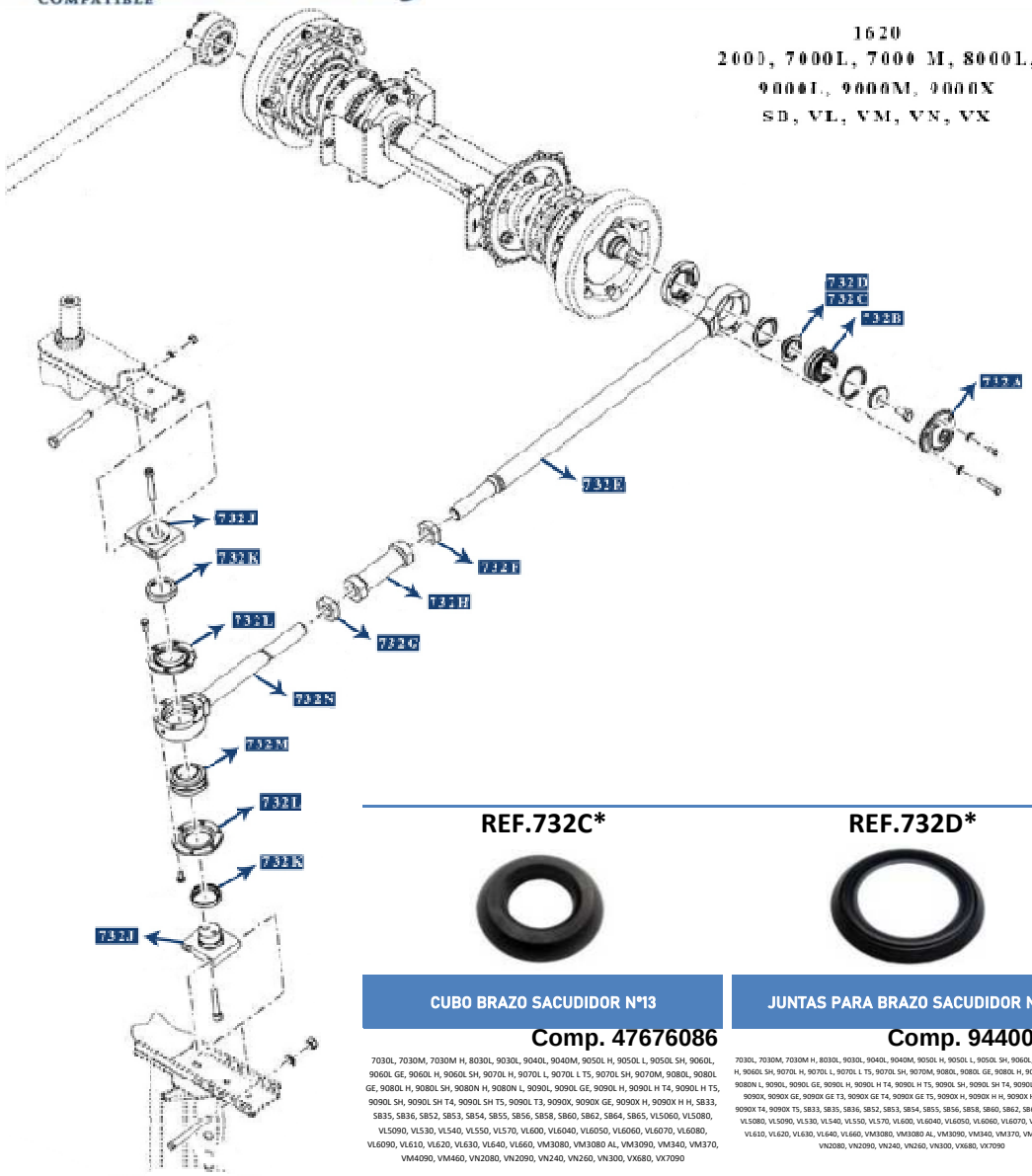

REF.732A*

TAPÓN BRIDA N°20

Comp. 944000002

1620, 1620S, 2420, 2520, 2620, 2720, 7030L, 7030M, 7030M H, 8030L, 9030L, 9040L, 9040M, 9050L H, 9050L L, 9050L SH, 9060L, 9060L GE, 9060L H, 9060L SH, 9070L H, 9070L L, 9070L L T5, 9070L SH, 9070M, 9080L, 9080L GE, 9080L H, 9080L SH, 9090L, 9090L GE, 9090L H, 9090L H T4, 9090L H T5, 9090L SH, 9090L SH T4, 9090L SH T5, 9090L T3, 9090X, 9090X GE, 9090X GE T3, 9090X GE T4, 9090X GE T5, 9090X H, 9090X H H, 9090X H T4, 9090X T3, 9090X T4, 9090X T5, SB33, SB35, SB36, SB52, SB53, SB54, SB55, SB56, SB58, SB60, SB62, SB64, SB65, VL5060, VL5080, VL5090, VL530, VL540, VL550, VL570, VL600, VL6040, VL6050, VL6060, VL6070, VL6080, VL6090, VL610, VL620, VL630, VL640, VL660, VM3080, VM3080 AL, VM3090, VM340, VM370, VM4090, VM460, VN2090, VN240, VN260, VN300, VX680, VX7090

REF.732B

COJINETE BRAZO SACUDIDOR N°6

Comp. 26796210

1620, 1620S, 2420, 2520, 2620, 2720, 7030L, 7030M, 7030M H, 8030L, 9030L, 9040L, 9040M, 9050L H, 9050L L, 9050L SH, 9060L, 9060L GE, 9060L H, 9060L SH, 9070L H, 9070L L, 9070L L T5, 9070L SH, 9070M, 9080L, 9080L GE, 9080L H, 9080L SH, 9080N H, 9080N L, 9090L, 9090L GE, 9090L H, 9090L H T4, 9090L H T5, 9090L SH, 9090L SH T4, 9090L SH T5, 9090L T3, 9090X, 9090X GE, 9090X H, 9090X H H, SB33, SB35, SB36, SB52, SB53, SB54, SB55, SB56, SB58, SB60, SB62, SB64, SB65, VL5060, VL5080, VL5090, VL530, VL540, VL550, VL570, VL600, VL6040, VL6050, VL6060, VL6070, VL6080, VL6090, VL610, VL620, VL630, VL640, VL660, VM3080, VM3080 AL, VM3090, VM340, VM370, VM4090, VM460, VN2080, VN2090, VN240, VN260, VN300, VX680, VX7090

REF.732C*

CUBO BRAZO SACUDIDOR N°13

Comp. 47676086

7030L, 7030M, 7030M H, 8030L, 9030L, 9040L, 9040M, 9050L H, 9050L L, 9050L SH, 9060L, 9060L GE, 9060L H, 9060L SH, 9070L H, 9070L L, 9070L L T5, 9070L SH, 9070M, 9080L, 9080L GE, 9080L H, 9080L SH, 9080N H, 9080N L, 9090L, 9090L GE, 9090L H, 9090L H T4, 9090L H T5, 9090L SH, 9090L SH T4, 9090L SH T5, 9090L T3, 9090X, 9090X GE, 9090X GE T3, 9090X GE T4, 9090X GE T5, 9090X H, 9090X H H, SB33, SB35, SB36, SB52, SB53, SB54, SB55, SB56, SB58, SB60, SB62, SB64, SB65, VL5060, VL5080, VL5090, VL530, VL540, VL550, VL570, VL600, VL6040, VL6050, VL6060, VL6070, VL6080, VL6090, VL610, VL620, VL630, VL640, VL660, VM3080, VM3080 AL, VM3090, VM340, VM370, VM4090, VM460, VN2080, VN2090, VN240, VN260, VN300, VX680, VX7090

REF.732D*

JUNTAS PARA BRAZO SACUDIDOR N°13

Comp. 944007716

7030L, 7030M, 7030M H, 8030L, 9030L, 9040L, 9040M, 9050L H, 9050L L, 9050L SH, 9060L, 9060L GE, 9060L H, 9060L SH, 9070L H, 9070L L, 9070L L T5, 9070L SH, 9070M, 9080L, 9080L GE, 9080L H, 9080L SH, 9080N H, 9080N L, 9090L, 9090L GE, 9090L H, 9090L H T4, 9090L H T5, 9090L SH, 9090L SH T4, 9090L SH T5, 9090L T3, 9090X, 9090X GE, 9090X GE T3, 9090X GE T4, 9090X GE T5, 9090X H, 9090X H H, 9090X H T4, 9090X T3, 9090X T4, 9090X T5, SB33, SB35, SB36, SB52, SB53, SB54, SB55, SB56, SB58, SB60, SB62, SB64, SB65, VL5060, VL5080, VL5090, VL530, VL540, VL550, VL570, VL600, VL6040, VL6050, VL6060, VL6070, VL6080, VL6090, VL610, VL620, VL630, VL640, VL660, VM3080, VM3080 AL, VM3090, VM340, VM370, VM4090, VM460, VN2080, VN2090, VN240, VN260, VN300, VX680, VX7090

REF.732E*

BIELA ESLABÓN N°12

Comp. 944000056

1620, 1620S, 2420, 2520, 2620, 2720, 7030L, 7030M, 7030M H, 8030L, 9030L, 9040L, 9040M, 9050L L, 9050L SH, 9060L, 9060L GE, 9060L H, 9060L SH, 9070L L, 9070L L T5, 9070L SH, 9070M, 9080L, 9080L GE, 9080L H, 9080L SH, 9090L, 9090L GE, 9090L H, 9090L SH, 9090L SH T4, 9090L SH T5, 9090L T3, SB33, SB35, SB36, SB52, SB53, SB54, SB55, SB56, SB58, SB60, SB62, SB64, VL5060, VL5080, VL5090, VL530, VL540, VL550, VL570, VL600, VL6040, VL6050, VL6060, VL6070, VL6080, VL6090, VL610, VL620, VL630, VL640, VL660, VM3080, VM3080 AL, VM3090, VM340, VM370, VM4090, VM460, VN2090, VN300

REF.732F*

TUERCA DELGADA N°19

Comp. 920008858

1214, 1620, 1620S, 2420, 2520, 2620, 2720, 7030L, 7030M, 7030M H, 8030L, 9030L, 9040L, 9040M, 9050L H, 9050L L, 9050L SH, 9060L, 9060L GE, 9060L H, 9060L SH, 9070L H, 9070L L, 9070L L T5, 9070L SH, 9070M, 9070N L, 9080L, 9080L GE, 9080L H, 9080L SH, 9080N H, 9080N L, 9090L, 9090L GE, 9090L H, 9090L H T4, 9090L H T5, 9090L SH, 9090L SH T4, 9090L SH T5, 9090L T3, SB33, SB35, SB36, SB52, SB53, SB54, SB55, SB56, SB58, SB60, SB62, SB64, VL5060, VL5080, VL5090, VL530, VL540, VL550, VL570, VL600, VL6040, VL6050, VL6060, VL6070, VL6080, VL6090, VL610, VL620, VL630, VL640, VL660, VM3080, VM3080 AL, VM3090, VM340, VM370, VM4090, VM460, VN2080, VN2090, VN240, VN260, VN300

REF.732G*

TUERCA DELGADA N°18

Comp. 707704968

1620, 1620S, 2420, 2520, 2620, 2720, 7030L, 7030M, 7030M H, 8030L, 9030L, 9040L, 9040M, 9050L H, 9050L L, 9050L SH, 9060L, 9060L GE, 9060L H, 9060L SH, 9070L H, 9070L L, 9070L L T5, 9070L SH, 9070M, 9070N L, 9080L, 9080L GE, 9080L H, 9080L SH, 9080N H, 9080N L, 9090L, 9090L GE, 9090L H, 9090L H T4, 9090L H T5, 9090L SH, 9090L SH T4, 9090L SH T5, 9090L T3, SB33, SB35, SB36, SB52, SB53, SB54, SB55, SB56, SB58, SB60, SB62, SB64, VL5060, VL5080, VL5090, VL530, VL540, VL550, VL570, VL600, VL6040, VL6050, VL6060, VL6070, VL6080, VL6090, VL610, VL620, VL630, VL640, VL660, VM3080, VM3080 AL, VM3090, VM340, VM370, VM4090, VM460, VN2080, VN2090, VN240, VN260, VN300

REF.732H*

MANGUITO DE REGLAJE N°23

Comp. 944002335

1214, 1620, 1620S, 2420, 2520, 2620, 2720, 7030L, 7030M, 7030M H, 8030L, 9030L, 9040L, 9040M, 9050L H, 9050L L, 9050L SH, 9060L, 9060L GE, 9060L H, 9060L SH, 9070L H, 9070L L, 9070L L T5, 9070L SH, 9070M, 9070N L, 9080L, 9080L GE, 9080L H, 9080L SH, 9090L, 9090L GE, 9090L H, 9090L H T4, 9090L H T5, 9090L SH, 9090L SH T4, 9090L SH T5, 9090L T3, SB33, SB35, SB36, SB52, SB53, SB54, SB55, SB56, SB58, SB60, SB62, SB64, VL5060, VL5080, VL5090, VL530, VL540, VL550, VL570, VL600, VL6040, VL6050, VL6060, VL6070, VL6080, VL6090, VL610, VL620, VL630, VL640, VL660, VM3080, VM3080 AL, VM3090, VM340, VM370, VM4090, VM460, VN2080, VN2090, VN240, VN260, VN300

REF.732J*

SOPORTE BRAZO SACUDIDOR N°24

Comp. 944007020

7030L, 7030M, 7030M H, 8030L, 9030L, 9040L, 9040M, 9060L, 9060L GE, 9060L H, 9060L SH, 9080L, 9080L GE, 9080L H, 9080L SH, 9090L, 9090L GE, 9090L H, 9090L SH, SB33, SB35, SB36, SB52, SB53, SB54, SB55, SB56, SB58, SB60, SB62, SB64, SB65, VL5060, VL5080, VL5090, VL530, VL540, VL550, VL570, VL600, VL6040, VL6050, VL6060, VL6070, VL6080, VL6090, VL610, VL620, VL630, VL640, VL660, VM3080, VM3080 AL, VM3090, VM340, VM370, VM4090, VM460

REF.732K*

ANILLO DE CIERRE SACUDIDOR N°10

Comp. 944007018

7030L, 7030M, 7030M H, 8030L, 9030L, 9040L, 9040M, 9050L H, 9050L L, 9050L SH, 9060L, 9060L GE, 9060L H, 9060L SH, 9070L H, 9070L L, 9070L L T5, 9070L SH, 9070M, 9080L, 9080L GE, 9080L H, 9080L SH, 9090L, 9090L GE, 9090L H, 9090L H T4, 9090L H T5, 9090L SH, 9090L SH T4, 9090L SH T5, 9090L T3, 9090X, 9090X GE, 9090X GE T3, 9090X GE T4, 9090X GE T5, 9090X H, 9090X H H, 9090X H T4, 9090X T3, 9090X T4, 9090X T5, SB33, SB35, SB36, SB52, SB53, SB54, SB55, SB56, SB58, SB60, SB62, SB64, SB65, VL5060, VL5080, VL5090, VL530, VL540, VL550, VL570, VL600, VL6040, VL6050, VL6060, VL6070, VL6080, VL6090, VL610, VL620, VL630, VL640, VL660, VM3080, VM3080 AL, VM3090, VM340, VM370, VM4090, VM460, VN2090, VN300, VX680, VX7090

REF.732L*

RETENEDOR BRAZO SACUDIDOR N°11

Comp. 944007019

7030L, 7030M, 7030M H, 8030L, 9030L, 9040L, 9040M, 9050L H, 9050L L, 9050L SH, 9060L, 9060L GE, 9060L H, 9060L SH, 9070L H, 9070L L, 9070L L T5, 9070L SH, 9070M, 9080L, 9080L GE, 9080L H, 9080L SH, 9090L, 9090L GE, 9090L H, 9090L H T4, 9090L H T5, 9090L SH, 9090L SH T4, 9090L SH T5, 9090L T3, 9090X, 9090X GE, 9090X GE T3, 9090X GE T4, 9090X GE T5, 9090X H, 9090X H H, 9090X H T4, 9090X T3, 9090X T4, 9090X T5, SB33, SB35, SB36, SB52, SB53, SB54, SB55, SB56, SB58, SB60, SB62, SB64, SB65, VL5060, VL5080, VL5090, VL530, VL540, VL550, VL570, VL600, VL6040, VL6050, VL6060, VL6070, VL6080, VL6090, VL610, VL620, VL630, VL640, VL660, VM3080, VM3080 AL, VM3090, VM340, VM370, VM4090, VM460, VN2090, VN300, VX680, VX7090

REF.732M

ARTICULACIÓN BRAZO SACUDIDOR N°8

Comp. 920002308

1620, 1620S, 2420, 2514, 2520, 2620, 2714, 2720, 7030L, 7030M, 7030M H, 8030L, 9030L, 9040L, 9040M, 9050L H, 9050L L, 9050L SH, 9060L, 9060L GE, 9060L H, 9060L SH, 9070L H, 9070L L, 9070L L T5, 9070L SH, 9070M, 9080L, 9080L GE, 9080L H, 9080L SH, 9080N H, 9080N L, 9090L, 9090L GE, 9090L H, 9090L H T4, 9090L H T5, 9090L SH, 9090L SH T4, 9090L SH T5, 9090L T3, 9090X, 9090X GE, 9090X GE T3, 9090X GE T4, 9090X GE T5, 9090X H, 9090X H H, 9090X H T4, 9090X T3, 9090X T4, 9090X T5, SB33, SB35, SB36, SB52, SB53, SB54, SB55, SB56, SB58, SB60, SB62, SB64, SB65, VL5060, VL5080, VL5090, VL530, VL540, VL550, VL570, VL600, VL6040, VL6050, VL6060, VL6070, VL6080, VL6090, VL610, VL620, VL630, VL640, VL660, VM3080, VM3080 AL, VM3090, VM340, VM370, VM4090, VM460, VN2080, VN2090, VN240, VN260, VN300, VX680, VX7090

REF.732N*

BIELA ESLABÓN N°21

Comp. 944000053

1620, 1620S, 2420, 2520, 2620, 2720, 7030L, 7030M, 7030M H, 8030L, 9030L, 9040L, 9040M, 9050L L, 9050L SH, 9060L, 9060L GE, 9060L H, 9060L SH, 9070L L, 9070L L T5, 9070L SH, 9070M, 9080L, 9080L GE, 9080L H, 9080L SH, 9090L, 9090L GE, 9090L H, 9090L SH, 9090L SH T4, 9090L SH T5, 9090L T3, SB33, SB35, SB36, SB52, SB53, SB54, SB55, SB56, SB58, SB60, SB62, SB64, VL5060, VL5080, VL5090, VL530, VL540, VL550, VL570, VL600, VL6040, VL6050, VL6060, VL6070, VL6080, VL6090, VL610, VL620, VL630, VL640, VL660, VM3080, VM3080 AL, VM3090, VM340, VM370, VM4090, VM460, VN2090, VN300

IVA no incluido

Transporte EU gratuito en pedidos 600€

Todas las marcas comerciales pertenecen a sus respectivos propietarios y su uso es solo informativo.

WWW.EDUARDOREPUESTOSAGRICOLAS.COM

Compruebe las Ref. antes.

NEW HOLLAND-BRAUD COMPATIBLE

EDUARDO

REF.501A

REMACES CESTAS CAJA 250 UDS

Comp. 920018082

1214, 1620, 1620S, 2720, 7030L, 7030M, 7030M H, 8030L, 9030L, 9040L, 9040M, 9050L H, 9050L L, 9050L SH, 9060L, 9060L GE, 9060L H, 9060L SH, 9070L H, 9070L L, 9070L L TS, 9070L SH, 9070M, 9080L, 9080L GE, 9080L H, 9080L SH, 9080N H, 9080N L, 9090L, 9090L GE, 9090L H, 9090L H T4, 9090L H TS, 9090L SH, 9090L SH T4, 9090L SH TS, 9090L T3, 9090X, 9090X GE, 9090X GE T3, 9090X GE T4, 9090X GE TS, 9090X H, 9090X H H, 9090X H T4, 9090X O, 9090X O GE, 9090X O GE T3, 9090X O GE T4, 9090X O GE TS, 9090X O H T4, 9090X O T3, 9090X O T4, 9090X O TS, 9090X OP, 9090X OP GE, 9090X T3, 9090X T4, 9090X TS, LM625, SB33, SB35, SB36, SB52, SB53, SB54, SB55, SB56, SB58, SB60, SB62, SB64, SB65, VL5060, VL5080, VL5090, VL530, VL540, VL550, VL570, VL600, VL6040, VL6050, VL6060, VL6070, VL6080, VL6090, VL610, VL620, VL630, VL640, VL660, VM3080, VM3080 AL, VM3090, VM340, VM370, VM4090, VM460, VN2080, VN2090, VN240, VN260, VN300, VX680, VX7090

REF.502A

TORNILLO-TUERCA autoblocante UNION CESTAS M5-15MM

Comp. -

1214, 1620, 1620S, 2414, 2420, 2514, 2520, 2614, 2620, 2714, 2720, 7030L, 7030M, 7030M H, 8030L, 9030L, 9040L, 9040M, 9050L H, 9050L L, 9050L SH, 9060L, 9060L GE, 9060L H, 9060L SH, 9070L H, 9070L L, 9070L L TS, 9070L SH, 9070M, 9080L, 9080L GE, 9080L H, 9080L SH, 9080N H, 9080N L, 9090L, 9090L GE, 9090L H, 9090L H T4, 9090L H TS, 9090L SH, 9090L SH T4, 9090L SH TS, 9090L T3, 9090X, 9090X GE, 9090X GE T3, 9090X GE T4, 9090X GE TS, 9090X H, 9090X H H, 9090X H T4, 9090X O, 9090X O GE, 9090X O GE T3, 9090X O GE T4, 9090X O GE TS, 9090X O H T4, 9090X O T3, 9090X O T4, 9090X O TS, 9090X OP, 9090X OP GE, 9090X T3, 9090X T4, 9090X TS, 9090L T3, 9090X, 9090X GE, 9090X GE T3, 9090X GE T4, 9090X GE TS, 9090X H, 9090X H H, 9090X H T4, 9090X O, 9090X O GE, 9090X O GE T3, 9090X O GE T4, 9090X O GE TS, 9090X O H T4, 9090X O T3, 9090X O T4, 9090X O TS, 9090X OP, 9090X OP GE, 9090X T3, 9090X T4, 9090X TS, 9090L SH, 9090L SH T4, 9090L SH TS, 9090L T3, 9090X, 9090X GE, 9090X GE T3, 9090X GE T4, 9090X GE TS, 9090X H, 9090X H H, 9090X H T4, 9090X O, 9090X O GE, 9090X O GE T3, 9090X O GE T4, 9090X O GE TS, 9090X O H T4, 9090X O T3, 9090X O T4, 9090X O TS, 9090X OP, 9090X OP GE, 9090X T3, 9090X T4, 9090X TS, 5833, SB35, SB36, SB52, SB53, SB54, SB55, SB56, SB58, SB60, SB62, SB64, SB65, VL5060, VL5080, VL5090, VL530, VL540, VL550, VL570, VL600, VL6040, VL6050, VL6060, VL6070, VL6080, VL6090, VL610, VL620, VL630, VL640, VL660, VM3080, VM3080 AL, VM3090, VM340, VM370, VM4090, VM460, VN2080, VN2090, VN240, VN260, VN300, VX680, VX7090

REF.503A

TORNILLO M8x50-TUERCA PARTIDA-ARANDELA

Comp. 700051333,920019493,11194079

1214, 1620, 1620S, 2414, 2420, 2514, 2520, 2614, 2620, 2714, 2720, 7030L, 7030M, 7030M H, 8030L, 9030L, 9040L, 9040M, 9050L H, 9050L L, 9050L SH, 9060L, 9060L GE, 9060L H, 9060L SH, 9070L H, 9070L L, 9070L L TS, 9070L SH, 9070M, 9080L, 9080L GE, 9080L H, 9080L SH, 9080N H, 9080N L, 9090L, 9090L GE, 9090L H, 9090L H T4, 9090L H TS, 9090L SH, 9090L SH T4, 9090L SH TS, 9090L T3, 9090X, 9090X GE, 9090X GE T3, 9090X GE T4, 9090X GE TS, 9090X H, 9090X H H, 9090X H T4, 9090X O, 9090X O GE, 9090X O GE T3, 9090X O GE T4, 9090X O GE TS, 9090X O H T4, 9090X O T3, 9090X O T4, 9090X O TS, 9090X OP, 9090X OP GE, 9090X T3, 9090X T4, 9090X TS, 5833, SB35, SB36, SB52, SB53, SB54, SB55, SB56, SB58, SB60, SB62, SB64, SB65, VL5060, VL5080, VL5090, VL530, VL540, VL550, VL570, VL600, VL6040, VL6050, VL6060, VL6070, VL6080, VL6090, VL610, VL620, VL630, VL640, VL660, VM3080, VM3080 AL, VM3090, VM340, VM370, VM4090, VM460, VN2080, VN2090, VN240, VN260, VN300, VX680, VX7090

REF.503B

TORNILLO M8x50

Comp. 700051333

1620, 1620S, 2720, 4880, 7030L, 7030M, 7030M H, 8030L, 9030L, 9040L, 9040M, 9050L H, 9050L L, 9050L SH, 9060L, 9060L GE, 9060L H, 9060L SH, 9070L H, 9070L L, 9070L L TS, 9070L SH, 9070M, 9080L, 9080L GE, 9080L H, 9080L SH, 9090L, 9090L GE, 9090L H, 9090L H T4, 9090L H TS, 9090L SH, 9090L SH T4, 9090L SH TS, 9090L T3, 9090X, 9090X GE, 9090X GE T3, 9090X GE T4, 9090X GE TS, 9090X H, 9090X H H, 9090X H T4, 9090X O, 9090X O GE, 9090X O GE T3, 9090X O GE T4, 9090X O GE TS, 9090X O H T4, 9090X O T3, 9090X O T4, 9090X O TS, 9090X OP, 9090X OP GE, 9090X T3, 9090X T4, 9090X TS, 5833, SB35, SB36, SB52, SB53, SB54, SB55, SB56, SB58, SB60, SB62, SB64, SB65, VL5060, VL5080, VL5090, VL530, VL540, VL550, VL570, VL600, VL6040, VL6050, VL6060, VL6070, VL6080, VL6090, VL610, VL620, VL630, VL640, VL660, VM3080, VM3080 AL, VM3090, VM340, VM370, VM4090, VM460, VN2080, VN2090, VN240, VN260, VN300, VX680, VX7090

REF.504B

TORNILLO-M10X70+TUERCA PARTIDA (12.9 cincado)

Comp. 1107674, 92001949

1620, 1620S, 2720, 4880, 7030L, 7030M, 7030M H, 8030L, 9030L, 9040L, 9040M, 9050L H, 9050L L, 9050L SH, 9060L, 9060L GE, 9060L H, 9060L SH, 9070L H, 9070L L, 9070L L TS, 9070L SH, 9070M, 9080L, 9080L GE, 9080L H, 9080L SH, 9090L, 9090L GE, 9090L H, 9090L H T4, 9090L H TS, 9090L SH, 9090L SH T4, 9090L SH TS, 9090L T3, 9090X, 9090X GE, 9090X GE T3, 9090X GE T4, 9090X GE TS, 9090X H, 9090X H H, 9090X H T4, 9090X O, 9090X O GE, 9090X O GE T3, 9090X O GE T4, 9090X O GE TS, 9090X O H T4, 9090X O T3, 9090X O T4, 9090X O TS, 9090X OP, 9090X OP GE, 9090X T3, 9090X T4, 9090X TS, 5833, SB35, SB36, SB52, SB53, SB54, SB55, SB56, SB58, SB60, SB62, SB64, SB65, VL5060, VL5080, VL5090, VL530, VL540, VL550, VL570, VL600, VL6040, VL6050, VL6060, VL6070, VL6080, VL6090, VL610, VL620, VL630, VL640, VL660, VM3080, VM3080 AL, VM3090, VM340, VM370, VM4090, VM460, VN2080, VN2090, VN240, VN260, VN300, VX680, VX7090 - VENDIMIADORA (01/07 - 12/12)

REF.504C

TORNILLO-M10X70 AMARRE DELANTERO SACUDIDORES 12.9 Zn

Comp. 1107674

1620, 1620S, 4600, 7030L, 7030M, 7030M H, 8030L, 9030L, 9040L, 9040M, 9050L H, 9050L L, 9050L SH, 9060L, 9060L GE, 9060L H, 9060L SH, 9070L H, 9070L L, 9070L L TS, 9070L SH, 9070M, 9080L, 9080L GE, 9080L H, 9080L SH, 9090L, 9090L GE, 9090L H, 9090L H T4, 9090L H TS, 9090L SH, 9090L SH T4, 9090L SH TS, 9090L T3, 9090X, 9090X GE, 9090X GE T3, 9090X GE T4, 9090X GE TS, 9090X H, 9090X H H, 9090X H T4, 9090X O, 9090X O GE, 9090X O GE T3, 9090X O GE T4, 9090X O GE TS, 9090X O H T4, 9090X O T3, 9090X O T4, 9090X O TS, 9090X OP, 9090X OP GE, 9090X T3, 9090X T4, 9090X TS, 5833, SB35, SB36, SB52, SB53, SB54, SB55, SB56, SB58, SB60, SB62, SB64, SB65, VL5060, VL5080, VL5090, VL530, VL540, VL550, VL570, VL600, VL6040, VL6050, VL6060, VL6070, VL6080, VL6090, VL610, VL620, VL630, VL640, VL660, VM3080, VM3080 AL, VM3090, VM340, VM370, VM4090, VM460, VN2080, VN2090, VN240, VN260, VN300, VX680, VX7090

REF.504D

TORNILLO-M10X75 AMARRE TRASERO BIELA 12.9 Zn

Comp. 11107774

7030L, 7030M, 7030M H, 8030L, 9030L, 9040L, 9040M, 9050L H, 9050L L, 9050L SH, 9060L, 9060L GE, 9060L H, 9060L SH, 9070L H, 9070L L, 9070L L TS, 9070L SH, 9070M, 9080L, 9080L GE, 9080L H, 9080L SH, 9090L, 9090L GE, 9090L H, 9090L H T4, 9090L H TS, 9090L SH, 9090L SH T4, 9090L SH TS, 9090L T3, 9090X, 9090X GE, 9090X GE T3, 9090X GE T4, 9090X GE TS, 9090X H, 9090X H H, 9090X H T4, 9090X O, 9090X O GE, 9090X O GE T3, 9090X O GE T4, 9090X O GE TS, 9090X O H T4, 9090X O T3, 9090X O T4, 9090X O TS, 9090X OP, 9090X OP GE, 9090X T3, 9090X T4, 9090X TS, 5833, SB35, SB36, SB53, SB55, SB56, SB58, SB60, SB62, SB64, SB65, VL5060, VL5080, VL5090, VL530, VL540, VL550, VL570, VL600, VL6040, VL6050, VL6060, VL6070, VL6080, VL6090, VL610, VL620, VL630, VL640, VL660, VM3080, VM3080 AL, VM3090, VM340, VM370, VM4090, VM460, VN2090, VN300, VX680, VX7090

REF.504F

TORNILLO-M10X80 AMARRE DELANTERO SACUDIDORES 12.9 Zn

Comp. 11107874

7030L, 7030M, 7030M H, 8030L, 9030L, 9040L, 9040M, 9050L H, 9050L L, 9050L SH, 9060L, 9060L GE, 9060L H, 9060L SH, 9070L H, 9070L L, 9070L L TS, 9070L SH, 9070M, 9080L, 9080L GE, 9080L H, 9080L SH, 9090L, 9090L GE, 9090L H, 9090L H T4, 9090L H TS, 9090L SH, 9090L SH T4, 9090L SH TS, 9090L T3, 9090X, 9090X GE, 9090X GE T3, 9090X GE T4, 9090X GE TS, 9090X H, 9090X H H, 9090X H T4, 9090X O, 9090X O GE, 9090X O GE T3, 9090X O GE T4, 9090X O GE TS, 9090X O H T4, 9090X O T3, 9090X O T4, 9090X O TS, 9090X OP, 9090X OP GE, 9090X T3, 9090X T4, 9090X TS, 5833, SB35, SB36, SB53, SB55, SB56, SB58, SB60, SB62, SB64, SB65, VL5060, VL5080, VL5090, VL530, VL540, VL550, VL570, VL600, VL6040, VL6050, VL6060, VL6070, VL6080, VL6090, VL610, VL620, VL630, VL640, VL660, VM3080, VM3080 AL, VM3090, VM340, VM370, VM4090, VM460, VN2090, VN300, VX680, VX7090,3,08,1,6

REF.504G

TORNILLO-M10X80+TUERCA PARTIDA (12.9 cincado)

Comp. 11107874, 92001949

7030L, 7030M, 7030M H, 8030L, 9030L, 9040L, 9040M, 9050L H, 9050L L, 9050L SH, 9060L, 9060L GE, 9060L H, 9060L SH, 9070L H, 9070L L, 9070L L TS, 9070L SH, 9070M, 9080L, 9080L GE, 9080L H, 9080L SH, 9090L, 9090L GE, 9090L H, 9090L H T4, 9090L H TS, 9090L SH, 9090L SH T4, 9090L SH TS, 9090L T3, 9090X, 9090X GE, 9090X GE T3, 9090X GE T4, 9090X GE TS, 9090X H, 9090X H H, 9090X H T4, 9090X O, 9090X O GE, 9090X O GE T3, 9090X O GE T4, 9090X O GE TS, 9090X O H T4, 9090X O T3, 9090X O T4, 9090X O TS, 9090X OP, 9090X OP GE, 9090X T3, 9090X T4, 9090X TS, 5833, SB35, SB36, SB53, SB55, SB56, SB58, SB60, SB62, SB64, SB65, VL5060, VL5080, VL5090, VL530, VL540, VL550, VL570, VL600, VL6040, VL6050, VL6060, VL6070, VL6080, VL6090, VL610, VL620, VL630, VL640, VL660, VM3080, VM3080 AL, VM3090, VM340, VM370, VM4090, VM460, VN2080, VN2090, VN240, VN260, VN300, VX680, VX7090,3,08,1,6,3,14

REF.504E

TORNILLO-M10X75 +TUERCA PARTIDA (12.9 cincado)

Comp. 11107774, 92001949

7030L, 7030M, 7030M H, 8030L, 9030L, 9040L, 9040M, 9050L H, 9050L L, 9050L SH, 9060L, 9060L GE, 9060L H, 9060L SH, 9070L H, 9070L L, 9070L L TS, 9070L SH, 9070M, 9080L, 9080L GE, 9080L H, 9080L SH, 9090L, 9090L GE, 9090L H, 9090L H T4, 9090L H TS, 9090L SH, 9090L SH T4, 9090L SH TS, 9090L T3, 9090X, 9090X GE, 9090X GE T3, 9090X GE T4, 9090X GE TS, 9090X H, 9090X H H, 9090X H T4, 9090X O, 9090X O GE, 9090X O GE T3, 9090X O GE T4, 9090X O GE TS, 9090X O H T4, 9090X O T3, 9090X O T4, 9090X O TS, 9090X OP, 9090X OP GE, 9090X T3, 9090X T4, 9090X TS, 5833, SB35, SB36, SB52, SB53, SB54, SB55, SB56, SB58, SB60, SB62, SB64, SB65, VL5060, VL5080, VL5090, VL530, VL540, VL550, VL570, VL600, VL6040, VL6050, VL6060, VL6070, VL6080, VL6090, VL610, VL620, VL630, VL640, VL660, VM3080, VM3080 AL, VM3090, VM340, VM370, VM4090, VM460, VN2090, VN240, VN260, VN300, VX680, VX7090,3,08

REF.505B

TORNILLO M10X70- TUERCA PARTIDA - ARANDELAS

Comp. 11107674,944008815,11198479,920019491

1620, 1620S, 4600, 7030L, 7030M, 7030M H, 8030L, 9030L, 9040L, 9040M, 9050L H, 9050L L, 9050L SH, 9060L, 9060L GE, 9060L H, 9060L SH, 9070L H, 9070L L, 9070L L TS, 9070L SH, 9070M, 9080L, 9080L GE, 9080L H, 9080L SH, 9090L, 9090L GE, 9090L H, 9090L H T4, 9090L H TS, 9090L SH, 9090L SH T4, 9090L SH TS, 9090L T3, 9090X, 9090X GE, 9090X GE T3, 9090X GE T4, 9090X GE TS, 9090X H, 9090X H H, 9090X H T4, 9090X O, 9090X O GE, 9090X O H T4, 9090X T3, 9090X T4, 9090X TS, 5833, SB35, SB36, SB52, SB53, SB54, SB55, SB56, SB58, SB60, SB62, SB64, SB65, VL5060, VL5080, VL5090, VL530, VL540, VL550, VL570, VL600, VL6040, VL6050, VL6060, VL6070, VL6080, VL6090, VL610, VL620, VL630, VL640, VL660, VM3080, VM3080 AL, VM3090, VM340, VM370, VM4090, VM460, VN2090, VN240, VN260, VN300, VX680, VX7090 - VENDIMIADORA (01/07 - 12/12)

REF.506A

ARANDELA CIERRE

Comp. 70770628,920009501

1620, 1620S, 7030L, 7030M, 7030M H, 8030L, 9030L, 9040L, 9040M, 9050L H, 9050L L, 9050L SH, 9060L, 9060L GE, 9060L H, 9060L SH, 9070L H, 9070L L, 9070L L TS, 9070L SH, 9070M, 9080L, 9080L GE, 9080L H, 9080L SH, 9090L, 9090L GE, 9090L H, 9090L H T4, 9090L H TS, 9090L SH, 9090L SH T4, 9090L SH TS, 9090L T3, 9090X, 9090X GE, 9090X GE T3, 9090X GE T4, 9090X GE TS, 9090X H, 9090X H H, 9090X H T4, 9090X O, 9090X O GE, 9090X O GE T3, 9090X O GE T4, 9090X O GE TS, 9090X O H T4, 9090X O T3, 9090X O T4, 9090X O TS, 9090X OP, 9090X OP GE, 9090X T3, 9090X T4, 9090X TS, 5833, SB35, SB36, SB53, SB55, SB56, SB58, SB60, SB62, SB64, SB65, VL5060, VL5080, VL5090, VL530, VL540, VL550, VL570, VL600, VL6040, VL6050, VL6060, VL6070, VL6080, VL6090, VL610, VL620, VL630, VL640, VL660, VM3080, VM3080 AL, VM3090, VM340, VM370, VM4090, VM460, VN2080, VN2090, VN240, VN260, VN300, VX680, VX7090

REF.507A

TORNILLO -TUERCA PLACA KIT M10-40mm

Comp. 70770628,920009501

REF.507B

TORNILLO -TUERCA -ARANDELA M8-25mm

Comp. -

REF.509A

SENSOR TRANSMISIÓN diámetro 12 NPN.

Comp. 920019073

SB36, SB56, SB58, SB60, SB62, SB64, SB65

REF.509B

SENSOR TRANSMISIÓN diámetro12 PNP.

Comp. 920018843

SB33, SB35, SB36, SB53, SB55, SB56, SB58, SB60, SB62, SB64, SB65, TB10, TB15, VL5060, VL5080, VL5090, VL600, VL6040, VL6050, VL6060, VL6070, VL6080, VL6090, VL610, VL620, VL630, VL640, VL660, VM3080, VM3080 AL, VM3090, VM4090, VM460, VN2080, VN2090, VN240, VN260, VX680, VX7090

REF.509C

SENSOR INTERRUPTOR PROXIMIDAD diám. 18

Comp. 920019770

9060L GE, 9080L GE, 9090L GE, SB33, SB35, SB53, SB55, VL5060, VL5080, VL5090, VL530, VL540, VL550, VL570, VL600, VL6040, VL6050, VL6060, VL6070, VL6080, VL6090, VL610, VL620, VL630, VL640, VL660, VM3080, VM3080 AL, VM3090, VM340, VM370, VM4090, VM460, VN2080, VN2090, VN300, VX680, VX7090

REF.509D

DETECTOR EXTRACTOR

Comp. 87644844

9080N H, 9080N L, SB33, SB35, SB36, SB53, SB55, SB56, SB58, SB60, SB62, SB64, VL5060, VL5080, VL5090, VL530, VL540, VL550, VL570, VL600, VL6040, VL6050, VL6060, VL6070, VL6080, VL6090, VL610, VL620, VL630, VL640, VL660, VM3080, VM3080 AL, VM3090, VM340, VM370, VM4090, VM460, VN2080, VN2090, VN300, VX680, VX7090

REF.509F

SENSOR diámetro18 PNP.

Comp. 920018842

1620S, 2420, 2520, 2620, 2720, 9040L, 9040M, 9060L, 9060L GE, 9060L H, 9060L SH, 9080L, 9080L GE, 9080L H, 9080L SH, 9090L, 9090L GE, 9090L H, 9090L SH, 9090X, 9090X GE, 9090X H, 9090X OP, 9090X OP GE, SB33, SB35, SB36, SB52, SB53, SB54, SB55, SB56, SB58, SB60, SB62, SB64, SB65, TB10, TB15, VL5060, VL5080, VL5090, VL600, VL6040, VL6050, VL6060, VL6070, VL6080, VL6090, VL610, VL620, VL630, VL640, VL660, VM3080, VM3080 AL, VM3090, VM4090, VM460, VN2080, VN2090, VN240, VN260, VX680, VX7090

REF.509G

SENSOR

Comp. 87342073

8030L, 9030L, 9040L, 9040M, 9050L H, 9050L L, 9050L SH, 9060L, 9060L GE, 9060L H, 9060L SH, 9070L H, 9070L L, 9070L L TS, 9070L SH, 9070M, 9070N H TS, 9070N L, 9070N L TS, 9070 , 9080L, 9080L GE, 9080L H, 9080L SH, 9080N H, 9080N L, 9090L, 9090L GE, 9090L H, 9090L H T4, 9090L H TS, 9090L SH, 9090L SH T4, 9090L SH TS, 9090L T3, 9090X, 9090X GE, 9090X GE T3, 9090X GE T4, 9090X GE TS, 9090X H, 9090X H H, 9090X H T4, 9090X O, 9090X O GE, 9090X O GE T3, 9090X O GE T4, 9090X O GE TS, 9090X O H T4, 9090X O T3, 9090X O T4, 9090X O TS, 9090X OP, 9090X OP GE, 9090X T3, 9090X T4, 9090X TS, VX7090 - VENDIMIADORA (01/07 - 12/12), VX7090-OLIVES - VENDIMIADORA SÚPER INTENSIVA OLIVAS (10/10 - 12/13)

Todas las marcas comerciales pertenecen a sus respectivos propietarios y su uso es solo informativo.

Compruebe las Ref. antes.

WWW.EDUARDOREPUESTOSAGRICOLAS.COM

IVA no incluido

Transporte EU gratuito en pedidos 600€

NEW HOLLAND-BRAUD
COMPATIBLE

EDUARDO

REF.540A

TORNILLO-TUERCA autoblocante-ARANDELA M8X25 (Zn) SUJECIÓN GUIAS-CARCASA

Comp. 920019521,920008122,920011230

1620, 1620S, 2420, 2514, 2520, 2620, 2714, 2720, 7030L, 7030M, 7030M H, 8030L, 9030L, 9040L, 9040M, 9050L H, 9050L L, 9050L SH, 9060L, 9060L GE, 9060L H, 9060L SH, 9070L H, 9070L L, 9070L L T5, 9070L SH, 9070M, 9070N H T5, 9070N L, 9070N L T5, 9070 , 9080L, 9080L GE, 9080L H, 9080L SH, 9080N H, 9080N L, 9090L, 9090L GE, 9090L H, 9090L H T4, 9090L H T5, 9090L SH, 9090L SH T4, 9090L SH T5, 9090L T3, 9090X, 9090X GE, 9090X GE T3, 9090X GE T4, 9090X GE T5, 9090X H, 9090X H H, 9090X H T4, 9090X O, 9090X O GE, 9090X O GE T3, 9090X O GE T4, 9090X O GE T5, 9090X O H T4, 9090X O T3, 9090X O T4, 9090X O T5, 9090X OP, 9090X OP GE, 9090X T3, 9090X T4, 9090X T5, 5833, 5835, 5836, 5852, 5853, 5854, 5855, 5856, 5858, 5860, 5862, 5864, 5865, T140, T240, TB10, TB15, VL5060, VL5080, VL5090, VL530, VL540, VL550, VL570, VL600, VL6040, VL6050, VL6060, VL6070, VL6080, VL6090, VL610, VL620, VL630, VL640, VL660, VM3080, VM3080 AL, VM3090, VM340, VM370, VM4090, VM460, VN2080, VN2090, VN240, VN260, VN300, VX680,

REF.578A

TUERCA PARTIDA M8

Comp. 920019493

7030L, 7030M, 7030M H, 8030L, 9030L, 9040L, 9040M, 9050L H, 9050L L, 9050L SH, 9060L, 9060L GE, 9060L H, 9060L SH, 9070L H, 9070L L, 9070L L T5, 9070L SH, 9070M, 9070N H T5, 9070N L, 9070N L T5, 9070 , 9080L, 9080L GE, 9080L H, 9080L SH, 9080N H, 9080N L, 9090L, 9090L GE, 9090L H, 9090L H T4, 9090L H T5, 9090L SH, 9090L SH T4, 9090L SH T5, 9090L T3, 9090X, 9090X GE, 9090X GE T3, 9090X GE T4, 9090X GE T5, 9090X H, 9090X H H, 9090X H T4, 9090X O, 9090X O GE, 9090X O GE T3, 9090X O GE T4, 9090X O GE T5, 9090X O H T4, 9090X O T3, 9090X O T4, 9090X O T5, 9090X OP, 9090X OP GE, 9090X T3, 9090X T4, 9090X T5, 5833, 5835, 5836, 5852, 5853, 5854, 5855, 5856, 5858, 5860, 5862, 5864, 5865, TB10, TB15, VL5060, VL5080, VL5090, VL530, VL540, VL550, VL570, VL600, VL6040, VL6050, VL6060, VL6070, VL6080, VL6090, VL610, VL620, VL630, VL640, VL660, VM3080, VM3080 AL, VM3090, VM340, VM370, VM4090, VM460, VN2080, VN2090, VN240, VN260, VN300, VX680, VX7090

REF.578B

TUERCA PARTIDA M10

Comp. 920019492

7030L, 7030M, 7030M H, 8030L, 9030L, 9040L, 9040M, 9050L H, 9050L L, 9050L SH, 9060L, 9060L GE, 9060L H, 9060L SH, 9070L H, 9070L L, 9070L L T5, 9070L SH, 9070M, 9080L, 9080L GE, 9080L H, 9080L SH, 9080N H, 9080N L, 9090L, 9090L GE, 9090L H, 9090L H T4, 9090L H T5, 9090L SH, 9090L SH T4, 9090L SH T5, 9090L T3, 9090X, 9090X GE, 9090X GE T3, 9090X GE T4, 9090X GE T5, 9090X H, 9090X H H, 9090X H T4, 9090X O, 9090X O GE, 9090X O GE T3, 9090X O GE T4, 9090X O GE T5, 9090X O H T4, 9090X O T3, 9090X O T4, 9090X O T5, 9090X OP, 9090X OP GE, 9090X T3, 9090X T4, 9090X T5, 5833, 5835, 5836, 5852, 5853, 5854, 5855, 5856, 5858, 5860, 5862, 5864, 5865, TB10, TB15, VL5060, VL5080, VL5090, VL530, VL540, VL550, VL570, VL600, VL6040, VL6050, VL6060, VL6070, VL6080, VL6090, VL610, VL620, VL630, VL640, VL660, VM3080, VM3080 AL, VM3090, VM340, VM370, VM4090, VM460, VN2080, VN2090, VN240, VN260, VN300, VX680, VX7090

REF.578C

TUERCA PARTIDA M12

Comp. 920017399

1620, 1620S, 2420, 2520, 2620, 2720, 7030L, 7030M, 7030M H, 8030L, 9030L, 9040L, 9040M, 9050L H, 9050L L, 9050L SH, 9060L, 9060L GE, 9060L H, 9060L SH, 9070L H, 9070L L, 9070L L T5, 9070L SH, 9070M, 9080L, 9080L GE, 9080L H, 9080L SH, 9080N H, 9080N L, 9090L, 9090L GE, 9090L H, 9090L H T4, 9090L H T5, 9090L SH, 9090L SH T4, 9090L SH T5, 9090L T3, 9090X, 9090X GE, 9090X GE T3, 9090X GE T4, 9090X GE T5, 9090X H, 9090X H H, 9090X H T4, 9090X O, 9090X O GE, 9090X O GE T3, 9090X O GE T4, 9090X O GE T5, 9090X O H T4, 9090X O T3, 9090X O T4, 9090X O T5, 9090X OP, 9090X OP GE, 9090X T3, 9090X T4, 9090X T5, 5833, 5835, 5836, 5852, 5853, 5854, 5855, 5856, 5858, 5860, 5862, 5864, 5865, VL5060, VL5080, VL5090, VL530, VL540, VL550, VL570, VL600, VL6040, VL6050, VL6060, VL6070, VL6080, VL6090, VL610, VL620, VL630, VL640, VL660, VM3080, VM3080 AL, VM3090, VM340, VM370, VM4090, VM460, VN2080, VN240, VN260, VN300, VX680, VX7090

REF.578D

TUERCA PARTIDA M14

Comp. 920019392

7030M, 7030M H, 8030L, 9030L, 9040L, 9040M, 9050L H, 9050L L, 9050L SH, 9060L, 9060L GE, 9060L H, 9060L SH, 9070L H, 9070L L, 9070L L T5, 9070L SH, 9070M, 9080L, 9080L GE, 9080L H, 9080L SH, 9090L, 9090L GE, 9090L H, 9090L H T4, 9090L H T5, 9090L SH, 9090L SH T4, 9090L SH T5, 9090L T3, 9090X, 9090X GE, 9090X GE T3, 9090X GE T4, 9090X GE T5, 9090X H, 9090X H H, 9090X H T4, 9090X T3, 9090X T4, 9090X T5, 5833, 5835, 5836, 5853, 5855, 5856, 5858, 5860, 5862, 5864, 5865, VL5060, VL5080, VL5090, VL530, VL540, VL550, VL570, VL600, VL6040, VL6050, VL6060, VL6070, VL6080, VL6090, VL610, VL620, VL630, VL640, VL660, VM3080, VM3080 AL, VM3090, VM340, VM370, VM4090, VM460, VX680, VX7090

REF.578E

TUERCA PARTIDA M16

Comp. 920019650

7030L, 7030M, 7030M H, 8030L, 9030L, 9040L, 9040M, 9050L H, 9050L L, 9050L SH, 9060L, 9060L GE, 9060L H, 9060L SH, 9070L H, 9070L L, 9070L L T5, 9070L SH, 9070M, 9080L, 9080L GE, 9080L H, 9080L SH, 9090L, 9090L GE, 9090L H, 9090L H T4, 9090L H T5, 9090L SH, 9090L SH T4, 9090L SH T5, 9090L T3, 9090X, 9090X GE, 9090X GE T3, 9090X GE T4, 9090X GE T5, 9090X H, 9090X H H, 9090X H T4, 9090X O, 9090X O GE, 9090X O GE T3, 9090X O GE T4, 9090X O GE T5, 9090X O H T4, 9090X O T3, 9090X O T4, 9090X O T5, 9090X OP, 9090X OP GE, T140, T240, VL6060, VL6080, VL6090, VL620, VL640, VL660, VN2080, VX680, VX7090

REF.716A

MUEVE RODILLOS CINTAS TRANSPORTADORAS

Comp. 84205000

7030L, 7030M, 7030M H, 8030L, 9030L, 9040L, 9040M, 9050L H, 9050L L, 9050L SH, 9060L, 9060L GE, 9060L H, 9060L SH, 9070L H, 9070L L, 9070L L T5, 9070L SH, 9070M, 9080L, 9080L GE, 9080L H, 9080L SH, 9080N H, 9080N L, 9090L, 9090L GE, 9090L H, 9090L H T4, 9090L H T5, 9090L SH, 9090L SH T4, 9090L SH T5, 9090L T3, 9090X, 9090X GE, 9090X GE T3, 9090X GE T4, 9090X GE T5, 9090X H, 9090X H H, 9090X H T4, 9090X O, 9090X O GE, 9090X O GE T3, 9090X O GE T4, 9090X O GE T5, 9090X O H T4, 9090X O T3, 9090X O T4, 9090X O T5, 9090X OP, 9090X OP GE, 9090X T3, 9090X T4, 9090X T5, 5833, 5835, 5836, 5853, 5855, 5856, 5858, 5860, 5862, 5864, 5865, TB10, TB15, VL5060, VL5080, VL5090, VL530, VL540, VL550, VL570, VL600, VL6040, VL6050, VL6060, VL6070, VL6080, VL6090, VL610, VL620, VL630, VL640, VL660, VM3080, VM3080 AL, VM3090, VM340, VM370, VM4090, VM460, VN2080, VN2090, VN240, VN260, VN300, VX680, VX7090

REF.716B

MUEVE CINTAS DESPALILLADORAS ROSAS

Comp. 84122562

7030M, 7030M H, 8030L, 9040L, 9040M, 9050L H, 9050L L, 9050L SH, 9060L, 9060L GE, 9060L H, 9070L H, 9070L L, 9070L L T5, 9070L SH, 9070M, 9080L, 9080L GE, 9080L H, 9090L, 9090L GE, 9090L H, 9090L H T4, 9090L H T5, 9090L SH T4, 9090L SH T5, 9090L T3, 9090X, 9090X GE T3, 9090X GE T4, 9090X GE T5, 9090X H, 9090X H H, 9090X T3, VL5060, VN2090

REF.716C

MUEVE EJES DEDOS DESPALILLADORAS

Comp. 84122561

7030L, 7030M, 7030M H, 8030L, 9030L, 9040L, 9040M, 9050L H, 9050L L, 9050L SH, 9060L, 9060L GE, 9060L H, 9070L H, 9070L L, 9070L L T5, 9070L SH, 9070M, 9080L, 9080L GE, 9080L H, 9080N H, 9080N L, 9090L, 9090L GE, 9090L H, 9090L H T4, 9090L H T5, 9090L SH T4, 9090L SH T5, 9090L T3, 9090X, 9090X GE T3, 9090X GE T4, 9090X GE T5, 9090X H, 9090X H H, 9090X H T4, 9090X T3, 9090X T4, 9090X T5, VL5060, VN2080, VN2090

REF.716D

MUEVE SINFINES HIDRÁULICOS CABEZAL OLIVE

Comp. 920009489

9060L GE, 9080L GE, 9090L GE, 9090X GE, 9090X GE T3, 9090X GE T4, 9090X GE T5, 9090X O, 9090X O GE, 9090X O GE T3, 9090X O H T4, 9090X O T3, 9090X O T4, 9090X O T5, 9090X OP, 9090X OP GE, T140, T240, VL6060, VL6080, VL6090, VL620, VL640, VL660, VN2080, VX680, VX7090

REF.716E

MUEVE VENTILADORES EXTRACCIÓN SUPERIOR DERECHO

Comp. 920019656

7030L, 7030M, 7030M H, 8030L, 9040L, 9040M, 9060L, 9060L GE, 9060L H, 9060L SH, 9080L, 9080L GE, 9080L H, 9080L SH, 9090L, 9090L GE, 9090L H, 9090L SH, 9090X, 9090X GE, 9090X H, 9090X H H, SB33, SB35, SB53, SB55, VL5060, VL5080, VL5090, VL530, VL540, VL550, VL570, VL600, VL6040, VL6050, VL6060, VL6070, VL6080, VL6090, VL610, VL620, VL630, VL640, VL660, VM3080, VM3080 AL, VM3090, VM340, VM370, VM4090, VM460, VN2090, VN300, VX680, VX7090

REF.716H

MUEVE VENTILADORES EXTRACCIÓN SUPERIOR IZQUIERDO

Comp. 920019657

7030L, 7030M, 7030M H, 8030L, 9040L, 9040M, 9060L, 9060L GE, 9060L H, 9060L SH, 9080L, 9080L GE, 9080L H, 9080L SH, 9090L, 9090L GE, 9090L H, 9090L SH, 9090X, 9090X GE, 9090X H, 9090X H H, SB33, SB35, SB53, SB55, VL5060, VL5080, VL5090, VL530, VL540, VL550, VL570, VL600, VL6040, VL6050, VL6060, VL6070, VL6080, VL6090, VL610, VL620, VL630, VL640, VL660, VM3080, VM3080 AL, VM3090, VM340, VM370, VM4090, VM460, VN2090, VN300

REF.716J

MUEVE VENTILADORES EXTRACCIÓN SUPERIOR

Comp. 929918182

9090 OLIVE,SB35,SB60

REF.733A

GANCHO

Comp. 920017733

1620, 1620S, 7030L, 7030M, 7030M H, 8030L, 9030L, 9040L, 9040M, 9050L H, 9050L L, 9050L SH, 9060L, 9060L GE, 9060L H, 9060L SH, 9070L H, 9070L L, 9070L L T5, 9070L SH, 9070M, 9080L, 9080L GE, 9080L H, 9080L SH, 9090L, 9090L GE, 9090L H, 9090L H T4, 9090L H T5, 9090L SH, 9090L SH T4, 9090L SH T5, 9090L T3, 9090X, 9090X GE, 9090X GE T3, 9090X GE T4, 9090X GE T5, 9090X H, 9090X H H, 9090X H T4, 9090X O GE T3, 9090X O GE T4, 9090X O GE T5, 9090X O H T4, 9090X O T3, 9090X O T4, 9090X O T5, 9090X T3, 9090X T4, 9090X T5, 5833, 5835, 5836, 5853, 5855, 5856, 5858, 5860, 5862, 5864, 5865, TB10, TB15, VL5060, VL5080, VL5090, VL530, VL540, VL550, VL570, VL600, VL6040, VL6050, VL6060, VL6070, VL6080, VL6090, VL610, VL620, VL630, VL640, VL660, VM3080, VM3080 AL, VM3090, VM340, VM370, VM4090, VM460, VN2080, VN2090, VN240, VN260, VN300, VX680, VX7090

REF.743B

TORNILLO PLANO M8X20 cabeza allen+TUERCA

Comp. 920017518,920008122

9030L, 9050L H, 9050L L, 9070L H, 9070L L, 9070L L T5, 9070M, 9090L H T4, 9090L H T5, 9090L T3, 9090X H T4, 9090X T3, 9090X T4, 9090X T6

REF.745A

PLACA DE DESGASTE 1mm

Comp. 84602774

9090X O, 9090X O GE, 9090X O GE T3, 9090X O GE T4, 9090X O GE T5, 9090X O H T4, 9090X O T3, 9090X O T4, 9090X O T5, 9090X OP, 9090X OP GE, VX7090

REF.710A

PIÑÓN DERECHO

Comp. 944029254,944005

7030L, 7030M, 7030M H, 8030L, 9030L, 9040L, 9040M, 9050L H, 9050L L, 9050L SH, 9060L, 9060L GE, 9060L H, 9060L SH, 9070L H, 9070L L, 9070L L T5, 9070L SH, 9070M, 9080L, 9080L GE, 9080L H, 9080L SH, 9080N H, 9080N L, 9090L, 9090L GE, 9090L H, 9090L H T4, 9090L H T5, 9090L SH, 9090L SH T4, 9090L SH T5, 9090L T3, 9090X, 9090X GE, 9090X GE T3, 9090X GE T4, 9090X GE T5, 9090X H, 9090X H H, 9090X H T4, 9090X O, 9090X O GE, 9090X O GE T3, 9090X O GE T4, 9090X O GE T5, 9090X O H T4, 9090X O T3, 9090X O T4, 9090X O T5, 9090X OP, 9090X OP GE, 9090X T3, 9090X T4, 9090X T5, 5833, 5835, 5836, 5853, 5855, 5856, 5858, 5860, 5862, 5864, 5865, VL5060, VL5080, VL5090, VL530, VL540, VL550, VL570, VL600, VL6040, VL6050, VL6060, VL6070, VL6080, VL6090, VL610, VL620, VL630, VL640, VL660, VM3080, VM3080 AL, VM3090, VM340, VM370, VM4090, VM460, VN2080, VN2090, VN240, VN260, VN300, VX680, VX7090

REF.710B

PIÑÓN IZQUIERDO

Comp. 944029255,944005

7030L, 7030M, 7030M H, 8030L, 9030L, 9040L, 9040M, 9050L H, 9050L L, 9050L SH, 9060L, 9060L GE, 9060L H, 9060L SH, 9070L H, 9070L L, 9070L L T5, 9070L SH, 9070M, 9080L, 9080L GE, 9080L H, 9080L SH, 9080N H, 9080N L, 9090L, 9090L GE, 9090L H, 9090L H T4, 9090L H T5, 9090L SH, 9090L SH T4, 9090L SH T5, 9090L T3, 9090X, 9090X GE, 9090X GE T3, 9090X GE T4, 9090X GE T5, 9090X H, 9090X H H, 9090X H T4, 9090X O, 9090X O GE, 9090X O GE T3

REF.711F

LONA DERECHA7090 olives, 9090 olives

Comp. 84324502

9090X O, 9090X O GE, 9090X O GE T3, 9090X O GE T4, 9090X O GE T5, 9090X O H T4, 9090X O T3, 9090X O T4, 9090X O T5, 9090X OP, 9090X OP GE, VX7090

REF.711G

LONA IZQUIERDA7090 olives,9090 olives

Comp. 84324501

9090X O, 9090X O GE, 9090X OP, 9090X OP GE, VX7090

IVA no incluido

Transporte EU gratuito en pedidos 600€

Todas las marcas comerciales pertenecen a sus respectivos propietarios y su uso es solo informativo.

WWW.EDUARDOREPUESTOSAGRICOLAS.COM

Compruebe las Ref. antes.

NEW HOLLAND-BRAUD COMPATIBLE

EDUARDO

PATINES - GUÍAS DESPALILLADORA (ESPESOR 26mm , 5mm MÁS que las referencias del fabricante)

SB, VL, VX (26mm, +5mm)

REF.254A

Comp. 944027443

SB33, SB35, SB36, SB53, SB55, SB56, SB58, SB60, SB62, SB64, SB65, VL5060, VL5080, VL5090, VL530, VL540, VL550, VL570, VL600, VL6040, VL6050, VL6060, VL6070, VL6080, VL6090, VL610, VL620,

REF.255A

Comp. 944030770

SB33, SB35, SB36, SB53, SB55, SB56, SB58, SB60, SB62, SB64, SB65, VL5060, VL5080, VL5090, VL530, VL540, VL550, VL570, VL600, VL6040, VL6050, VL6060, VL6070, VL6080, VL6090, VL610, VL620,

REF.256A

Comp. 944030771

SB33, SB35, SB36, SB53, SB55, SB56, SB58, SB60, SB62, SB64, SB65, VL5060, VL5080, VL5090, VL530, VL540, VL550, VL570, VL600, VL6040, VL6050, VL6060, VL6070, VL6080, VL6090, VL610, VL620,

REF.257A

Comp. 944030810

SB33, SB35, SB36, SB53, SB55, SB56, SB58, SB60, SB62, SB64, SB65, VL600, VL6040, VL6050, VL6060, VL6070, VL6080, VL6090, VL610, VL620, VL630, VL640, VL660, VM4090, VM460, VX680, VX7090

REF.258A

Comp. 944030811

SB33, SB35, SB36, SB53, SB55, SB56, SB58, SB60, SB62, SB64, SB65, VL600, VL6040, VL6050, VL6060, VL6070, VL6080, VL6090, VL610, VL620, VL630, VL640, VL660, VM4090, VM460, VX680, VX7090

REF.259A

Comp. 944030808

SB33, SB35, SB36, SB53, SB55, SB56, SB58, SB60, SB62, SB64, SB65, VL600, VL6040, VL6050, VL6060, VL6070, VL6080, VL6090, VL610, VL620, VL630, VL640, VL660, VM4090, VM460, VX680, VX7090

REF.260A

Comp. 944030809

SB33, SB35, SB36, SB53, SB55, SB56, SB58, SB60, SB62, SB64, SB65, VL600, VL6040, VL6050, VL6060, VL6070, VL6080, VL6090, VL610, VL620, VL630, VL640, VL660, VM4090, VM460, VX680, VX7090

REF.261A

Comp. 944027448 (94cm)

SB33, SB35, SB36, SB53, SB55, SB56, SB58, SB60, SB62, SB64, VL600, VL6040, VL6050, VL6060, VL6070, VL6080, VL6090, VL610, VL620, VL630, VL640, VL660, VM4090, VM460, VX680, VX7090

REF.261B

Comp. 944030102, 944030101 (84cm)

SB33, SB35, SB53, SB55, VL5060, VL5080, VL5090, VL530, VL540, VL550, VL570, VM3080, VM3090, VM340, VM370, VN2090, VN300

REF.266A

Comp. 944031960

SB36, SB56, SB58, SB60, SB62, SB64, SB65, VL600, VL6040, VL6050, VL6060, VL6070, VL6080, VL6090, VL610, VL620, VL630, VL640, VL660, VM4090, VM460, VX680, VX7090

REF.262A

Comp. 87629867

KIT 18: 4x254A, 2x255A, 2x256A, 2x257A, 2x258A, 2x259A, 2x260A, 2x266A

REF.262B

Comp. 84122582

KIT 16: 4x254A, 2x255A, 2x256A, 2x257A, 2x258A, 2x259A, 2x260A

REF.104A

SACUDIDOR PARA LEVANTAR RAMAS OLIVAR 935mm

Comp. 265574

9090X, 9090X GE, 9090X GE T3, 9090X GE T4, 9090X GE T5, 9090X H, 9090X H H, 9090X H T4, 9090X O, 9090X O GE, 9090X O GE T3, 9090X O GE T4, 9090X O GE T5, 9090X O H T4, 9090X O T3, 9090X O T4,

REF.299A

¡ NUEVO !

EJE DESGRANADORES

Comp. 87398713

VL5060,9050L,9050L,9090L,VL6040,9060L,9040M,9080L,VL630,VL6070,VM460,VN2080,VX680,9090X,VL530,9070M,VL620,9050L,VM3090,VM340,VX7090,VL600,VL540,VL610,VL550,VL5080,VL570,VL6090,VL660,

REF.721A

LIMPIEZA DESGRANADORES

Comp. 944031640

9090X GE T5, 9090X GE T4, 9090X GE T3, SB33, SB53, SB55, VL5060, VL5080, VL5090, VL530, VL540, VL550, VL570, VL600, VL6040, VL6050, VL6060, VL6070, VL6080, VL6090, VL610, VL620, VL630,

SB33, SB35, SB55, VL5080, VL5090, VL530, VL540, VL550, VM340, VM380

REF.262C

Comp. KIT 16 PIEZAS

4x254A, 2x255A, 2x256A, 2x581A, 2x582A, 2x583A, 2x583B

REF.581A

Comp. 944032089

SB33, SB35, SB53, SB55, VL5060, VL5080, VL5090, VL530, VL540, VL550, VL570, VM3080, VM3080 AL, VM3090, VM340, VM370, VN2090

REF.582A

Comp. 944030230

SB33, SB35, SB53, SB55, VL5060, VL5080, VL5090, VL530, VL540, VL550, VL570, VM3080, VM3080 AL, VM3090, VM340, VM370, VN2090

REF.583A

Comp. 944032090

SB33, SB35, SB53, SB55, VL5060, VL5080, VL5090, VL530, VL540, VL550, VL570, VM3080, VM3080 AL, VM3090, VM340, VM370, VN2090

REF.583B

Comp. 944030100

SB33, SB35, SB53, SB55, VL5060, VL5080, VL5090, VL530, VL540, VL550, VL570, VM3080, VM3080 AL, VM3090, VM340, VM370, VN2090

9040M, 9040L, 9060L, 9090L, 9080L,9090X

REF.264A

Comp. 84234229

7030L, 7030M, 7030M H, 8030L, 9030L, 9040L, 9040M, 9050L H, 9050L L, 9060L, 9060L GE, 9060L H, 9060L SH, 9070L H, 9070L L, 9070L L T5, 9070M, 9080L, 9080L GE, 9080L H, 9080L SH, 9090L, 9090L

REF.265A

Comp. 84248137

7030L, 7030M, 7030M H, 8030L, 9030L, 9040L, 9040M, 9050L H, 9050L L, 9060L, 9060L GE, 9060L H, 9060L SH, 9070L H, 9070L L, 9070L L T5, 9070M, 9080L, 9080L GE, 9080L H, 9080L SH, 9090L, 9090L

REF.266B

Comp. 84243927

7030L, 7030M, 7030M H, 8030L, 9040L, 9040M, 9060L, 9060L GE, 9060L H, 9060L SH, 9080L, 9080L GE, 9080L H, 9080L SH, 9090L, 9090L GE, 9090L H, 9090X, 9090X H, 9090X H H

REF.267A

Comp. 84248147

9040L, 9040M, 9080L, 9090L, 9090X

REF.268A

Comp. 84248148

7030L, 7030M, 7030M H, 8030L, 9040L, 9040M, 9060L, 9060L GE, 9060L H, 9060L SH, 9080L, 9080L GE, 9080L H, 9080L SH, 9090L, 9090L GE, 9090L H, 9090X, 9090X H, 9090X H H

REF.269A

Comp. KIT 18 PIEZAS

12x264A, 2x265A, 4x266B

REF.719A

Comp. 84243939

7030L, 7030M, 7030M H, 8030L, 9040L, 9040M, 9060L, 9060L GE, 9060L H, 9060L SH, 9080L, 9080L GE, 9080L H, 9080L SH, 9090L, 9090L GE, 9090L H, 9090X, 9090X H, 9090X H H

REF.720A

Comp. 87483704

7030L, 7030M, 7030M H, 8030L, 9030L, 9040L, 9040M, 9050L H, 9050L L, 9050L SH, 9060L, 9060L GE, 9060L H, 9060L SH, 9070L H, 9070L L, 9070L L T5, 9070L SH, 9070M, 9080L, 9080L GE, 9080L H, 9080L SH, 9090L, 9090L GE, 9090L H, 9090L H T4, 9090L H T5, 9090L SH, 9090L SH T4, 9090L SH T5, 9090L T3, 9090X, 9090X GE, 9090X GE T3, 9090X GE T4, 9090X GE T5, 9090X H, 9090X H H, 9090X H T4, 9090X T3, 9090X T4, 9090X T5

REF.738A

Comp. 84287465

7030L, 7030M, 7030M H, 8030L, 9040L, 9040M, 9050L L, 9060L, 9060L GE, 9060L H, 9070L L, 9070L L T5, 9070M, 9080L, 9080L GE, 9080L H, 9080N H, 9080N L, 9090L, 9090L GE, 9090L H, 9090L H T4, 9090L H T5, 9090L T3, 9090X, 9090X H, 9090X H H

REF.738B

Pcs.

12x264A, 2x265A, 4x266B, 1x267A, 1x267B, 4x719A, 24x738A

Compruebe las Ref. antes.

Todas las marcas comerciales pertenecen a sus respectivos propietarios y su uso es solo informativo.

WWW.EDUARDOREPUESTOSAGRICOLAS.COM

IVA no incluido

Transporte EU gratuito en pedidos 600€

NEW HOLLAND-BRAUD COMPATIBLE

EDUARDO

NYLON - GUÍAS DESPALILLADORA (ESPESOR 26mm , 6mm MÁS que las referencias del fabricante)

9070L L, 9050L H, 9050L L, 9070L H, 9030L H T4, 9070M, 9090X GE T4, 9090 H T4 (26mm , orig + 6mm)

REF.265A	REF.269B	REF.756	REF.741A	REF.741B
Comp. 84248137	Comp. KIT (28 uds)	Comp. 47994115	Comp. 47966974	Comp. 51417647
7030L, 7030M, 7030M H, 8030L, 9030L, 9040L, 9040M, 9050L H, 9050L L, 9060L, 9060L GE, 9060L H, 9060L SH, 9070L H, 9070L L, 9070L L T5, 9070M, 9080L, 9080L GE, 9080L H, 9080L SH, 9090L, 9090L GE, 9090L H, 9090L H T4, 9090L H T5, 9090L T3, 9090X, 9090X H, 9090X H H, 9090X H T4, 9090X T3, 9090X T4, 9090X T5	2x265A, 4x741A, 2x741B, 2x741C, 4x741D, 2x741E, 2x741F, 8x741G, 1x742C, 1x742D	9030L,9050L,9070L KIT28u(4x756A+4x757B+1X742C+1X742D+4X741A+12X264A+2X265A)	9030L, 9050L H, 9050L L, 9070L H, 9070L L, 9070L L T5, 9070M, 9090L H T4, 9090L H T5, 9090L T3, 9090X H T4, 9090X T3, 9090X T4, 9090X T5	9050L H, 9050L L, 9070L H, 9070L L, 9070L L T5, 9090L H T4, 9090L H T5, 9090L T3, 9090X H T4, 9090X T3, 9090X T4, 9090X T5

REF.741C	REF.741D	REF.741E	REF.741F	REF.741G
Comp. 51417695	Comp. 51417642	Comp. 51417655	Comp. 51417665	Comp. 51417653 (78cm)
9050L H, 9050L L, 9070L H, 9070L L, 9070L L T5, 9090L H T4, 9090L H T5, 9090L T3, 9090X H T4, 9090X T3, 9090X T4, 9090X T5	9050L H, 9050L L, 9070L H, 9070L L, 9070L L T5, 9090L H T4, 9090L H T5, 9090L T3, 9090X H T4, 9090X T3, 9090X T4, 9090X T5	9050L H, 9050L L, 9070L H, 9070L L, 9070L L T5, 9090L H T4, 9090L H T5, 9090L T3, 9090X H T4, 9090X T3, 9090X T4, 9090X T5	9050L H, 9050L L, 9070L H, 9070L L, 9070L L T5, 9090L H T4, 9090L H T5, 9090L T3, 9090X H T4, 9090X T3, 9090X T4, 9090X T5	9050L H, 9050L L, 9070L H, 9070L L, 9070L L T5, 9090L H T4, 9090L H T5, 9090L T3, 9090X H T4, 9090X T3, 9090X T4, 9090X T5

REF.742C	REF.742D	★ REF.777A	REF.756A	REF.757B
Comp. 48145277,47966940	Comp. 48145279,4766939	Comp. 47476692	Comp. 47890322 (1m)	Comp. 47890324 (1,06 m)
9030L, 9050L H, 9050L L, 9070L H, 9070L L, 9070L L T5, 9070M, 9090L H T4, 9090L H T5, 9090L T3, 9090X H T4, 9090X T3, 9090X T4, 9090X T5	9030L, 9050L H, 9050L L, 9070L H, 9070L L, 9070L L T5, 9070M, 9090L H T4, 9090L H T5, 9090L T3, 9090X H T4, 9090X T3, 9090X T4, 9090X T6	SERIE 9000	9030L, 9030LT5, 9050LH, 9050LHT5, 9050LL, 9050LLT5, 9070LH, 9070LHT5, 9070LL, 9070LLT5, 9090LHT4, 9090LHT5, 9070MT5, 9070M, 9090XT4, 9090XT5, 9050LH, 9070LH, 9090LHT5	9030L, 9030LT5, 9050LH, 9050LHT5, 9050LL, 9050LLT5, 9070LH, 9070LHT5, 9070LL, 9070LLT5, 9090LHT4, 9090LHT5, 9070MT5, 9070M, 9090XT4, 9090XT5, 9050LH, 9070LH, 9090LHT6
20,79€/u	20,79€/u	374,00€/u	45,10€/u	46,20€/u

REF.728A	REF.727A	★ REF.509H	REF.755B	REF.540B
		¡ NUEVO !		
ELECTROVALVULA DE SOLENOIDE	PIÑON 25 DIENTES	SENSOR VENTILADOR	SILENT BLOCK SACUDIDOR 9080N	TORNILLO HEX. M8X35MM+ARANDELA +TUERCA
Comp. 920018591,70052580	Comp. 87532045,9440002	Comp. 84058860	Comp. 920019036	Comp. 920019522
SB33, SB35, SB36, SB52, SB53, SB54, SB55, SB56, SB58, SB60, SB62, SB64, SB65, TB10, TB15	7030L, 9030L, 9050L L, 9070L L, 9070L L T5, 9090L T3, 9090X, 9090X GE, 9090X GE T3, 9090X GE T4, 9090X GE T5, 9090X H, 9090X H H, 9090X H T4, 9090X T3, 9090X T4, 9090X T5, VLS060, VM3080, VX7090	8030L, 9030L, 9040L, 9040M, 9050L H, 9050L L, 9050L SH, 9060L, 9060L GE, 9060L H, 9060L SH, 9070L H, 9070L L, 9070L L T5, 9070L SH, 9070M, 9070N H T5, 9070N L, 9070N L T5, 9070 , 9080L, 9080L GE, 9080L H, 9080L SH, 9080N H, 9080N L, 9090L, 9090L GE, 9090L H, 9090L H T4, 9090L H T5, 9090L SH, 9090L SH T4, 9090L SH T5, 9090L T3,	9080N	9000, 7000, 8000, VL, SB, VN, VX

★ REF.754A	★ REF.299B	★ REF.519D
¡ NUEVO !	¡ NUEVO !	¡ NUEVO !
SEPARADOR	BRIDA	CASQUILLO PARTIDO DIAM65
Comp. 84470398	Comp. 944022084	Comp. 48025605
9000L, 9000M, 9000X	7030, 8030, SERIE 9000, SERIE	8.50L,8030L,9050L,9060L,9070L,9080L

★ REF.727B	★ REF.727C	★ REF.299C	★ REF.778B	★ REF.778A*
¡ NUEVO !	¡ NUEVO !	¡ NUEVO !	¡ NUEVO !	¡ NUEVO !
PIÑON 43 DIENTES	PIÑON 40 DIENTES	PIEZA DE SOPORTE	COJINETE BOLAS VENTILADOR 42/80/42	VENTILADOR LIMPIEZA
Comp. 84303278	Comp. 84325670	Comp. 84255402	Comp. 920018181	Comp. 51459182, 944005235
11,90, 10,90, 9090OLIVES, 7090OLIVES	11.90X, 10.90X, 9090X OLIVES, VX7090 OLIVES	9040L, 9060, 9080, 9090L	7030, 8030, SERIE 9000, SERIE VL, VM	SERIE 9000, VL, SB

NEW HOLLAND-BRAUD
COMPATIBLE

EDUARDO

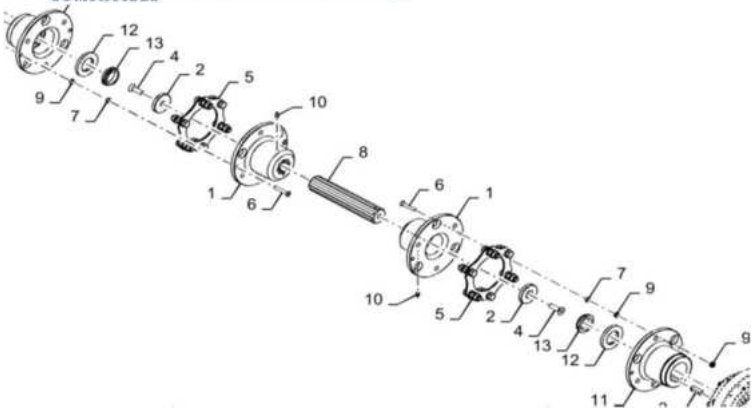

REF.744A

DEFLECTOR

Comp. 944033500

9090X, 9090X GE, 9090X GE T3, 9090X GE T4, 9090X GE T5, 9090X H, 9090X H H, 9090X H T4, 9090X O, 9090X O GE, 9090X O GE T3, 9090X O GE T4, 9090X O GE T5, 9090X O H T4, 9090X O T3, 9090X O T4, 9090X O T5, 9090X OP, 9090X OP GE, 9090X T3, 9090X T4, 9090X T5, SB65, VX680, VX7090

★ REF.779A

¡ NUEVO !

CONTRAEJE

Comp. 47503574

N.8: 11.90X, 10,90X, 9090X, 9090X OLIVES, VX7090, VX7090 OLIVES

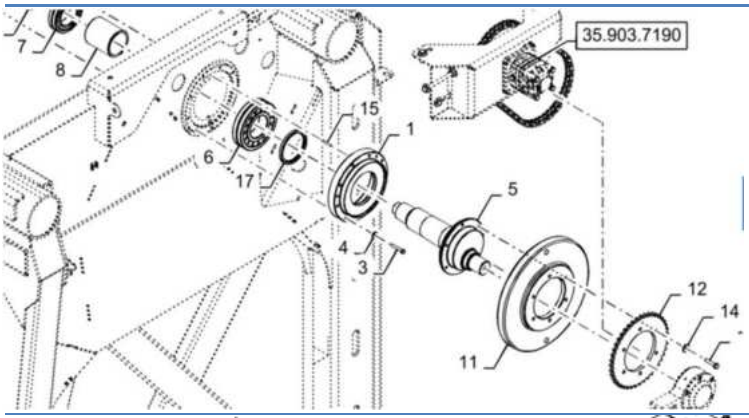

★ REF.779D

¡ NUEVO !

EJE

Comp. 84520440

11.90X, 10.90X, 9090X, 9090X OLIVES, VX7090, VX7090 OLIVES

★ REF.779C

¡ NUEVO !

CUBO

Comp. 47507921

Nº1.:11.90X, 10.90X, 9090X, 9090X OLIVES, VX7090, VX9090 OLIVES

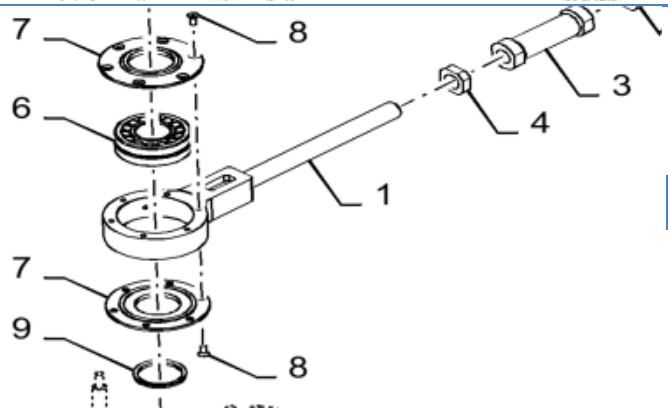

REF.732P

¡ NUEVO !

COJINTE RODILLOS 50X110X40

Comp. 84465337

11.90X, 10.90X, 9090X OLIVES, VX7090 OLIVES

REF.779B

¡ NUEVO !

CUBO

Comp. 47504193

Nº11.: 11.90X, 10.90X ,9090X, 9090X OLIVES, VX7090, VX7090 OLIVES

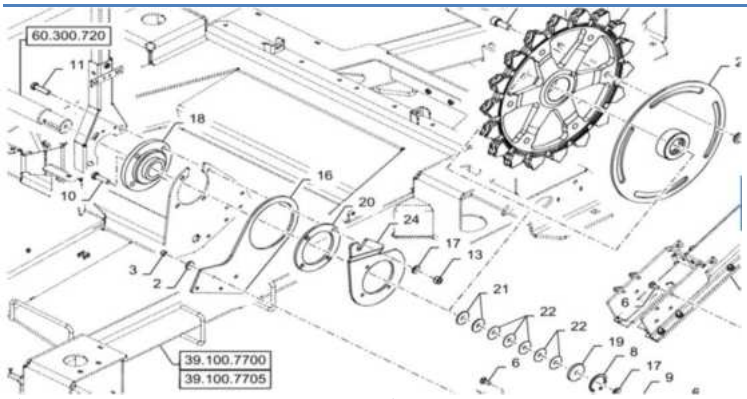

★ REF.779E

¡ NUEVO !

COJINETE DE BRIDA

Comp. 920017392

11.90X, 10.90X, 9000, VL, SB

★ REF.779F

¡ NUEVO !

COJINETE 50/110/62

Comp.

11.90X, 10.90X, 9000, VL, SB

★ REF.780A

CORREDERA

Comp. 87490576

9040L, 9040M, 9050L, 9060L, 9070L, 9080L, 9090L

★ REF.780B

PLACA PATIN

Comp. 87644826

9040L, 9040M, 9050L, 9060L, 9070L, 9080L, 9090L

★ REF.780C

GUÍA

Comp. 94400520

VL600, VL6040, VL6050, VL6060, VL6070, VL6090 ,VL610, VL620, VL630, VL640, VM4090, VM460 ,SB36, SB56, SB58, SB60, SB62, SB64

★ REF.780D

GUÍA

Comp. 944027208

VL600, VL6040, VL6050, VL6060, VL6070, VL6090, VL610, VL620, VL630, VL640, VM4090, VM460

Compruebe las Ref. antes.

Todas las marcas comerciales pertenecen a sus respectivos propietarios y su uso es solo informativo.

WWW.EDUARDOREPUESTOSAGRICOLAS.COM

IVA no incluido

Transporte EU gratuito en pedidos 600€

11.90 X

REF.747A*	REF.747B*	REF.748A*	REF.748B*	REF.293P
CESTA MUY GRANDE DERECHA 9000XXL	CESTA MUY GRANDE IZQUIERDA 9000XXL	KIT 10 CESTAS DERECHA 9000XXL	KIT 10 CESTAS IZQUIERDA 9000XXL	CINTA OLIVE CENTRAL 399X2435mm
Comp. 91743106	**Comp. 91743105**	**Comp. 91767999**	**Comp. 91768004**	**Comp. 90337361**
11.90X	11.90X	11.90X	11.90X	11.90X

REF.749A	REF.750A	REF.751A	REF.752A	REF.293Q
CHAPA BASE 9000XXL	CHAPA SUPERIOR 9000XXL	RASCADOR INOX. DERECHA 9000XXL	RASCADOR INOX. IZQUIERDA 9000XXL	CINTA OLIVE LATERAL 400x2030MM
Comp. 90443515	**Comp. 90443517**	**Comp. 90443909**	**Comp. 90443906**	**Comp. 51687092**
11.90X	11.90X	11.90X	11.90X	11.90X

REF.753A	☆ REF.295U ¡ NUEVO !	☆ REF.295W ¡ NUEVO !	☆ REF.294J	☆ REF.294K
ARTICULACION OLIVES	RODILLO MOTOR 11.90/9080N	RODILLO REENVIO 11.90/9080N	FIJADOR CINTA 9 ORIFICIOS(en alum)	UNIÓN EN L CINTA 9 ORIFICIOS (inox)
Comp. 84278326	**Comp. 47364561**	**Comp. 51584931**	**Comp. -**	**Comp.**
9000X,9000XXL,VX OLIVES	11.90X, 9080N	11.90X, 9080N	11.90X	11.90X

11.90 X

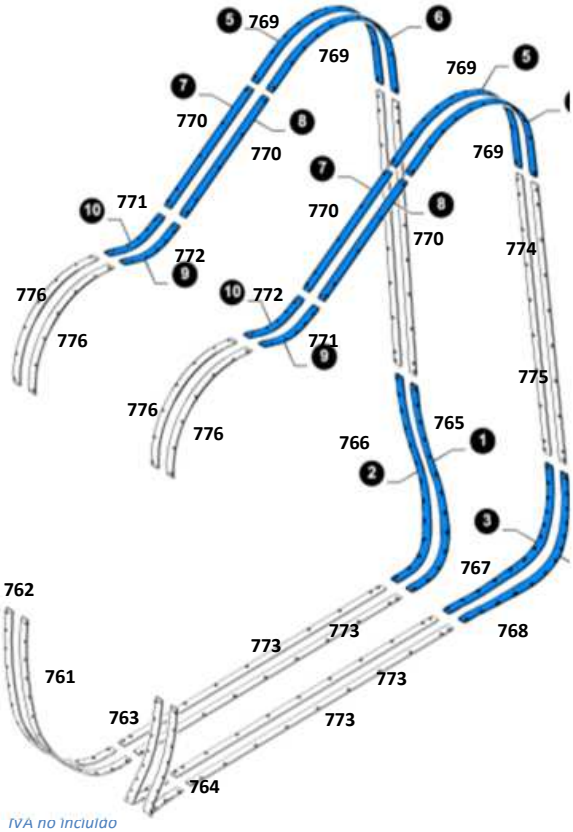

	DELANTERAS	
REF.761 ☆	DERECHA INTERIOR	Comp. 51597371
REF.762 ☆	DERECHA EXTERIOR	Comp. 51597372
REF.763 ☆	IZQUIERDA INTERIOR	Comp. 51597373
REF.764 ☆	IZQUIERDA EXTERIOR	Comp. 51597374
	TRASERAS	
REF.765 ☆	DERECHA INTERIOR	Comp. 51597375
REF.766 ☆	DERECHA EXTERIOR	Comp. 51597377
REF.767 ☆	IZQUIERDA INTERIOR	Comp. 51597376
REF.768 ☆	IZQUIERDA EXTERIOR	Comp. 51597378
	OTRAS	
REF.769 ☆	SUPERIOR TRASERA	Comp. 51577861
REF.770 ☆	RECTA PIÑON	Comp. 51577859
REF.771 ☆	PIÑON EXTERIOR DERECHA/IZQUIERDA	Comp. 51632507
REF.772 ☆	PIÑON INTERIOR DERECHA/IZQUIERDA	Comp. 51632707
REF.776 ☆	CURVA DELANTERA SUPERIOR	Comp. 51632509
REF.773 ☆	RECTA TRASERA SUPERIOR	Comp. 51577839
REF.774 ☆	RECTA TRASERA SUPERIOR	Comp. 90420851
REF.775 ☆	RECTA TRASERA INFERIOR	Comp. 944034405

NEW HOLLAND-BRAUD COMPATIBLE

EDUARDO

7090X OLIVE — ACERO ANTIFRICCION

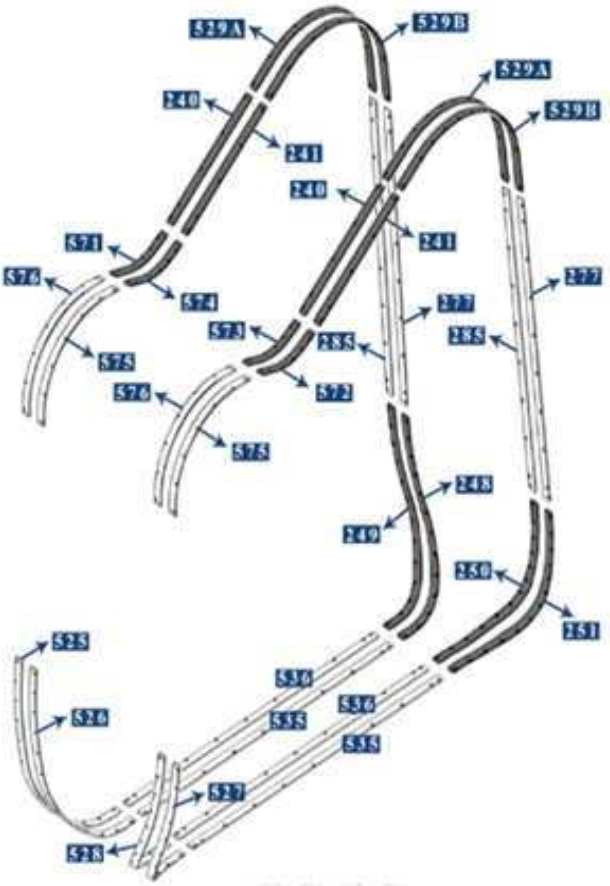

		DELANTERAS	
REF.525		Inferior izq. Ext	Comp. 87486375
REF.526		Inferior izq. Int.	Comp. 87486377
REF.527		Inferior dcha. Ext.	Comp. 87486376
REF.528		Inferior dcha. Int.	Comp. 87486378
		TRASERAS	
REF.248		Inferior dcha. Int	Comp. 944023837
REF.249		Inferior dcha. Ext	Comp. 944023838
REF.250		Inferior izqda. Int	Comp. 944023835
REF.251		Inferior izqda. Ext	Comp. 944023836
		OTRAS	
REF.529A		Curva trasera	Comp. 944020859
REF.529B		Curva trasera	Comp. 944024537
REF.240		Superior izquierda	Comp. 944015638
REF.241		Superior derecha	Comp. 944015639
REF.571	**5**	Curva piñón izqdo	Comp. 87499779
REF.572	**5**	Curva piñón izqdo	Comp. 87499781
REF.573	**5**	Curva piñón dcho	Comp. 87499780
REF.574	**5**	Curva piñón dcho	Comp. 87499778
REF.575		Curva delantera	Comp. 944032892
REF.576		Curva delantera	Comp. 944032893
REF.535		Recta inferior larga	Comp. 87486373
REF.536		Recta inferior larga	Comp. 87486374
REF.285		Recta trasera larg	Comp. 944020863
REF.277		Recta trasera larga	Comp. 944020862
REF.543A		KIT 8 PIEZAS	1x525 1x526 1x527 1x528 1x248 1x249 1x250 1x251
REF.577		KIT 16 PIEZAS	1x248 1x249 1x250 1x251 1x571 1x572 1x573 1x574 2x529A 2x529B 2x240 2x241
REF.543B		KIT 24 PIEZAS	1x525 1x526 1x527 1x528 1x248 1x249 1x250 1x251 2x529 2x529B 2x240 2x241

9090X

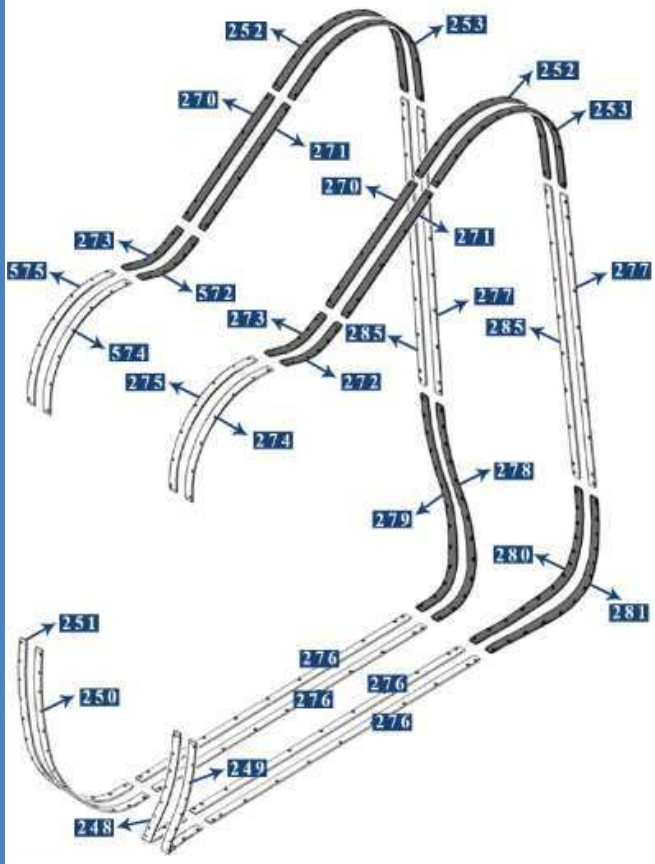

		DELANTERAS	
REF.248		Inferior dcha. Int	Comp. 944023837
REF.249		Inferior dcha. Ext	Comp. 944023838
REF.250		Inferior izqda. Int	Comp. 944023835
REF.251		Inferior izqda. Ext	Comp. 944023836
		TRASERAS	
REF.278		Inferior dcha. Int.	Comp. 944020882
REF.279		Inferior dcha. Ext.	Comp. 944020880
REF.280		Inferior izqda. Int	Comp. 944020883
REF.281		Inferior izqda. Ext	Comp. 944020881
		OTRAS	
REF.252		Curva trasera dcha	Comp. 84470244
REF.253		Curva trasera izqda	Comp. 84470245
REF.270		Sperior recta izqda	Comp. 87644834
REF.271		Superior recta dcha	Comp. 87644833
REF.272		Curva piñón izqdo	Comp. 87644822
REF.273		Curva piñón dcho	Comp. 87644823
REF.274		Curva delantera dcha	Comp. 84478586
REF.275		Curva delantera izqda	Comp. 84478585
REF.276		Recta inferior larga	Comp. 944020750
REF.285		Recta trasera larg	Comp. 944020863
REF.277		Recta trasera larga	Comp. 944020862
REF.542A		KIT 8 PIEZAS	1x248 1x249 1x250 1x251 1x278 1x279 1x280 1x281
REF.523A		KIT 16 PIEZAS	1x278 1x279 1x280 1x281 2x252 2x253 2x270 2x271 2x272 2x273
REF.542C		KIT24 PIEZAS	1x248 1x249 1x250 1x251 1x278 1x279 1x280 1x281 2x252 2x253 2x270 2x271 2x272 2x273 2x274 2x275

Todas las marcas comerciales pertenecen a sus respectivos propietarios y su uso es solo informativo.

IVA no incluido

Compruebe las Ref. antes.

WWW.EDUARDOREPUESTOSAGRICOLAS.COM

Transporte EU gratuito en pedidos 600€

NEW HOLLAND-BRAUD COMPATIBLE

EDUARDO

9040L, 9060L, 9080L, 9090L, 9040M, 9050L(*) — ACERO ANTIFRICCION

DELANTERAS/TRASERAS

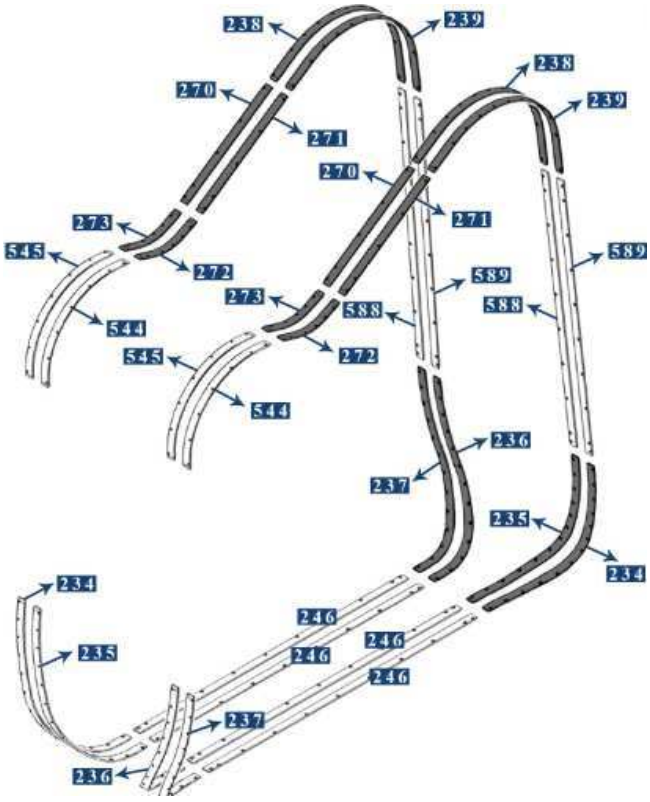

9030L/9050L/9070l/9050M

REF.234	Exterior izquierda	Comp. 944006223
REF.235	Interior izquierda	Comp. 944006222
REF.236	Interior derecha	Comp. 944006220
REF.237	Exterior derecha	Comp. 944006221
REF.238	Trasera derecha	Comp. 944013735
REF.239	Trasera izquierda	Comp. 944013736
REF.270	Sperior recta izqda	Comp. 87644834
REF.271	Superior recta dcha	Comp. 87644833
REF.272	Curva piñón izqdo	Comp. 87644822
REF.273	Curva piñón dcho	Comp. 87644823
REF.544	Curva delantera izqda	Comp. 87644825
REF.545	Curva delantera dcha	Comp. 87644824
REF.246	Recta inferior larga	Comp. 944005797
REF.588	Recta lateral dcha	Comp. 944027192
REF.589	Recta lateral izqda	Comp. 944027193
REF.541A	KIT 8 PIEZAS	2x234 2x235 2x236 2x237
REF.544A	KIT 16 PIEZAS	1x234 1x235 1x236 1x237 2x238 2x239 2x270 2x271 2x272 2x273
REF.541D	KIT 24 PIEZAS	2x234 2x235 2x236 2x237 2x238 2x239 2x270 2x271 2x272 2x273 2x544 2x545
REF.760A ★	Curva delantera derecha 9050L	Comp. 47706314
REF.760B ★	Curva delantera izquierda 9050L	Comp. 47706312

SB36 — OPCIÓN 1 — SB56, SB58, SB60, SB62, SB64

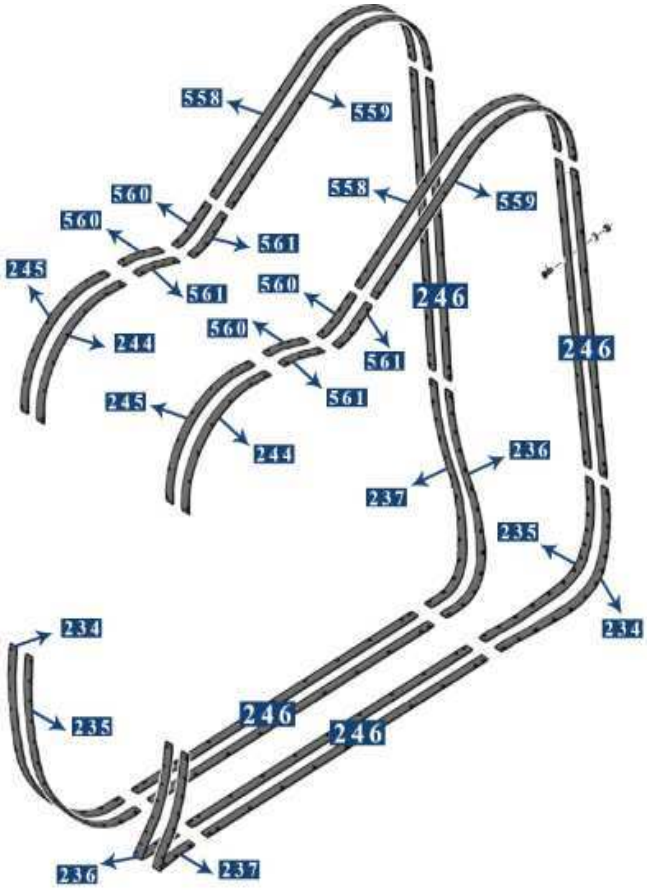

REF.234		Exterior izquierda	Comp. 944006223
REF.235		Interior izquierda	Comp. 944006222
REF.236		Interior derecha	Comp. 944006220
REF.237		Exterior derecha	Comp. 944006221
REF.558	**15**	Curva trasera dcha	Comp. 944007948
REF.559	**15**	Curva trasera izqda	Comp. 944007949
REF.560	**3**	Curva peq. dcha	Comp. 944007945
REF.561	**3**	Curva peq. Izqda	Comp. 944007944
REF.244		Delantera izquierda	Comp. 944007947
REF.245		Delantera derecha	Comp. 944007946
REF.246		Recta inferior larga	Comp. 944005797
REF.541A		KIT 8 PIEZAS	2x234 2x235 2x236 2x237
REF.522B		KIT 9965156 16 PIEZAS	1x234 1x235 1x236 1x237 2x558 2x559 4x560 4x561
REF.541E		KIT 24 PIEZAS	2x234 2x235 2x236 2x237 2x558 2x559 4x560 4x561 2x244 2x245

Todas las marcas comerciales pertenecen a sus respectivos propietarios y su uso es solo informativo.

NEW HOLLAND-BRAUD COMPATIBLE

EDUARDO

SB33, SB35, SB53, SB55 — ACERO ANTIFRICCION

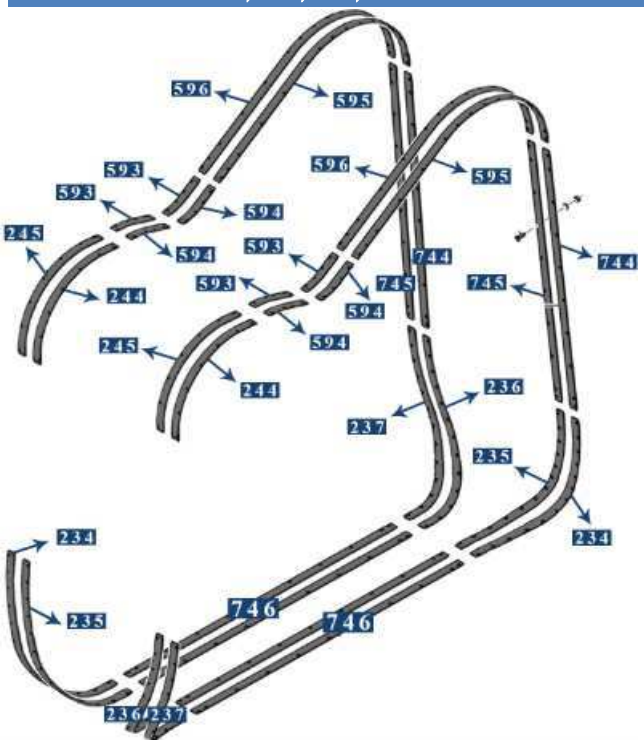

REF.234		Exterior izquierda	Comp. 944006223
REF.235		Interior izquierda	Comp. 944006222
REF.236		Interior derecha	Comp. 944006220
REF.237		Exterior derecha	Comp. 944006221
REF.596	**14**	Curva trasera dcha	Comp. 944013294
REF.595	**14**	Curva trasera izqda	Comp. 944013295
REF.594	**3**	Curva peq. dcha	Comp. 3 x Ø
REF.593	**3**	Curva peq. Izqda	Comp. 3 x Ø
REF.244		Delantera izquierda	Comp. 944007947
REF.245		Delantera derecha	Comp. 944007946
REF.744		Recta trasera larga	Comp. 944013298
REF.745		Recta lateral larga	Comp. 944013299
REF.746		Recta inferior larga	Comp. 944009291
REF.541A		KIT 8 PIEZAS	2x234 2x235 2x236 2x237
REF.522C		KIT 9964808 20 PIEZAS	2x234 2x235 2x236 2x237 2x596 2x595 4x594 4x593
REF.541F		KIT 24 PIEZAS	2x234 2x235 2x236 2x237 2x596 2x595 4x594 4x593 2x244 2x245

VX7090, VX680, SB65

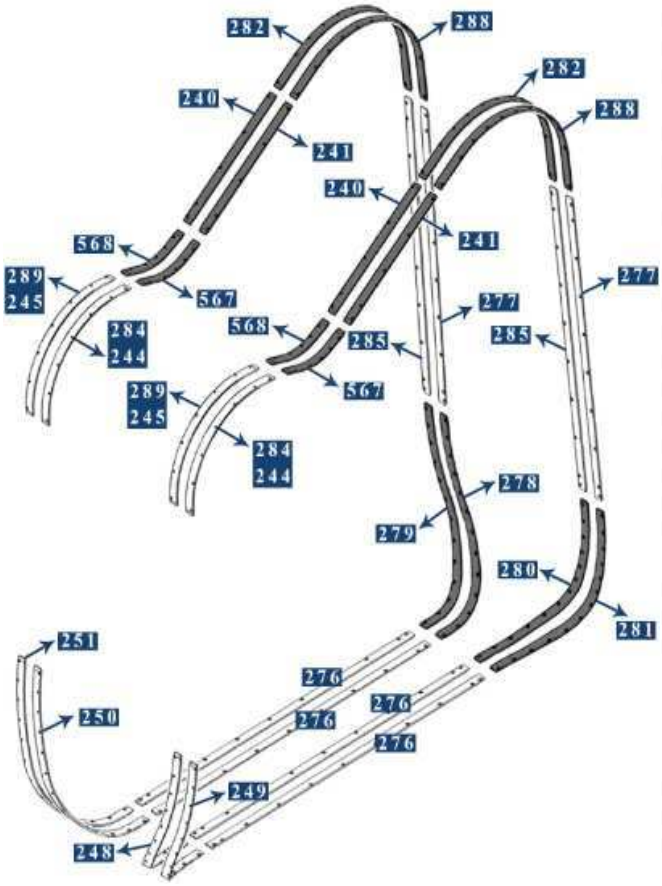

	DELANTERAS	
REF.248	Inferior dcha. Int	Comp. 944023837
REF.249	Inferior dcha. Ext	Comp. 944023838
REF.250	Inferior izqda. Int	Comp. 944023835
REF.251	Inferior izqda. Ext	Comp. 944023836
	TRASERAS	
REF.278	Inferior dcha. Int.	Comp. 944020882
REF.279	Inferior dcha. Ext.	Comp. 944020880
REF.280	Inferior izqda. Int	Comp. 944020883
REF.281	Inferior izqda. Ext	Comp. 944020881
	OTRAS	
REF.282	Curva trasera int	Comp. 944020859
REF.288	Curva trasera ext	Comp. 944024537
REF.240	Superior izquierda	Comp. 944015638
REF.241	Superior derecha	Comp. 944015639
REF.567	Curva piñón izqdo	Comp. 944015993
REF.568	Curva piñón dcho	Comp. 944015994
REF.276	Recta inferior larga	Comp. 944020750
REF.285	Recta trasera larg	Comp. 944020863
REF.277	Recta trasera larga	Comp. 944020862
REF.538B	Recta 2 agujeros	Comp. 87486371
	VX7090 / VX680	
REF.284	Curva delantera int	Comp. 944032892
REF.289	Curva delantera ext	Comp. 944032893
REF.542B	KIT 24 PIEZAS	1x248 1x249 1x250 1x251 1x278 1x279 1x280 1x281 2x282 2x288 2x240 2x241 2x567 2x568 2x284 2x289
	SB65	
REF.244	Delantera izquierda	Comp. 944007947
REF.245	Delantera derecha	Comp. 944007946
REF.542A	KIT 8 PIEZAS	1x248 1x249 1x250 1x251 1x278 1x279 1x280 1x281
REF.524	KIT 16 PIEZAS	1x278 1x279 1x280 1x281 2x282 2x288 2x240 2x241 2x567 2x568
REF.542D	KIT 24 PIEZAS	1x248 1x249 1x250 1x251 1x278 1x279 1x280 1x281 2x282 2x288 2x240 2x241 2x567 2x568 2x244 2x245

IVA no incluido
Transporte EU gratuito en pedidos 600€

Todas las marcas comerciales pertenecen a sus respectivos propietarios y su uso es solo informativo.

VL600, VL6040, VL6050, VL6060, VL6070, VL6080, VL6090, VL610, VL620, VL630, VL640, VL660 — OPCIÓN 2 — SB56, SB58, SB60, SB62, SB64

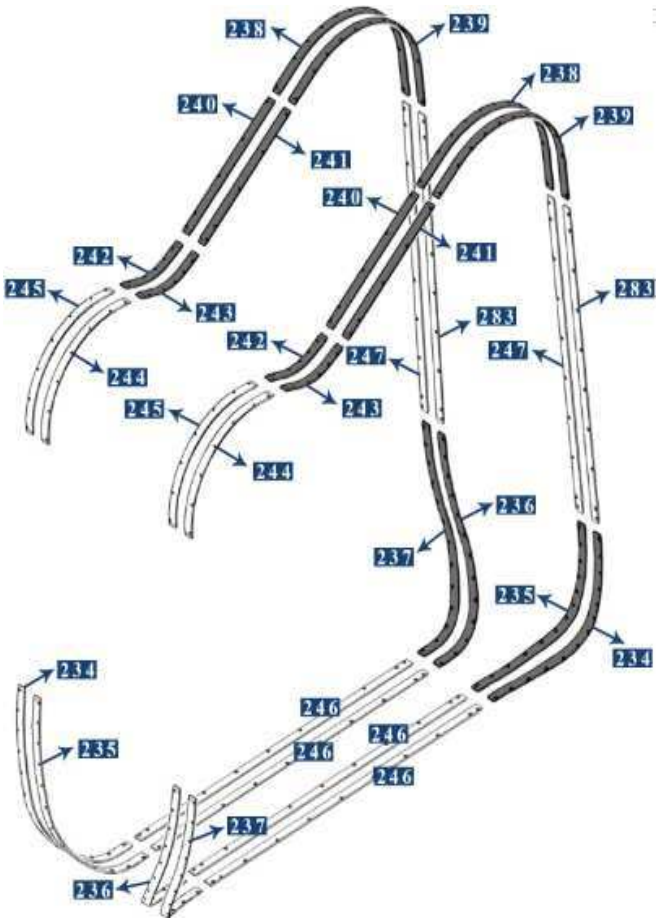

DELANTERAS/TRASERAS

REF.234	Exterior izquierda	Comp. 944006223
REF.235	Interior izquierda	Comp. 944006222
REF.236	Interior derecha	Comp. 944006220
REF.237	Exterior derecha	Comp. 944006221
REF.238	Trasera derecha	Comp. 944013735
REF.239	Trasera izquierda	Comp. 944013736
REF.240	Superior izquierda	Comp. 944015638
REF.241	Superior derecha	Comp. 944015639
REF.242	Curva piñón izqdo	Comp. 944022396
REF.243	Curva piñón dcho	Comp. 944022397
REF.244	Delantera izquierda	Comp. 944007947
REF.245	Delantera derecha	Comp. 944007946
REF.246	Recta inferior larga	Comp. 944005797
REF.247	Recta lateral larga	Comp. 944015929
REF.283	Recta lateral larga	Comp. 944015930
REF.541A	KIT 8 PIEZAS	2x234 2x235 2x236 2x237
REF.522A	KIT 16 PIEZAS	1x234 1x235 1x236 1x237 2x238 2x239 2x240 2x241 2X242 2X243
REF.541B	KIT 24 PIEZAS	2x234 2x235 2x236 2x237 2x238 2x239 2x240 2x241 2x242 2x243 2x244 2x245

VL5060, VL5080, VL5090, VL530, VL540, VL550, VL570

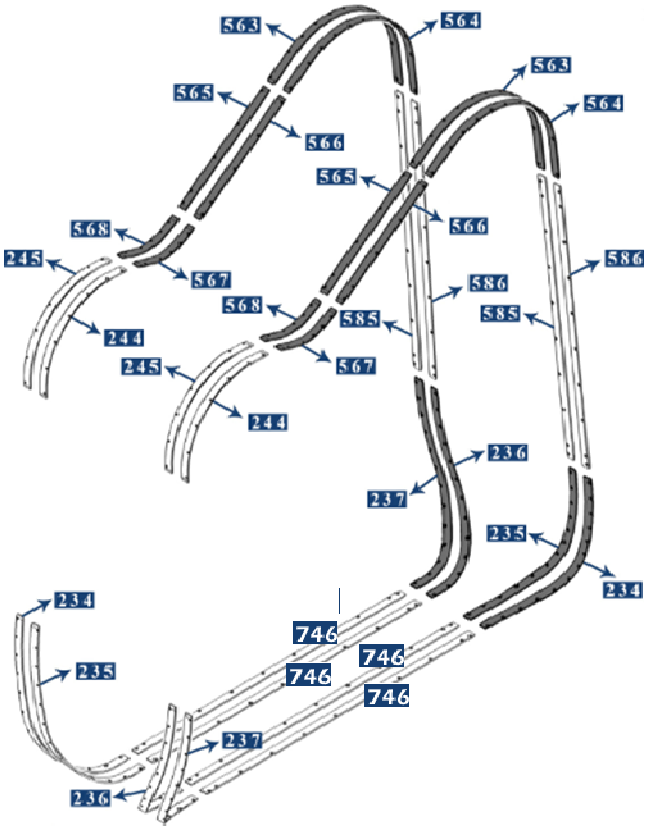

DELANTERAS/TRASERAS

REF.234	Exterior izquierda	Comp. 944006223
REF.235	Interior izquierda	Comp. 944006222
REF.236	Interior derecha	Comp. 944006220
REF.237	Exterior derecha	Comp. 944006221
REF.563	Curva trasera dcha	Comp. 944015982
REF.564	Curva trasera izqda	Comp. 944015983
REF.565	Superior recta dcha	Comp. 944015712
REF.566	Superior recta izqda	Comp. 944015713
REF.567	Curva piñón izqdo	Comp. 944015993
REF.568	Curva piñón dcho	Comp. 944015994
REF.244	Delantera izquierda	Comp. 944007947
REF.245	Delantera derecha	Comp. 944007946
REF.746	Recta inferior larga	Comp. 944009291
REF.585	Recta lateral larga	Comp. 944015616
REF.586	Recta lateral larga	Comp. 944015617
REF.541A	KIT 8 PIEZAS	2x234 2x235 2x236 2x237
REF.569	KIT 16 PIEZAS	1x234 1x235 1x236 1x237 2x563 2x564 2x565 2x566 2x567 2x568
REF.541C	KIT 24 PIEZAS	2x234 2x235 2x236 2x237 2x563 2x564 2x567 2x568 2x244 2x245

IVA no incluido
Transporte EU gratuito en pedidos 600€
Todas las marcas comerciales pertenecen a sus respectivos propietarios y su uso es solo informativo.
WWW.EDUARDOREPUESTOSAGRICOLAS.COM
Compruebe las Ref. antes.

9090X OLIVE, 10.90X — ACERO ANTIFRICCION

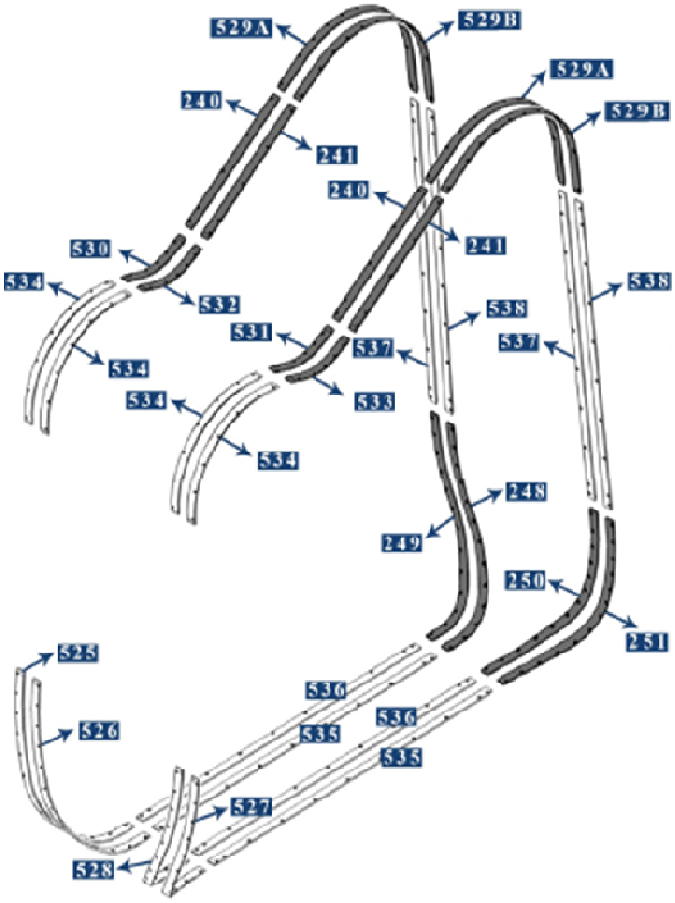

	DELANTERAS	
REF.525	Inferior izq. Ext	Comp. 87486375
REF.526	Inferior izq. Int.	Comp. 87486377
REF.527	Inferior dcha. Ext.	Comp. 87486376
REF.528	Inferior dcha. Int.	Comp. 87486378
	TRASERAS	
REF.248	Inferior dcha. Int	Comp. 944023837
REF.249	Inferior dcha. Ext	Comp. 944023838
REF.250	Inferior izqda. Int	Comp. 944023835
REF.251	Inferior izqda. Ext	Comp. 944023836
	OTRAS	
REF.529A	Curva trasera	Comp. 944020859
REF.529B	Curva trasera	Comp. 944024537
REF.240	Superior izquierda	Comp. 944015638
REF.241	Superior derecha	Comp. 944015639
REF.530	Curva piñón izqdo.	Comp. 84391127
REF.531	Curva piñón izqdo	Comp. 84391129
REF.532	Curva piñón dercho	Comp. 84391128
REF.533	Vurva piñón derecho	Comp. 84391130
REF.534	Curva delantera	Comp. 84391069
REF.535	Recta inferior larga	Comp. 87486373
REF.536	Recta inferior larga	Comp. 87486374
REF.537	Recta lateral larga	Comp. 944020862
REF.538	Recta lateral larga	Comp. 944020863
REF.538B	Recta 2 agujeros	Comp. 87486371
REF.539	KIT 16 PIEZAS	
	1x248 1x249 1x250 1x251 2x529A 2x529B 2x240 2x241 1x530 1x531 1x532 1x533	
REF.543A	KIT 8 PIEZAS	
	1x525 1x526 1x527 1x528 1x248 1x249 1x250 1x251	
REF.543C	KIT24 PIEZAS	
	1x525 1x526 1x527 1x528 1x248 1x249 1x250 1x251 2x529A 2x529B 2x240 2x241 1x530 1x531 1x532 1x533 4x534	

FILTROS — 9070L, 9050L, 9090X-T4, 9090X-T5, 9090LH-T4, 10.90X, 11.90X

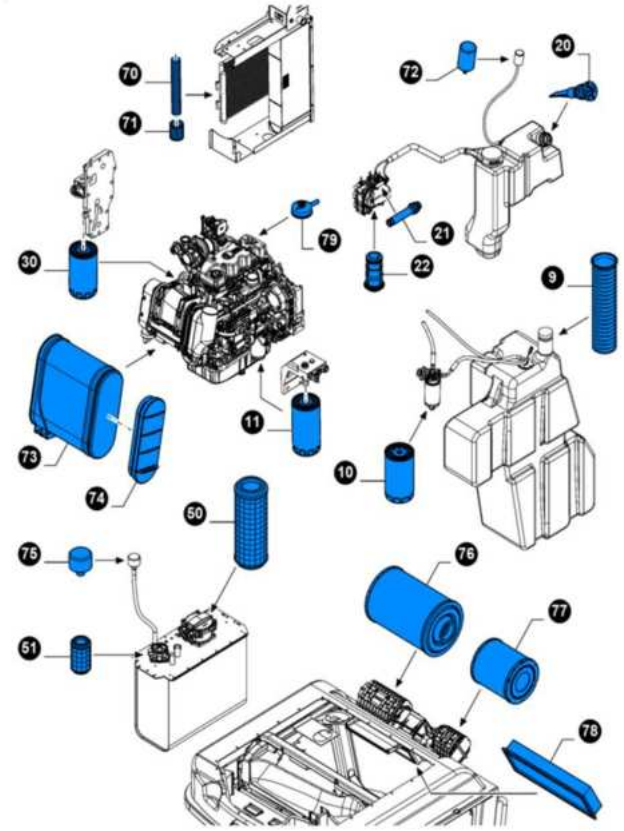

	COMBUSTIBLE	
REF.758A	9 (9) FILTRO GASOIL	Comp. 47385140
REF.758B	10 (10) FILTRO GASOIL	Comp. 84337371,90412128
REF.758C	11 (11) FILTRO GASOIL	Comp. 73332236, 504292579
	ACEITE	
REF.516C	30 (30) FITLRO MOTOR	Comp. 84228488
	HIDRÁULICO	
REF.599A	50 (50) F.HIDRÁULICO	Comp. 9964918
REF.758D	51 (51) FITLRO HIDRÁULICO	Comp. 47668095
REF.597I	75 (77) F. RESPIRADERO	Comp. 920018819
	AIRE	
REF.758E	70 (70) SECADOR DE RECEPTOR	Comp. 47465072
REF.758F	71 (71) 47465067 COLADOR	Comp. 47465067
	CABINA	
REF.758G	72 (72) RESPIRADERO	Comp. 47437399
REF.759H	73 (73) FILTRO AIRE	Comp. 87720898
REF.759J	74 (74) FILTRO AIRE	Comp. 87720899
REF.759K	76 (76) FILTRO CABINA	Comp. 84604011, 91741833
REF.759L	77 (77) FILTRO CABINA	Comp. 84604009
REF.759M	78 (78) FILTRO CABINA	Comp. 87726699

IVA no incluido
Transporte EU gratuito en pedidos 600€

Todas las marcas comerciales pertenecen a sus respectivos propietarios y su uso es solo informativo.

FILTROS — VL (VL600, VL6040, VL6050, VL6060, VL6070, VL6080, VL6090, VL610, VL620, VL630, VL640, VL660)

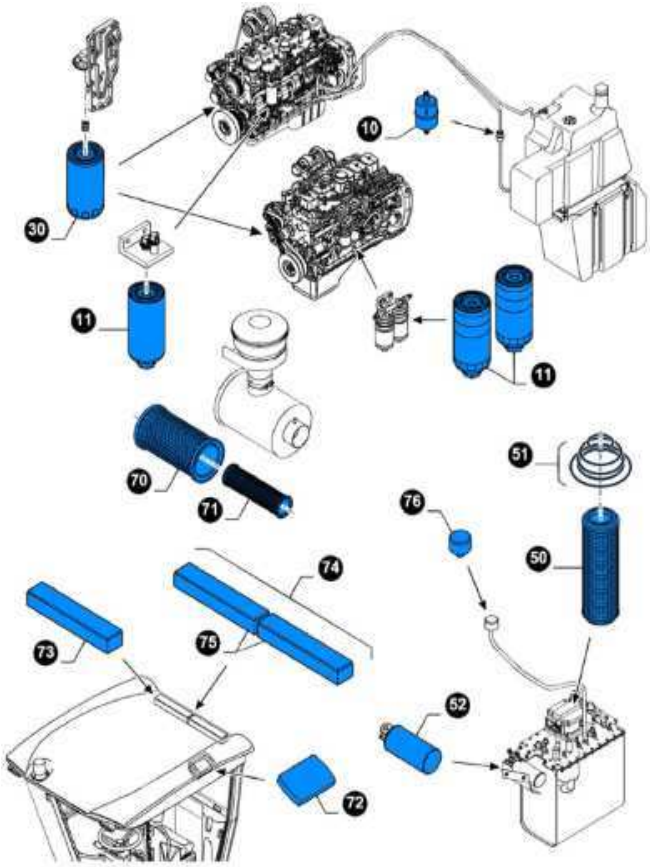

COMBUSTIBLE

REF.515A	10	(10) PRE-FILTRO GASOIL	Comp. 87400394, D139225
REF.515B	11	(11) F.GASOIL	Comp. 2852693, 87803192
REF.515C	11	(11) F.GASOIL	Comp. 1902138
REF.515D	11	(11) F.GASOIL	Comp. 84209753, 84526251

ACEITE

REF.516A	30	(30) F.MOTOR	Comp. 2852526, 87803260
REF.516B	30	(30) F.MOTOR	Comp. 4897898, 84228488

HIDRÁULICO

REF.599A	50	(50) F.HIDRÁULICO	Comp. 9964918
REF.722A	51	(51) ANILLO DE CIERRE	Comp. 87547082
REF.599C	52	(52) F. HIDRÁUL. RETORNO	Comp. 9964728

AIRE

REF.597B	70	(70) F.AIRE	Comp. 9965158, 1930785
REF.597D	71	(71) F.AIRE	Comp. 9965159, 87682972

CABINA

REF.597T	72	(72) F. CABINA	Comp. 84607214
REF.597M	73	(73) F.AIRE	Comp. 944028550
REF.597E	74	(74) KIT F. CABINA 2ud	Comp. 713008035
REF.597F	75	(75) F. CABINA CARBONO	Comp. 944032451
REF.597G	76	(76) F.RESPIRADERO	Comp. 920018819

FILTROS — (70,71) 9030L, 9040L — (72,73) 9060L, 9080L, 9090L, 9090X, 9090X OLIVE

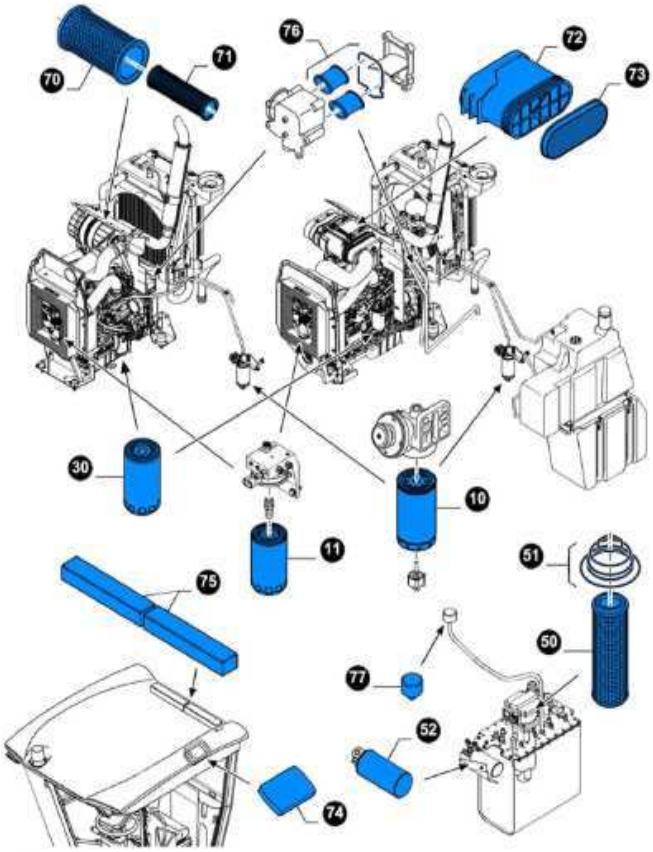

COMBUSTIBLE

REF.515R	10	PRE-FILTRO	Comp. 87533313, 87592170
REF.515S		(10) PRE-FILTRO	Comp. 84337371, 84348882
REF.515T	11	(11) F.GASOIL	Comp. 4897897, 73332236

ACEITE

REF.516C	30	(30) FITLRO MOTOR	Comp. 84228488

HIDRÁULICO

REF.599A	50	(50) F.HIDRÁULICO	Comp. 9964918
REF.722A	51	(51) ANILLO DE CIERRE	Comp. 87547082
REF.599C	52	(52) F. HIDRÁUL. RETORNO	Comp. 9964728

AIRE

REF.597P	70	(70) F.AIRE	Comp. 87704244
REF.597Q	71	(71) F.AIRE	Comp. 87682992
REF.597R	72	(72) F.AIRE	Comp. 87687267
REF.597S	73	(73) F.AIRE	Comp. 87687268, 87720899

CABINA

REF.597T	74	(72) F. CABINA	Comp. 84607214
REF.597M	75	(73) F.AIRE	Comp. 944028550
REF.597E	75	(74) KIT F. CABINA 2ud	Comp. 713008035
REF.597U	76	(76) FILTRO	Comp. 2992447
REF.597I	77	(77) F. RESPIRADERO	Comp. 920018819

FILTROS SB (SB56, SB58, SB60, SB64, SB65)

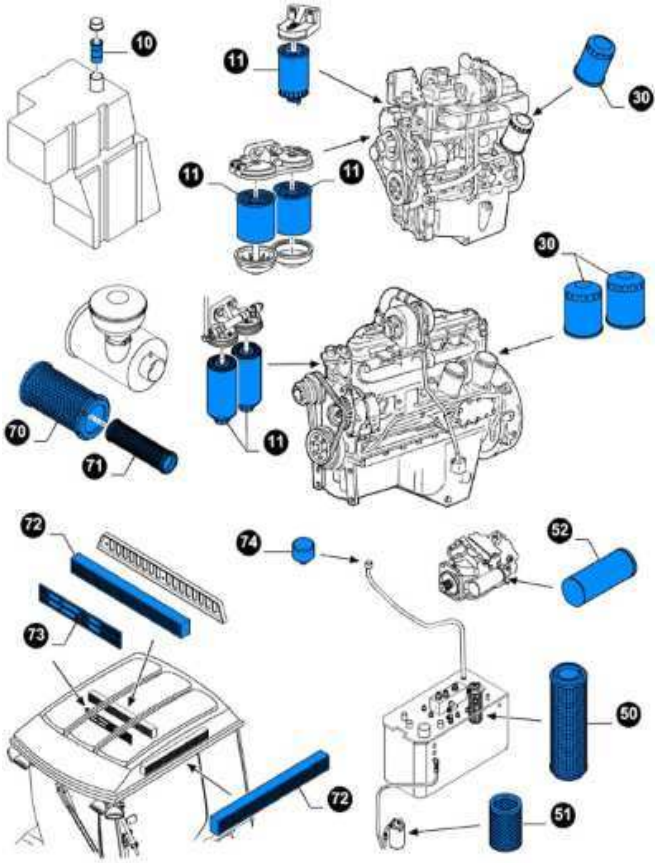

		COMBUSTIBLE	
REF.724A	10	(10) ELEMENTO	Comp. 944010988=47385140
REF.515H	11	(11) F.GASOIL	Comp. 1930010, 471357706, 842214564
REF.515J	11	(11) F.GASOIL	Comp. 1909100
REF.516E	30	(30) F.MOTOR	Comp. 1931047
		ACEITE	
REF.516D	30	(30) F.MOTOR	Comp. 1909102, 84221215
REF.516F	30	(30) F.MOTOR	Comp. 87803260, 84228488
		HIDRÁULICO	
REF.599B	50	(50) F.HIDRÁUL	Comp. 920018520
REF.599C	51	(52) F. HIDRÁUL. RETORNO	Comp. 9964728
REF.599D	52	(52)F.HIDRÁUL	Comp. 920018543
REF.599E	52	(52) F.HIDRÁUL	Comp. 920019190
		AIRE	
REF.597B	70	(70) F.AIRE	Comp. 9965158, 1930785
REF.597A	70	(70) F.AIRE	Comp. 1930784, 87682973
REF.723A	71	(71) F.AIRE	Comp. 1909964
REF.597C	71	(71) F.AIRE	Comp. 1930790
REF.597D	71	(71) F.AIRE	Comp. 9965159, 87682972
		CABINA	
REF.597J	72	(72) F.CABINA	Comp. 321750750, 47405000
REF.597K	72	(72) F.CABINA CARBONO	Comp. 920018705
REF.597L	73	(73) F.CABINA	Comp. 9966191
REF.599H	74	(74) F.RESPIRADERO	Comp. 700055604, 84078520
REF.597G	74	(76) F.RESPIRADERO	Comp. 920018819

FILTROS VX680

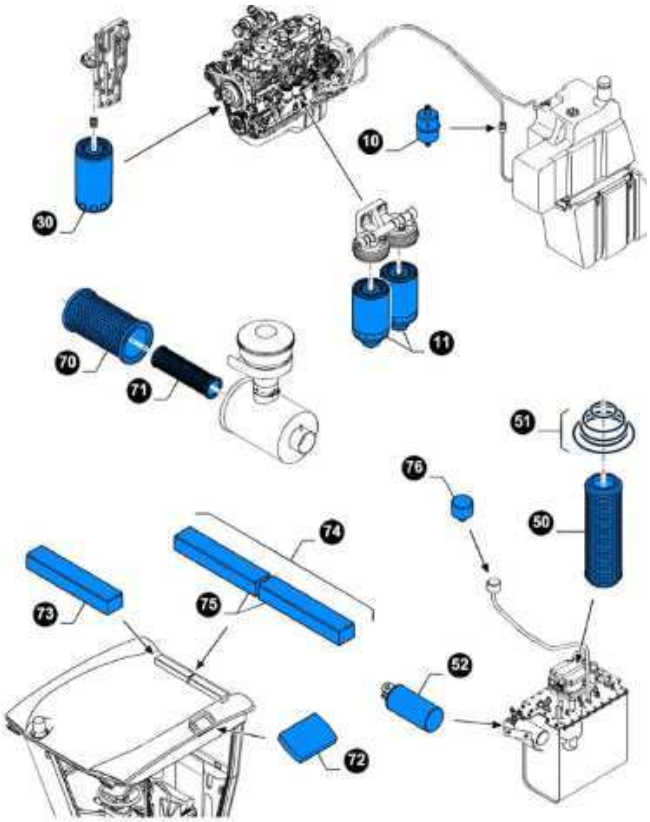

		COMBUSTIBLE	
REF.515A	10	(10) PRE-FILTRO GASOIL	Comp. 87400394, D139225
REF.515K	11	(11) F.GASOIL	Comp. 1902138
		ACEITE	
REF.516G	30	(30) F.MOTOR	Comp. 2852138, 87803260, 84228488
		HIDRÁULICO	
REF.599A	50	(50) F.HIDRÁULICO	Comp. 9964918
REF.722A	51	(51) ANILLO DE CIERRE	Comp. 87547082
REF.599C	52	(52) F. HIDRÁUL. RETORNO	Comp. 9964728
		AIRE	
REF.597B	70	*(70) F.AIRE*	*Comp. 9965158, 1930785*
REF.597D	71	*(71) F.AIRE*	*Comp. 9965159, 87682972*
		CABINA	
REF.597T	72	(72) F. CABINA	Comp. 84607214
REF.597M	73	(73) F.AIRE	Comp. 944028550
REF.597E	74	(74) KIT F. CABINA 2ud	Comp. 713008035
REF.597F	75	(75) F. CABINA CARBONO	Comp. 944032451
REF.597G	76	(76) F.RESPIRADERO	Comp. 920018819

Compruebe las Ref. antes.

Todas las marcas comerciales pertenecen a sus respectivos propietarios y su uso es solo informativo.

WWW.EDUARDOREPUESTOSAGRICOLAS.COM

IVA no incluido

Transporte EU gratuito en pedidos 600€

FILTROS VX7090

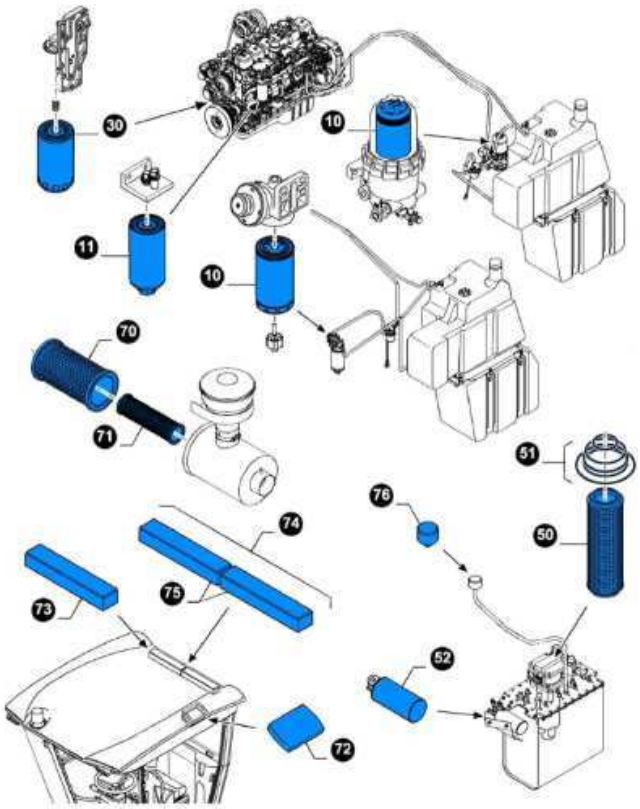

COMBUSTIBLE

REF.515L	**10**	(10) PRE-FILTRO GASOIL	Comp. 87519301, 87592171
REF.515M	**10**	(10) PRE-FILTRO GASOIL	Comp. 84283691
REF.515N	**11**	(11) F.GASOIL	Comp. 2852693
REF.515P	**11**	(11) F.GASOIL	Comp. 2830348
REF.515Q	**11**	(11) F.GASOIL	Comp. 84209753, 84526251

ACEITE

REF.516J	**30**	(30) F.MOTOR	Comp. 2852526
REF.516B	**30**	(30) F.MOTOR	Comp. 4897898, 84228488

HIDRÁULICO

REF.599A	**50**	(50) F.HIDRÁULICO	Comp. 9964918
REF.722A	**51**	(51) ANILLO DE CIERRE	Comp. 87547082
REF.599C	**52**	(52) F. HIDRÁUL. RETORNO	Comp. 9964728

AIRE

REF.597B	**70**	*(70) F.AIRE*	*Comp. 9965158, 1930785*
REF.597D	**71**	*(71) F.AIRE*	*Comp. 9965159, 87682972*

CABINA

REF.597T	**72**	(72) F. CABINA	Comp. 84607214
REF.597M	**73**	(73) F.AIRE	Comp. 944028550
REF.597E	**74**	(74) KIT F. CABINA 2ud	Comp. 713008035
REF.597F	**75**	(75) F. CABINA CARBONO	Comp. 944032451
REF.597G	**76**	(76) F.RESPIRADERO	Comp. 920018819

FILTROS VX7090 OLIVES

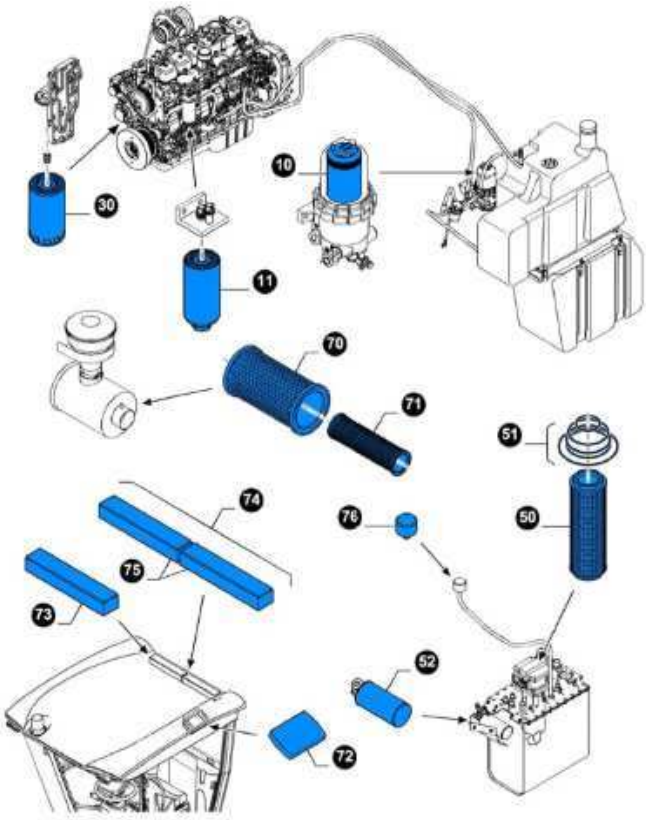

COMBUSTIBLE

REF.515M	**10**	*(10) PRE-FILTRO GASOIL*	*Comp. 84283691*
REF.515Q	**11**	(11) F.GASOIL	Comp. 84209753, 84526251

ACEITE

REF.516B	**30**	(30) F.MOTOR	Comp. 4897898, 84228488

HIDRÁULICO

REF.599A	**50**	(50) F.HIDRÁULICO	Comp. 9964918
REF.722A	**51**	(51) ANILLO DE CIERRE	Comp. 87547082
REF.599C	**52**	(52) F. HIDRÁUL. RETORNO	Comp. 9964728

AIRE

REF.597B	**70**	*(70) F.AIRE*	*Comp. 9965158, 1930785*
REF.597D	**71**	*(71) F.AIRE*	*Comp. 9965159, 87682972*
REF.597T	**74**	(72) F. CABINA	Comp. 84607214
REF.597M	**73**	(73) F.AIRE	Comp. 944028550
REF.597E	**74**	(74) KIT F. CABINA 2ud	Comp. 713008035
REF.597F	**75**	(75) F. CABINA CARBONO	Comp. 944032451
REF.597G	**76**	(76) F.RESPIRADERO	Comp. 920018819

Todas las marcas comerciales pertenecen a sus respectivos propietarios y su uso es solo informativo.

NEW HOLLAND-BRAUD COMPATIBLE

EDUARDO

FABRICACIÓN DE DEFLECTORES TRASEROS NUEVOS (transporte no incluido)

1- KIT(2p)

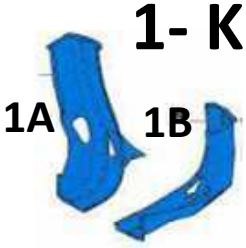

2 -KIT (6p)

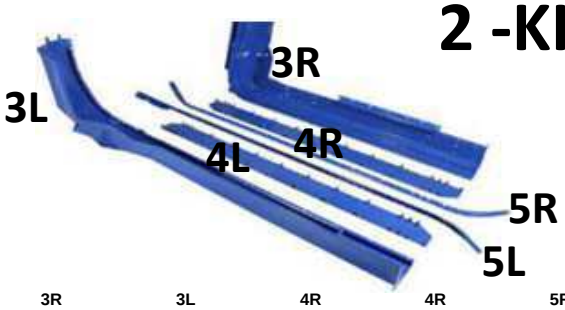

	1 KIT (2p)	1A	1B	2 KIT (6p)	3R	3L	4R	4R	5R	5L
SB53 SB55	REF.703A Comp. 9965152			REF.703BB Comp. 84589810			REF.701F Comp. 944009296	REF.701F Comp. 944009296	REF.701E Comp. 944009292	REF.702D Comp. 944009293
VL600,VL610 VL620,VL640 VL660	REF.706A Comp. 84126212			REF.706B Comp. 47384999			REF.701D Comp. 944005585	REF.701D Comp. 944005585	REF.701C Comp. 944011412	REF.702C Comp. 944011411
7030L	REF.703D Comp. 47857227			REF.702H Comp. 51501337			REF.702J Comp. 51458614	REF.702J Comp. 51458614	REF.702K Comp. 51458607	REF.702L Comp. 51458608
9040L 9060L 9080L	REF.703D Comp. 47857227			REF.705E Comp. 48061238			REF.701D Comp. 944005585	REF.701D Comp. 944005585	REF.701C Comp. 944011412	REF.702C Comp. 944011411
SB56, SB58 SB60,SB62 SB64	REF.703A Comp. 9965152			REF.703B Comp. 84354860			REF.701D Comp. 944005585	REF.701D Comp. 944005585	REF.701C Comp. 944011412	REF.702C Comp. 944011411
VL6040,6050 VL6060,6070 VL6080,6090	REF.706A Comp. 84126212			REF.706B Comp. 47384999			REF.701D Comp. 944005585	REF.701D Comp. 944005585	REF.701C Comp. 944011412	REF.702C Comp. 944011411
7030M	REF.702E Comp. 944032671			REF.702G Comp. 47853093			REF.701F Comp. 944009296	REF.701F Comp. 944009296	REF.701E Comp. 944009292	REF.702D Comp. 944009293
9040M	REF.702M Comp. 84589774			REF.705E Comp. 48061238			REF.701D Comp. 944005585	REF.701D Comp. 944005585	REF.701C Comp. 944011412	REF.702C Comp. 944011411
VL530,VL540 VL540,VL550 VL570,VL5060 VL5080,VL5090	REF.703A Comp. 9965152				REF.701G Comp. 944032672	REF.702E Comp. 944032671	REF.701F Comp. 944009296	REF.701F Comp. 944009296	REF.701E Comp. 944009292	REF.702D Comp. 944009293
SB65 VX7090 VX680	REF.709A Comp. 87629911				REF.707B Comp. 944033616	REF.708B Comp. 944033603	REF.707D Comp. 944020654	REF.707D Comp. 944020654	REF.707C Comp. 944020671	REF.708C Comp. 944020670
9090X OLIVE	REF.709D Comp. 47523030				REF.707H Comp. 87683713	REF.708G Comp. 87683714	REF.707K Comp. 87486388	REF.707L Comp. 87486379	REF.707J Comp. 87486382	REF.708H Comp. 87486381
9090X		REF.708J Comp. 84470410	REF.708K Comp. 84470411		REF.707N Comp. 84470376	REF.708D Comp. 84470377	REF.707F Comp. 944020654	REF.707F Comp. 944020654	REF.707E Comp. 84479820	REF.708E Comp. 84479821

★	1 KIT (2p)	N2	N1	N6	N6	N3	N3	N5	N8	N4	N7
9030L, 9050L 9070L 9090LHT4	REF.703D Comp. 47857227	REF.703E Comp. 87648911	REF.703F Comp. 87648899	REF.701D Comp. 944005585	REF.701D Comp. 944005585	REF.703G Comp. 48106280	REF.703G Comp. 48106280	REF.703H Comp. 47710693	REF.703J Comp. 48106271	REF.703K Comp. 47710692	REF.703L Comp. 48106266
10.90X ★	REF.709D Comp. 47523030	REF.707H Comp. 87683713	REF.708G Comp. 87683714	REF.707K Comp. 87486388	REF.707K Comp. 87486388	REF.704E Comp. 48059576	REF.704E Comp. 48059576	REF.704F Comp. 51408992	REF.704G Comp. 51409006	REF.704H Comp. 48059631	REF.704K Comp. 48059590

1- KIT(2p)

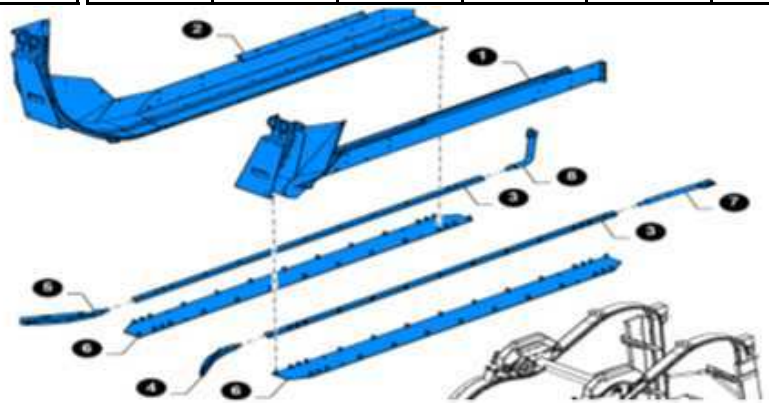

IVA no incluido

Transporte EU gratuito en pedido.

Todas las marcas comerciales pertenecen a sus respectivos propietarios y su uso es solo informativo.

WWW.EDUARDOREPUESTOSAGRICOLAS.COM

GRASAS ESPECIALES VENDIMIADORAS

GRASAS DE LITIO

PARA ENGRASE MANUAL - FLUIDEZ NIVEL "2" (ESPESA)

REF.401D LITKEN EP2 (con aditivos EP) (lata 5kg)

REF.401E LITKEN EP2 (con aditivos EP) Cartucho 420m.l.

PARA ENGRASE AUTOMÁTICO - FLUIDEZ NIVEL "00" (LÍQUIDA)

REF.401F LITKEN EP00 (con aditivos EP) (lata 5kg)

GRASA ALIMENTARIA

PARA ENGRASE MANUAL - FLUIDEZ NIVEL "2" (ESPESA)

REF.407B ULTRAPLEX FG2 (lata 5kg)

REF.403D ULTRAPLEX FG2 Cartucho 420m.l

PARA ENGRASE AUTOMÁTICO - FLUIDEZ NIVEL "00" (LÍQUIDA)

REF.407E ULTRAPLEX FG00 (lata 5kg)

REF.514B ANTICONGELANTE AMBRA AGRIFULL OT PREMIX (>2010) 5L
AGRIFULL OT PREMIX 5 l
<2010 Comp. 77411MH2EU

ACEITES

REF.512A ACEITE MOTOR AMBRA MASTERGOLD HSP 5L
MASTERGOLD HSP 5 l
<2018 Comp74514MH2EU
HSP SAE 15W - 40NH 330 HSP

REF.512B ACEITE MOTOR AMBRA MASTERGOLD HSP 20L
MASTERGOLD HSP 20 l
<2018 Comp 74514RH1EU
HSP SAE 15W - 40NH 330 HSP

REF.512C ACEITE MOTOR UNITEK 10W-40 5L
MASTERGOLD HSP 20 l
>2018 Comp 7466MH2EU
HSP SAE 10W - 40NH 330 HSP

REF.512D ACEITE MOTOR UNITEK 10W-40 20L
MASTERGOLD HSP 20 l
>2018 Comp 74664RH1EU
HSP SAE 10W - 40NH 330 HSP

REF.513A ACEITE HIDRÁULICO AMBRA HYDROSYSTEM 68 20L

REF.513H ACEITE HIDRÁULICO AMBRA HYDROSYSTEM 68 5L

REF.514A ANTICONGELANTE AMBRA AGRIFLU MIX 5L
AGRIFLU MIX 5 l
<2010 Comp 77413MH2EU

Todas las marcas comerciales pertenecen a sus respectivos propietarios y su uso es solo informativo.

Compruebe las Ref. antes.

WWW.EDUARDOREPUESTOSAGRICOLAS.COM

IVA no incluido

Transporte EU gratuito en pedidos 600€

GREGOIRE COMPATIBLE

EDUARDO

REF.106D

SACUDIDOR MEDIO 1.125 mm. diám.25 /35 AMARILLO

Comp. 265675

GMM, G60, G60I, G70, G70A, G71, G80, G85, G86, G90, G103, G104, G105, G106, G107, G110, G114, G115, G116, G117, G135 V, G2.220, G2.230, G4.220, G6.200, G6.210, G7.210, G7.220

REF.106E

SACUDIDOR MEDIO 1.125 mm. diám.25 /35 NEGRO

Comp. 265785

G MM, G 60, G 60 I, G 70, G 70 A, G 71, G80, G 85, G 86, G 90, G 103, G 104, G 105, G 106, G 107, G 110, G 114, G 115, G 116, G 117, G 135 V, G2.220, G2.230, G4.220, G6.200, G6.210, G7.210, G7.220,

REF.106F

SACUDIDOR CORTO 1.169 mm. diám.25 /35 AMARILLO

Comp. 265739

G3.230, G3.230,G3.250

REF.106G

SACUDIDOR CORTO 1.169 mm. diám.25 /35 NEGRO

Comp. 265796

G3.230, G3.230,G3.250

REF.107D

SACUDIDOR LARGO 1330 mm. diám.25 /35 AMARILLO

Comp. 265617

G120, G122, G125, G130, G132, G132BC, G151, G152, G152BC, G152I, G160, G170, G7.240, G8.260, G8.270

REF.107E

SACUDIDOR LARGO 1330 mm. diám.25 /35 NEGRO

Comp. 265789

G120, G121, G122, G125, G130, G132, G132BC, G151, G152, G152BC, G152I, G160, G170, G7.240, G8.260, G8.270

REF.108F

SACUDIDOR CORTO diám.25 /35 AMARILLO (859x871)

Comp. 265682

G50, G50A, G55H, G55I, G55VH, G56 I, G.Prima, G1.190, G1.200,

REF.108G

SACUDIDOR CORTO diám.25 /35 NEGRO (859x871)

Comp. 265792

G 50, G 50 A, G 55 H, G 55 I, G 55 VH, G 56 I, G.Prima, G1.190, G1.200,

REF.113D

SACUDIDOR OLIVO AMARILLO diám.28/40 1.325 mm

Comp. 265510

G65 ,G66, G120SW, G140SW(D28), G167, G240, G9.320, G9.330,G 91, GX9(<2022), G10.330, G9.330 OLIVES

REF.113H

SACUDIDOR OLIVO NEGRO diám28/40 1.325mm

Comp. 265794

G65, G66, G140SW(D28),G167, G240,G9.320, G9.330, GX9 (<2022)

REF.155A

PLACA AJUSTE INOX. FIJACIÓN ESCAMAS

Comp. -

GMM, G60, G60I, G70, G70A, G71, G80, G85, G86, G90, G103, G104, G105, G106, G107, G110, G114, G115, G116, G117, G135V, G2.220, G2.230, G4.220, G6.200, G6.210, G7.210, G7.220, G 120, G 121, G 122, G 125, G 130, G 132, G 132 BC, G 151, G 152, G 152 BC, G 152 I, G 160, G 170, G7.240, G8.260, G8.270, G 50, G 50 A,

REF.148A

PROTECTOR DE GOMA 40X28XM10 SOPORTE SIN FIN

Comp. -

REF.118C

SEMIBRIDA ALUMINIO MACHO/HEMBRA DIAM 35 KIT 2 tornillos, 2 tuercas y 2 arandelas Ø25

Comp. 203058

GMM, G60, G60I, G70, G70A, G71, G80, G85, G86, G90, G103, G104, G105, G106, G107, G110, G114, G115, G116, G117, G135V, G2.220, G2.230, G4.220, G6.200, G6.210, G7.210, G7.220, G120, G121, G122, G125, G130, G132, G132 BC, G151, G152, G152BC, G152I, G160, G170, G7.240, G8.260, G8.270, G50, G50A, G55H, G55I, G55VH, G56I, G.Prima, G1.190, G1.200

REF.108E

SACUDIDOR ARCO PMM D25 AMARILLO

Comp. 265020

G50, G50A, G55H, G55I, G55VH, G56I, G.Prima, G1.190, G1.200,

REF.119A

SOPORTE DE BARRA DELANTERA R.H. (D25)

Comp. 120462

GMM, G60, G60I, G70, G70A, G71, G80, G85, G86, G90, G103, G104, G105, G106, G107, G110, G114, G115, G116, G117, G135V, G2.220, G2.230, G4.220, G6.200, G6.210, G7.210, G7.220, G120, G121, G122, G125, G130, G132, G132 BC, G151, G152, G152BC, G152I, G160, G170, G7.240, G8.260, G8.270, G50, G50A, G55H, G55I, G55VH, G56I, G.Prima, G1.190, G1.200

REF.120A

SOPORTE DE BARRA DELANTERA L.H. (D25)

Comp. 120463

G MM, G 60, G 60 I, G 70, G 70 A, G 71, G80, G 85, G 86, G 90, G 103, G 104, G 105, G 106, G 107, G 110, G 114, G 115, G 116, G 117, G 135 V, G2.220, G2.230, G4.220, G6.200, G6.210, G7.210, G7.220, G 120, G 121, G 122, G 125, G 130, G 132, G 132 BC, G 151, G 152, G 152 BC, G 152 I, G 160, G 170, G7.240, G8.260, G8.270, G 50, G 50 A, G 55 H, G 55 I, G 55 VH, G 56 I, G.Prima, G1.190, G1.200,

REF.171A

EJE EXTRACTORES SARMIENTOS

Comp. -

G 103, G 104, G 105, G 106, G 107, G 108, G 10X, G 114, G 115, G 117, G 120 SD, G 120SW, G 121, G 122, G 125, G 130, G 132, G 133V, G 135 V, G 13X, G 140SW, G 152, G 167, G 170, G 175V, G 6.200, G 6.210, G 60, G 7.220, G 7.240, G 70, G 71, G 8.260, G 8.270, G 84, G 86, G 9.320, G 90

REF.123A

SUJECION DE BARRA DELANTERA28MM DERECHO

Comp. 121461

G65, G66, G120SW, G140SW, G167, G240, G9.320, G9.330, G9.330 Olive, G10.330

REF.124A

SUJECION DE BARRA DELANTERA 28 IZQUIERDA

Comp. 121462

G65, G66, G120SW, G140SW, G167, G240, G9.320, G9.330, G9.330 Olive, G10.330

REF.109A

RASCADOR POLEA 70X30X8,2mm

Comp. 265005

G103, G104, G105, G106, G107, G108, G10X, G114, G 115, G117, G120SD, G120SW, G121, G122, G125, G130, G132, G133V, G135V, G13X, G140SW, G152, G167, G170, G175V, G6.200, G6.210, G60, G7.220, G7.240, G70, G71, G8.260, G8.270, G84, G86, G9.320, G90

Compruebe las Ref. antes.

Todas las marcas comerciales pertenecen a sus respectivos propietarios y su uso es solo informativo.

WWW.EDUARDOREPUESTOSAGRICOLAS.COM

IVA no incluido

Transporte EU gratuito en pedidos 600€

GREGOIRE COMPATIBLE

EDUARDO

REF.101D

ESCAMA CON CODO DERECHA (417x224)

Comp. 155083

G MM, G 60, G 60 I, G 70, G 70 A, G 71, G80, G 85, G 86, G 90, G 103, G 104, G 105, G 106, G 107, G 110, G 114, G 115, G 116, G 117, G 135 V, G2.220, G2.230, G4.220, G6.200, G6.210, G7.210, G7.220, G 120, G 121, G 122, G 125, G 130, G 132, G 132 BC, G 151, G 152, G 152 BC, G 152 I, G 160, G 170, G7.240, G8.260, G8.270, G 50, G 50 A, G 55 H, G 55 I, G 55 VH, G 56 I, G.Prima, G1.190, G1.200,

REF.102D

ESCAMA CON CODO IZQUIERDA (417x224)

Comp. 155084

G MM, G 60, G 60 I, G 70, G 70 A, G 71, G80, G 85, G 86, G 90, G 103, G 104, G 105, G 106, G 107, G 110, G 114, G 115, G 116, G 117, G 135 V, G2.220, G2.230, G4.220, G6.200, G6.210, G7.210, G7.220, G 120, G 121, G 122, G 125, G 130, G 132, G 132 BC, G 151, G 152, G 152 BC, G 152 I, G 160, G 170, G7.240, G8.260, G8.270, G 50, G 50 A, G 55 H, G 55 I, G 55 VH, G 56 I, G.Prima, G1.190, G1.200,

REF.103A

CODO REFUERZO

Comp. 155018

G MM, G 60, G 60 I, G 70, G 70 A, G 71, G80, G 85, G 86, G 90, G 103, G 104, G 105, G 106, G 107, G 110, G 114, G 115, G 116, G 117, G 135 V, G2.220, G2.230, G4.220, G6.200, G6.210, G7.210, G7.220, G 120, G 121, G 122, G 125, G 130, G 132, G 132 BC, G 151, G 152, G 152 BC, G 152 I, G 160, G 170, G7.240, G8.260, G8.270, G 50, G 50 A, G 55 H, G 55 I, G 55 VH, G 56 I, G.Prima, G1.190, G1.200,

REF.400A*

PINTURA AMARILLA (0,4L AEROSOL)

Comp. 245242

G103, G104, G105, G106, G107, G108, G10X, G114, G 115, G117, G120SD, G120SW, G121, G122, G125, G130, G132, G133V, G135V, G13X, G140SW, G152, G167, G170, G175V, G6.200, G6.210, G60, G7.220, G7.240, G70, G71, G8.260, G8.270, G84, G86, G9.320, G90

REF.128B

BANDEJA PIVOTE COMPLETO IZQ.

Comp. 203074

G65, G66, G120SW, G140SW, G167, G240, G9.320, G9.330, G9.330 OLIVE, G10.330

REF.128A

BANDEJA PIVOTE COMPLETO DER

Comp. 203073

G65, G66, G120SW, G140SW, G167, G240, G9.320, G9.330, G9.330 OLIVE, G10.330

REF.105D

CODO REFUERZO

Comp. -

GT1, GT3, GL6.4, GL7, GL8, GX8

REF.151A

HERRAMIENTA DE UNION DE LA CORREA

Comp. 203014

G103, G104, G105, G106, G107, G108, G10X, G114, G 115, G117, G120SD, G120SW, G121, G122, G125, G130, G132, G133V, G135V, G13X, G140SW, G152, G167, G170, G175V, G6.200, G6.210, G60, G7.220, G7.240, G70, G71, G8.260, G8.270, G84, G86, G9.320, G90

REF.111B

BANDEJA RECEPTORA KW (DERECHA) (580x263)

Comp. 155128

G 103, G 104, G 105, G 106, G 107, G 108, G 10X, G 114, G 115, G 117, G 120 SD, G 120SW, G 121, G 122, G 125, G 130, G 132, G 133V, G 135 V, G 13X, G 140SW, G 152, G 167, G 170, G 175V, G 6.200, G 6.210, G 60, G 7.220, G 7.240, G 70, G 71, G 8.260, G 8.270, G 84, G 86, G 9.320, G 90

REF.112B

BANDEJA RECEPTORA KW (IZQUIERDA) (580x263)

Comp. 155127

G 103, G 104, G 105, G 106, G 107, G 108, G 10X, G 114, G 115, G 117, G 120 SD, G 120SW, G 121, G 122, G 125, G 130, G 132, G 133V, G 135 V, G 13X, G 140SW, G 152, G 167, G 170, G 175V, G 6.200, G 6.210, G 60, G 7.220, G 7.240, G 70, G 71, G 8.260, G 8.270, G 84, G 86, G 9.320, G 90

REF.118D

SEMIBRIDA ALUMINIO MACHO/HEMBRA DIAM 40 KIT 2 tornillos, 2 tuercas y 2 arandelas Ø28

Comp. 175017

G 65, G 66, G 120 SW, G 140 SW, G 167, G 240, G9.320, G9.330, G9.330 Olive, G10.330,

REF.128E

M16

TORNILLO M16 X110 ZN 8,8 cabeza estrecha ARANDELA M16 ZN TUERCA AUTOFRENANTE M16 ZN

Comp. (65069+388025+65016)

G65, G66, G120SW, G140SW, G167, G240, G9.320, G9.330, G9.330 OLIVE, G10.330

REF.197A

M8

TORNILLO Y TUERCA M8 X40 (sacudidor a sujección barra)

Comp. 060023, 060003

G MM, G 60, G 60 I, G 70, G 70 A, G 71, G80, G 85, G 86, G 90, G 103, G 104, G 105, G 106, G 107, G 110, G 114, G 115, G 116, G 117, G 135 V, G2.220, G2.230, G4.220, G6.200, G6.210, G7.210, G7.220, G 120, G 121, G 122, G 125, G 130, G 132, G 132 BC, G 151, G 152, G 152 BC, G 152 I, G 160, G 170, G7.240, G8.260, G8.270, G 50, G 50 A, G 55 H, G 55 I, G 55 VH, G 56 I, G.Prima, G1.190, G1.200,

REF.197B

M10

KIT 2TORNILLOS M10x30, 2TUERCAS Y 2 ARANDELAS (sujección barra a columna)

Comp. 065393, 065078,

G MM, G 60, G 60 I, G 70, G 70 A, G 71, G80, G 85, G 86, G 90, G 103, G 104, G 105, G 106, G 107, G 110, G 114, G 115, G 116, G 117, G 135 V, G2.220, G2.230, G4.220, G6.200, G6.210, G7.210, G7.220, G 120, G 121, G 122, G 125, G 130, G 132, G 132 BC, G 151, G 152, G 152 BC, G 152 I, G 160, G 170, G7.240, G8.260, G8.270, G 50, G 50 A, G 55 H, G 55 I, G 55 VH, G 56 I, G.Prima, G1.190, G1.200,

REF.197C

M10

KIT: 2TORNILLOS 8,8 M10x70 + 2 TUERCAS AUTOFRENO + 2 ARANDELAS (semibrida D35 a columna). Al, Ø25

Comp. 065394,065013,065078

G MM, G 60, G 60 I, G 70, G 70 A, G 71, G80, G 85, G 86, G 90, G 103, G 104, G 105, G 106, G 107, G 110, G 114, G 115, G 116, G 117, G 135 V, G2.220, G2.230, G4.220, G6.200, G6.210, G7.210, G7.220, G 120, G 121, G 122, G 125, G 130, G 132, G 132 BC, G 151, G 152, G 152 BC, G 152 I, G 160, G 170, G7.240, G8.260, G8.270, G 50, G 50 A, G 55 H, G 55 I, G 55 VH, G 56 I, G.Prima, G1.190, G1.200,

REF.197D

M12

KIT: 2TORNILLOS 8,8M12x90, 2 TUERCAS AUTOFRENO, 2 ARANDELAS (semibrida D40 a columna). Al, Ø28

Comp. 065828,065014,065689

G MM, G 60, G 60 I, G 70, G 70 A, G 71, G80, G 85, G 86, G 90, G 103, G 104, G 105, G 106, G 107, G 110, G 114, G 115, G 116, G 117, G 135 V, G2.220, G2.230, G4.220, G6.200, G6.210, G7.210, G7.220, G 120, G 121, G 122, G 125, G 130, G 132, G 132 BC, G 151, G 152, G 152 BC, G 152 I, G 160, G 170, G7.240, G8.260,

REF.197E

M10

KIT 2TORNILLOS M10x45, 2TUERCAS Y 2 ARANDELAS (sujección barra a columna)

Comp. 065276, 065078,

G 65, G 66, G 120 SW, G 140 SW, G 167, G 240, G9.320, G9.330, G9.330 Olive, G10.330,

REF.197F

M8

KIT 2TORNILLOS M8x55, M8X45, 2TUERCAS Y 2 ARANDELAS

Comp. 065300 (8x45),

G MM, G 60, G 60 I, G 70, G 70 A, G 71, G80, G 85, G 86, G 90, G 103, G 104, G 105, G 106, G 107, G 110, G 114, G 115, G 116, G 117, G 135 V, G2.220, G2.230, G4.220, G6.200, G6.210, G7.210, G7.220, G 120, G 121, G 122, G 125, G 130, G 132, G 132 BC, G 151, G 152, G 152 BC, G 152 I, G 160, G 170, G7.240, G8.260, G8.270, G 50, G 50 A, G 55 H, G 55 I, G 55 VH, G 56 I, G.Prima, G1.190, G1.200,

GREGOIRE COMPATIBLE

EDUARDO

REF.110A

CINTA 11 METROS sin grapa (320mm) SIN TRANSPORTE

Comp. -

GMM, G55M, G55H, G60, G60KW, G70, G90, G104, G106, G107, G108, G110, G114, G115, G117, G120, G122, G125, G132 2B, G132BC, G152 2B, GPrima, G1.180, G1.190, G1.200, G2.220, G2.230, G3.220, G3.230, G3.250, G6.200, G6.210, G7.210, G7.220, G7.240, G8.260

REF.110B

CINTA METRO LINEAL (320mm) SIN TRANSPORTE

Comp. 285916

GM 420, PMS, 301 BC, MINI 3, GMM, G 55 M, G 55 H, G 60, G 60 KW, G 65, G 66, G 70, G 90, G 104, G 106, G 107, G 108, G 110, G 114, G 115, G 117, G 120, G 120 K, G 120 KW, G 120 SW, G 122, G 125, G 130, G 132 2B, G 132 BC, G 133, G 134, G 140 SW, G 152 2B, G 152 BC, G 152 I, G 160, G 167, G 170, G 240 , G Prima, G1.180, G1.190, G1.200, G2.220, G2.230, G3.220, G3.230, G3.250, G6.200, G6.210, G7.210, G7.220, G7.240, G8.260

REF.340B

GRAPA acero inoxidable para 320mm con tornillos

Comp. 24005

GMM, G55M, G55H, G60, G60KW, G70, G90, G104, G106, G107, G108, G110, G114, G115, G117, G120, G122, G125, G132 2B, G132BC, G152 2B, GPrima, G1.180, G1.190, G1.200, G2.220, G2.230, G3.220, G3.230, G3.250, G6.200, G6.210, G7.210, G7.220, G7.240, G8.260

REF.340C

GRAPA acero inoxidable para 320mm con clavos Cu

Comp. 24005

GMM, G55M, G55H, G60, G60KW, G70, G90, G104, G106, G107, G108, G110, G114, G115, G117, G120, G122, G125, G132 2B, G132BC, G152 2B, GPrima, G1.180, G1.190, G1.200, G2.220, G2.230, G3.220, G3.230, G3.250, G6.200, G6.210, G7.210, G7.220, G7.240, G8.260

REF.110C*

CINTA 11 METROS sin grapa (240mm) SIN TRANSPORTE

Comp. -

PMME, PMM85, PMM86, G50E, G50A, G50H, G50M, G70AL, G70E, G71, G71E, G80, G85, G86, G103, G105, G135, G4.220

REF.110D

CINTA METRO LINEAL (240mm) SIN TRANSPORTE

Comp. 285123

PMME, PMM85, PMM86, G50E, G50A, G50H, G50M, G70AL, G70E, G71, G71E, G80, G85, G86, G103, G105, G135, G4.220

REF.340A

GRAPA acero inoxidable para 240mm con tornillos

Comp. 24018

PMME, PMM85, PMM86, G50E, G50A, G50H, G50M, G70AL, G70E, G71, G71E, G80, G85, G86, G103, G105, G135, G4.220

REF.340D

GRAPA acero inoxidable para 240mm con clavos Cu

Comp. 24018

PMME, PMM85, PMM86, G50E, G50A, G50H, G50M, G70AL, G70E, G71, G71E, G80, G85, G86, G103, G105, G135, G4.220

REF.110E

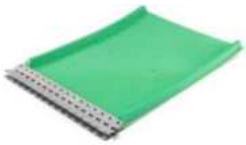

CINTA METRO LINEAL (320mm) (2 PERFILES LATERALES) OLIVAS. SIN TRANSPORTE

Comp. 285919

GM240, G65, G66, G67, G120SW, G140SW, G170

REF.145A

GUIA CINTA 240 5 mm diámetro

Comp. 24019

PMME, PMM85, PMM86, G50E, G50A, G50H, G50M, G70AL, G70E, G71, G71E, G80, G85, G86, G103, G105, G135, G4.220

REF.145B

GUIA CINTA 320 5 mm diámetro

Comp. 24004

GMM, G55M, G55H, G60, G60KW, G70, G90, G104, G106, G107, G108, G110, G114, G115, G117, G120, G122, G125, G132 2B, G132BC, G152 2B, GPrima, G1.180, G1.190, G1.200, G2.220, G2.230, G3.220, G3.230, G3.250, G6.200, G6.210, G7.210, G7.220, G7.240, G8.260

REF.351D

CLAVOS DE COBRE CON PUNTA (diám 3,9x24 mm)

Comp. 950104

G103, G104, G105, G106, G107, G108, G10X, G114, G 115, G117, G120SD, G120SW, G121, G122, G125, G130, G132, G133V, G135V, G13X, G140SW, G152, G167, G170, G175V, G6.200, G6.210, G60, G7.220, G7.240, G70, G71, G8.260, G8.270, G84, G86, G9.320, G90

REF.154C

CINTA ASPIRACIÓN 910X360 con grapa

Comp. 285193

G103, G104, G105, G106, G107, G108, G10X, G114, G 115, G117, G120SD, G120SW, G121, G122, G125, G130, G132, G133V, G135V, G13X, G140SW, G152, G167, G170, G175V, G6.200, G6.210, G60, G7.220, G7.240, G70, G71, G8.260, G8.270, G84, G86, G9.320, G90

REF.339R

GRAPA RS62 unión inox para cintas pequeñas (1,2m)

Comp. -

G103, G104, G105, G106, G107, G108, G10X, G114, G 115, G117, G120SD, G120SW, G121, G122, G125, G130, G132, G133V, G135V, G13X, G140SW, G152, G167, G170, G175V, G6.200, G6.210, G60, G7.220, G7.240, G70, G71, G8.260, G8.270, G84, G86, G9.320, G90

REF.339S

UNIÓN inox para clavos (1m)

Comp. 24020

G103, G104, G105, G106, G107, G108, G10X, G114, G 115, G117, G120SD, G120SW, G121, G122, G125, G130, G132, G133V, G135V, G13X, G140SW, G152, G167, G170, G175V, G6.200, G6.210, G60, G7.220, G7.240, G70, G71, G8.260, G8.270, G84, G86, G9.320, G90

REF.351C

CLAVOS DE COBRE CON PUNTA (diám 2,1x17 mm)

Comp. -

G103, G104, G105, G106, G107, G108, G10X, G114, G 115, G117, G120SD, G120SW, G121, G122, G125, G130, G132, G133V, G135V, G13X, G140SW, G152, G167, G170, G175V, G6.200, G6.210, G60, G7.220, G7.240, G70, G71, G8.260, G8.270, G84, G86, G9.320, G90

REF.154J

CINTA ASPIRACIÓN 1060X550 MM con grapa

Comp. 285970

G9

REF.154K

CINTA ASPIRACIÓN 900X500 MMcon grapa

Comp. 285906

G8

REF.187A

PLACA SOPORTE SACUDIDOR

Comp. 385182

G103, G104, G105, G106, G107, G108, G10X, G114, G 115, G117, G120SD, G120SW, G121, G122, G125, G130, G132, G133V, G135V, G13X, G140SW, G152, G167, G170, G175V, G6.200, G6.210, G60, G7.220, G7.240, G70, G71, G8.260, G8.270, G84, G86, G9.320, G90

Compruebe las Ref. antes.

Todas las marcas comerciales pertenecen a sus respectivos propietarios y su uso es solo informativo.

WWW.EDUARDOREPUESTOSAGRICOLAS.COM

IVA no incluido

Transporte EU gratuito en pedidos 600€

GREGOIRE COMPATIBLE

EDUARDO

REF.180A

CESTA de 240 mm para cinta olivo G140,G120,G9

Comp. 265287

G 65, G 66, G 67, G 120 SW, G 133, G 134, G 140 SW, G 170, G 240, G.8270, G9.320, G9.330 V

REF.180B

CESTA 240 mm para cinta de 320 mm

Comp. 265279

GM420, PMS, 301 BC, MINI 3, GMM, G 55 M, G 55 H, G 60, G 60 KW, G 70, G 90, G 104, G 106, G 107, G 108, G 110, G 114, G 115, G 117, G 120, G 120 K, G 120 KW, G 122, G 125, G 130, G 132 2B, G 132 BC, G 152 2B, G 152 BC, G 152 I, G 160, G 167, G 170, GPrima, G1.180, G1.190, G1.200, G2.220, G2.230, G3.220,

REF.180D

CESTA 160 mm para cinta de 240 mm

Comp. 265278

PMME, PMM85, PMM86, G50E, G50A, G50H, G50M, G70AL, G70E, G71, G71E, G80, G85, G86, G103, G105, G135, G4.220

REF.121B

TORNILLO +TUERCA+ARANDELA M8X30

Comp. 060062

PMME, PMM, GMM, G 50, G 50 A, G 50 E, G 55 H, G 55 I, G 55 VH, G 56 I, G 60, G 60 I, G 60 KW, G 60 WH, G 65, G 66, G 70, G 70 A, G 71, G 80, G 84, G 85, G 86, G 90, G 103, G 104, G 105, G 106, G 107, G 108, G 110, G 114, G 115, G 116, G 117, G 120, G 120 SW, G 121, G 122, G 125, G 130, G 132, G 132 BC, G 135V, G 140 SW, G 151, G 152, G 152 BC, G 152 I, G 160, G 167, G 170, G 175 V, G 240, G Prima, G1.190, G1.200, G2.220, G2.230, G3.220, G3.230, G3.250, G4.200, G4.210, G4.220, G5.310, G5.320, G6.200, G6.210, G7.200, G7.210, G7.220, G7.240, G8.260, G8.270, G9.320, G9.330, G10.330, G10.380, GL7.4, GL8, GX8, GM7.4

REF.185C

PLETINA 40X305X5MM

Comp. 345342

G120, G140SW

REF.185A

PLACA RIGIDEZ CESTA

Comp. 345594

GM420, PMS, 301 BC, MINI 3, GMM, G 55 M, G 55 H, G 60, G 60 KW, G 70, G 90, G 104, G 106, G 107, G 108, G 110, G 114, G 115, G 117, G 120, G 120 K, G 120 KW, G 122, G 125, G 130, G 132 2B, G 132 BC, G 152 2B, G 152 BC, G 152 I, G 160, G 167, G 170, GPrima, G1.180, G1.190, G1.200, G2.220, G2.230, G3.220, G3.230, G3.250, G6.200, G6.210, G7.210, G7.220, G7.240, G8.260, G8.270,

REF.185B

PLACA RIGIDEZ CESTA

Comp. 346272

PMME, PMM85, PMM86, G50E, G50A, G50H, G50M, G70AL, G70E, G71, G71E, G80, G85, G86, G103, G105, G135, G4.220

REF.153K

¡ NUEVO !

BABERO SALIDA LATERAL

Comp. 285632

PMME, PMM, GMM, G50, G50A, G50E, G55H, G55I, G55VH, G56I, G60, G60I, G60KW, G60WH, G65, G66, G70, G70A, G71, G80, G84, G85, G86, G90, G103, G104, G105, G106, G107, G108, G110, G114, G115, G116, G117, G120, G120SW, G121, G122, G125, G130, G132, G132 BC, G135V, G140 SW, G151, G152, G152BC, G152I, G160, G167, G170, G175 V, G240, GPrima, G1.190, G1.200, G2.220, G2.230, G3.220, G3.230, G3.250, G4.200, G4.210, G4.220, G5.310, G5.320, G6.200, G6.210, G7.200, G7.210, G7.220, G7.240, G8.260, G8.270, G9.320, G9.330, G10.330, G10.380, GL7.4, GL8, GX8, GM7.4

REF.153E

BABERO ANTERIOR DERECHA (3 lonas) 4,2mm VERDE

Comp. 285005

PMME, PMM, GMM, G50, G50A, G50E, G55H, G55I, G55VH, G56I, G60, G60I, G60KW, G60WH, G65, G66, G70, G70A, G71, G80, G84, G85, G86, G90, G103, G104, G105, G106, G107, G108, G110, G114, G115, G116, G117, G120, G120SW, G121, G122, G125, G130, G132, G132 BC, G135V, G140 SW, G151, G152, G152BC, G152I, G160, G167, G170, G175 V, G240, GPrima, G1.190, G1.200, G2.220, G2.230, G3.220, G3.230, G3.250, G4.200, G4.210, G4.220, G5.310, G5.320, G6.200, G6.210, G7.200, G7.210, G7.220, G7.240, G8.260, G8.270, G9.320, G9.330, G10.330, G10.380, GL7.4, GL8, GX8, GM7.4

REF.153F

BABERO ANTERIOR IZQUIERDA (3 lonas) 4,2 mm VERDE

Comp. 285006

PMME, PMM, GMM, G50, G50A, G50E, G55H, G55I, G55VH, G56I, G60, G60I, G60KW, G60WH, G65, G66, G70, G70A, G71, G80, G84, G85, G86, G90, G103, G104, G105, G106, G107, G108, G110, G114, G115, G116, G117, G120, G120SW, G121, G122, G125, G130, G132, G132 BC, G135V, G140 SW, G151, G152, G152BC, G152I, G160, G167, G170, G175 V, G240, GPrima, G1.190, G1.200, G2.220, G2.230, G3.220, G3.230, G3.250, G4.200, G4.210, G4.220, G5.310, G5.320, G6.200, G6.210, G7.200, G7.210, G7.220, G7.240, G8.260, G8.270, G9.320, G9.330, G10.330, G10.380, GL7.4, GL8, GX8, GM7.4

REF.153H

TELA POSTERIOR 320X400mm

Comp. 285012

PMME, PMM, GMM, G50, G50A, G50E, G55H, G55I, G55VH, G56I, G60, G60I, G60KW, G60WH, G65, G66, G70, G70A, G71, G80, G84, G85, G86, G90, G103, G104, G105, G106, G107, G108, G110, G114, G115, G116, G117, G120, G120SW, G121, G122, G125, G130, G132, G132 BC, G135V, G140 SW, G151, G152, G152BC, G152I, G160, G167, G170, G175 V, G240, GPrima, G1.190, G1.200, G2.220, G2.230, G3.220, G3.230, G3.250, G4.200, G4.210, G4.220, G5.310, G5.320, G6.200, G6.210, G7.200, G7.210, G7.220, G7.240, G8.260, G8.270, G9.320, G9.330, G10.330, G10.380, GL7.4, GL8, GX8, GM7.4

REF.182A

MUELLE DERECHO BABERO

Comp. 325004

PMME, PMM, GMM, G50, G50A, G50E, G55H, G55I, G55VH, G56I, G60, G60I, G60KW, G60WH, G65, G66, G70, G70A, G71, G80, G84, G85, G86, G90, G103, G104, G105, G106, G107, G108, G110, G114, G115, G116, G117, G120, G120SW, G121, G122, G125, G130, G132, G132 BC, G135V, G140 SW, G151, G152, G152BC, G152I, G160, G167, G170, G175 V, G240, GPrima, G1.190, G1.200, G2.220, G2.230, G3.220, G3.230, G3.250, G4.200, G4.210, G4.220, G5.310, G5.320, G6.200, G6.210,

REF.182B

MUELLE IZQUIERDO BABERO

Comp. 325005

PMME, PMM, GMM, G50, G50A, G50E, G55H, G55I, G55VH, G56I, G60, G60I, G60KW, G60WH, G65, G66, G70, G70A, G71, G80, G84, G85, G86, G90, G103, G104, G105, G106, G107, G108, G110, G114, G115, G116, G117, G120, G120SW, G121, G122, G125, G130, G132, G132 BC, G135V, G140 SW, G151, G152, G152BC, G152I, G160, G167, G170, G175 V, G240, GPrima, G1.190, G1.200, G2.220, G2.230, G3.220, G3.230, G3.250, G4.200, G4.210, G4.220, G5.310, G5.320, G6.200, G6.210,

REF.184A

SOPORTE BISAGRA DERECHO

Comp. 345007

PMME, PMM, GMM, G50, G50A, G50E, G55H, G55I, G55VH, G56I, G60, G60I, G60KW, G60WH, G65, G66, G70, G70A, G71, G80, G84, G85, G86, G90, G103, G104, G105, G106, G107, G108, G110, G114, G115, G116, G117, G120, G120SW, G121, G122, G125, G130, G132, G132 BC, G135V, G140 SW, G151, G152, G152BC, G152I, G160, G167, G170, G175 V, G240, GPrima, G1.190, G1.200, G2.220, G2.230, G3.220, G3.230, G3.250, G4.200, G4.210, G4.220, G5.310, G5.320, G6.200, G6.210, G7.200, G7.210, G7.220, G7.240, G8.260, G8.270, G9.320, G9.330, G10.330, G10.380, GL7.4, GL8, GX8, GM7.4

REF.184B

SOPORTE BISAGRA IZQUIERDO

Comp. 345008

PMME, PMM, GMM, G50, G50A, G50E, G55H, G55I, G55VH, G56I, G60, G60I, G60KW, G60WH, G65, G66, G70, G70A, G71, G80, G84, G85, G86, G90, G103, G104, G105, G106, G107, G108, G110, G114, G115, G116, G117, G120, G120SW, G121, G122, G125, G130, G132, G132 BC, G135V, G140 SW, G151, G152, G152BC, G152I, G160, G167, G170, G175 V, G240, GPrima, G1.190, G1.200, G2.220, G2.230, G3.220, G3.230, G3.250, G4.200, G4.210, G4.220, G5.310, G5.320, G6.200, G6.210, G7.200, G7.210, G7.220, G7.240, G8.260, G8.270, G9.320, G9.330, G10.330, G10.380, GL7.4, GL8, GX8, GM7.4

REF.184C

PLACA FRONTAL TRASERA

Comp. 345009

PMME, PMM, GMM, G50, G50A, G50E, G55H, G55I, G55VH, G56I, G60, G60I, G60KW, G60WH, G65, G66, G70, G70A, G71, G80, G84, G85, G86, G90, G103, G104, G105, G106, G107, G108, G110, G114, G115, G116, G117, G120, G120SW, G121, G122, G125, G130, G132, G132 BC, G135V, G140 SW, G151, G152, G152BC, G152I, G160, G167, G170, G175 V, G240, GPrima, G1.190, G1.200, G2.220, G2.230, G3.220, G3.230, G3.250, G4.200, G4.210, G4.220, G5.310, G5.320, G6.200, G6.210, G7.200, G7.210, G7.220, G7.240, G8.260, G8.270, G9.320, G9.330, G10.330, G10.380, GL7.4, GL8, GX8, GM7.4

REF.153J

TELA 3 LONAS (4,2MM) 55CMX 1M ..

Comp.

PMME, PMM, GMM, G50, G50A, G50E, G55H, G55I, G55VH, G56I, G60, G60I, G60KW, G60WH, G65, G66, G70, G70A, G71, G80, G84, G85, G86, G90, G103, G104, G105, G106, G107, G108, G110, G114, G115, G116, G117, G120, G120SW, G121, G122, G125, G130, G132, G132 BC, G135V, G140 SW, G151, G152, G152BC, G152I, G160, G167, G170, G175 V, G240, GPrima, G1.190, G1.200, G2.220, G2.230, G3.220, G3.230, G3.250, G4.200, G4.210, G4.220, G5.310, G5.320, G6.200, G6.210, G7.200, G7.210, G7.220, G7.240, G8.260, G8.270, G9.320, G9.330, G10.330, G10.380, GL7.4, GL8, GX8, GM7.4

REF.135A

ANILLO ACOPLAMIENTO

Comp. 05043

G103, G104, G105, G106, G107, G108, G10X, G114, G 115, G117, G120SD, G120SW, G121, G122, G125, G130, G132, G133V, G135V, G13X, G140SW, G152, G167, G170, G175V, G6.200, G6.210, G60, G7.220, G7.240, G70, G71, G8.260, G8.270, G84, G86, G9.320, G90

REF.135B

ANILLO ACOPLAMIENTO

Comp. 05239

G103, G104, G105, G106, G107, G108, G10X, G114, G 115, G117, G120SD, G120SW, G121, G122, G125, G130, G132, G133V, G135V, G13X, G140SW, G152, G167, G170, G175V, G6.200, G6.210, G60, G7.220, G7.240, G70, G71, G8.260, G8.270, G84, G86, G9.320, G90

REF.134B

ACOPLAMIENTO LADO MOTOR VENTILADOR + LADO ROTOR VENTILADOR

Comp. 388603+388602

G103, G104, G105, G106, G107, G108, G10X, G114, G 115, G117, G120SD, G120SW, G121, G122, G125, G130, G132, G133V, G135V, G13X, G140SW, G152, G167, G170, G175V, G6.200, G6.210, G60, G7.220, G7.240, G70, G71, G8.260, G8.270, G84, G86, G9.320, G90

IVA no incluido

Transporte EU gratuito en pedidos 600€

Todas las marcas comerciales pertenecen a sus respectivos propietarios y su uso es solo informativo.

WWW.EDUARDOREPUESTOSAGRICOLAS.COM

Compruebe las Ref. antes.

GREGOIRE COMPATIBLE

EDUARDO

REF.117A

POLEA 185 MM. eje 20mm

Comp. 120403

G 86, G 103, G 104, G 105, G 106, G 107, G 108, G 10X, G 114, G 115, G 117, G 120 SD, G 120SW, G 121, G 122, G 125, G 130, G 132, G 133V, G 135 V, G 13X, G 140SW, G 152, G 167, G 170, G 175V, G 6.200, G 6.210, G 60, G 7.220, G 7.240, G 70, G 71, G 8.260, G 8.270, G 84, G 86, G 9.320, G 90

REF.117B

POLEA 145 MM. eje 20mm

Comp. 120404

G 7.240, G 70, G 8.260, G 86, G 103, G 104, G 105, G 106, G 107, G 108, G 10X, G 114, G 115, G 117, G 120 SD, G 120SW, G 121, G 122, G 125, G 130, G 132, G 133V, G 135 V, G 13X, G 140SW, G 152. G 167. G 170.

REF.117D

POLEA 155 MM. eje 30mm

Comp. 120663

G 103, G 104, G 105, G 106, G 107, G 108, G 10X, G 114, G 115, G 117, G 120 SD, G 120SW, G 121, G 122, G 125, G 130, G 132, G 133V, G 135 V, G 13X, G 140SW, G 152, G 167, G 170, G 175V, G 6.200. G 6.210. G 60. G 7.220. G 7.240. G 70. G 71. G 8.260. G

REF.117E

0

Comp. 386508

G 103, G 104, G 105, G 106, G 107, G 108, G 10X, G 114, G 115, G 117, G 120 SD, G 120SW, G 121, G 122, G 125, G 130, G 132, G 133V, G 135 V, G 13X, G 140SW, G 152, G 167, G 170, G 175V, G 6.200, G 6.210, G 60, G 7.220, G 7.240, G 70, G 71, G 8.260, G 8.270, G 84, G 86, G 9.320, G 90

REF.117F

POLEA 145 MM con hueco sensor, eje 20mm

Comp. 124670

REF.117G

POLEA 185 MM. eje 25mm

Comp. 502818

REF.117H

POLEA 206MM. eje 30mm

Comp. 120662

G 103, G 104, G 105, G 106, G 107, G 108, G 10X, G 114, G 115, G 117, G 120 SD, G 120SW, G 121, G 122, G 125, G 130, G 132, G 133V, G 135 V, G 13X, G 140SW, G 152, G 167, G 170, G 175V, G 6.200, G 6.210, G 60, G 7.220, G 7.240, G 70, G 71, G 8.260, G 8.270, G 84, G 86, G 9.320, G 90

REF.117J

0

Comp. 385289

REF.117K

0

Comp. 385414

REF.126A

POLEA MGT 300 + TAPER LOCK 25

Comp. 280017 (280028+230006)

G 103, G 104, G 105, G 106, G 107, G 108, G 10X, G 114, G 115, G 117, G 120 SD, G 120SW, G 121, G 122, G 125, G 130, G 132, G 133V, G 135 V, G 13X, G 140SW, G 152, G 167, G 170, G 175V, G 6.200, G 6.210, G 60, G 7.220, G 7.240, G 70, G 71, G 8.260, G 8.270, G 84, G 86, G 9.320, G 90

REF.126B

POLEA MGT 400 +TAPER LOCK 30

Comp. 280018 (280031+230010)

G 103, G 104, G 105, G 106, G 107, G 108, G 10X, G 114, G 115, G 117, G 120 SD, G 120SW, G 121, G 122, G 125, G 130, G 132, G 133V, G 135 V, G 13X, G 140SW, G 152, G 167, G 170, G 175V, G 6.200, G 6.210, G 60, G 7.220, G 7.240, G 70, G 71, G 8.260, G 8.270, G 84, G 86, G 9.320, G 90

★ REF.117L

¡ NUEVO !

POLEA 106 MM eje 20mm

Comp. 121593

GL7, GL8

★ REF.117M

¡ NUEVO !

POLEA 106 MM

Comp. 389659

GL7, GL9

★ REF.126C

¡ NUEVO !

POLEA MGT 350.1

Comp. 280093

GL7,GL8

★ REF.146A / B / C / D / E

REF.146A EXT20 (055007)

REF.146B EXT25 (055008)

REF.146C EXT30 (055009)

REF.146D INT42 (055018)

REF.146E INT52 (055109)

REF.177A

RETEN ACEITE RODAMIENTO (25x42x8) POLEA Ø20

Comp. 185025

G 103, G 104, G 105, G 106, G 107, G 108, G 10X, G 114, G 115, G 117, G 120 SD, G 120SW, G 121, G 122, G 125, G 130, G 132, G 133V, G 135 V, G 13X, G 140SW, G 152, G 167, G 170, G 175V, G 6.200, G 6.210, G 60, G 7.220, G 7.240, G 70, G 71, G 8.260, G 8.270, G 84, G 86, G 9.320, G 90

REF.177E

RETEN ACEITE RODAMIENTO (28x52x7) POLEA Ø25

Comp. 185923

REF.177C

RETEN ACEITE RODAMIENTO (38x55x10) POLEA Ø30

Comp. 185034

REF.183G

RODAMIENTO 6004 1RS POLEA DIAM 20

Comp. 330250,330008

REF.183H

RODAMIENTO (6205 RS NRC3)POLEA DIAM 25

Comp. 330251,330053

REF.183I

RODAMIENTO - POLEA DE LA CORREA 6006 2RS POLEA DIAM 30

Comp. 330009

REF.168A

POLEA COJINETE

Comp. 120402

G 103, G 104, G 105, G 106, G 107, G 108, G 10X, G 114, G 115, G 117, G 120 SD, G 120SW, G 121, G 122, G 125, G 130, G 132, G 133V, G 135 V, G 13X, G 140SW, G 152, G 167, G 170, G 175V, G 6.200, G 6.210, G 60, G 7.220, G 7.240, G 70, G 71, G 8.260, G 8.270, G 84, G 86, G 9.320, G 90

★ REF.168B

SOPORTE COJINETE INFERIOR

Comp. 120459

G 103, G 104, G 105, G 106, G 107, G 108, G 10X, G 114, G 115,

Compruebe las Ref. antes.

Todas las marcas comerciales pertenecen a sus respectivos propietarios y su uso es solo informativo.

WWW.EDUARDOREPUESTOSAGRICOLAS.COM

IVA no incluido

Transporte EU gratuito en pedidos 600€

GREGOIRE COMPATIBLE

EDUARDO

REF.147A

COJINETE DE GOMA 20X75X50

Comp. 386655,025024

REF.147B

COJINETE DE GOMA 14X30X42

Comp. 025012

REF.147C

COJINETE DE GOMA 24X48X44

Comp. 025015,025039

REF.147E

COJINETE DE GOMA 28X48X66

Comp. 025014

REF.147F

COJINETE DE GOMA ELÍPTICO16X65X60

Comp. 025124, 025011

REF.147H*

COJINETE DE GOMA PMM

Comp. 385199, 561269

PMM

REF.147G

CASQUILLO 14x24x49

Comp. 385087

REF.127A

BLOQUE SILENCIADOR (BANDEJA RECEPTORA) 16X32X76

Comp. 385615

G65, G66, G120SW, G140SW, G167, G240, G9.320, G9.330, G9.330 OLIVE, G10.330

REF.147J*

COJINETE DE GOMA ELÍPTICO16X65,5X60

Comp. 025142, 025122

GL7,GL8

REF.190A

ESPACIADOR 28x38x66

Comp. 385997

G 103, G 104, G 105, G 106, G 107, G 108, G 10X, G 114, G 115, G 117, G 120 SD, G 120SW, G 121, G 122, G 125, G 130, G 132, G 133V, G 135 V, G 13X, G 140SW, G 152, G 167, G 170, G 175V, G 6.200, G 6.210, G 60, G 7.220, G 7.240, G 70, G 71, G 8.260, G 8.270, G 84, G 86, G 9.320, G 90

REF.179A

ANILLO RODAMIENTO DIAM 38

Comp. 265265

G 103, G 104, G 105, G 106, G 107, G 108, G 10X, G 114, G 115, G 117, G 120 SD, G 120SW, G 121, G 122, G 125, G 130, G 132, G 133V, G 135 V, G 13X, G 140SW, G 152, G 167, G 170, G 175V, G 6.200, G 6.210, G 60, G 7.220, G 7.240, G 70, G 71, G 8.260, G 8.270, G 84, G 86, G 9.320, G 90

REF.181A

MUELLE TENSIÓN POLEAS CINTA ASPIRACIÓN 125mm

Comp. 325001

G 103, G 104, G 105, G 106, G 107, G 108, G 10X, G 114, G 115, G 117, G 120 SD, G 120SW, G 121, G 122, G 125, G 130, G 132, G 133V, G 135 V, G 13X, G 140SW, G 152, G 167, G 170, G 175V, G 6.200, G 6.210, G 60, G 7.220, G 7.240, G 70, G 71, G 8.260, G 8.270, G 84, G 86, G 9.320, G 90

REF.181B*

MUELLE COMPRESIÓN CINTA ASPIRACIÓN 85mm

Comp. 325003

G 103, G 104, G 105, G 106, G 107, G 108, G 10X, G 114, G 115, G 117, G 120 SD, G 120SW, G 121, G 122, G 125, G 130, G 132, G 133V, G 135 V, G 13X, G 140SW, G 152, G 167, G 170, G 175V, G 6.200, G 6.210, G 60, G 7.220, G 7.240, G 70, G 71, G 8.260, G 8.270, G 84, G 86, G 9.320, G 90

REF.152C

ST20 RODAMIENTO

Comp. 240023, 385098

G 103, G 104, G 105, G 106, G 107, G 108, G 10X, G 114, G 115, G 117, G 120 SD, G 120SW, G 121, G 122, G 125, G 130, G 132, G 133V, G 135 V, G 13X, G 140SW, G 152, G 167, G 170, G 175V, G 6.200, G 6.210, G 60, G 7.220, G 7.240, G 70, G 71, G 8.260, G 8.270, G 84, G 86, G 9.320, G 90

REF.152B

ST25 RODAMIENTO

Comp. 385347

G 6.210

REF.152M

ST30 RODAMIENTO

Comp. 240040

REF.152D

NP25 RODAMIENTO

Comp. 240008

G 103, G 104, G 105, G 106, G 107, G 108, G 10X, G 114, G 115, G 117, G 120 SD, G 120SW, G 121, G 122, G 125, G 130, G 132, G 133V, G 135 V, G 13X, G 140SW, G 152, G 167, G 170, G 175V, G 6.200, G 6.210, G 60, G 7.220, G 7.240, G 70, G 71, G 8.260, G 8.270, G 84, G 86, G 9.320, G 90

REF.152J

NP30 RODAMIENTO

Comp. 240009

REF.152H

NP35 RODAMIENTO

Comp. 240010

G 103, G 104, G 105, G 106, G 107, G 108, G 10X, G 114, G 115, G 117, G 120 SD, G 120SW, G 121, G 122, G 125, G 130, G 132, G 133V, G 135 V, G 13X, G 140SW, G 152, G 167, G 170, G 175V, G 6.200, G 6.210, G 60, G 7.220, G 7.240, G 70, G 71, G 8.260, G 8.270, G 84, G 86, G 9.320, G 90

REF.152F

NP45 RODAMIENTO

Comp. 240038

G 103, G 104, G 105, G 106, G 107, G 108, G 10X, G 114, G 115, G 117, G 120 SD, G 120SW, G 121, G 122, G 125, G 130, G 132, G 133V, G 135 V, G 13X, G 140SW, G 152, G 167, G 170, G 175V, G 6.200, G 6.210, G 60, G 7.220, G 7.240, G 70, G 71, G 8.260, G 8.270, G 84, G 86, G 9.320, G 90

IVA no incluido

Transporte EU gratuito en pedidos 600€

Todas las marcas comerciales pertenecen a sus respectivos propietarios y su uso es solo informativo.

WWW.EDUARDOREPUESTOSAGRICOLAS.COM

Compruebe las Ref. antes.

GREGOIRE COMPATIBLE

EDUARDO

REF.152G

SFT20 RODAMIENTO

Comp. 240018

G 103, G 104, G 105, G 106, G 107, G 108, G 10X, G 114, G 115, G 117, G 120 SD, G 120SW, G 121, G 122, G 125, G 130, G 132, G 133V, G 135 V, G 13X, G 140SW, G 152, G 167, G 170, G 175V, G 6.200, G 6.210, G 60, G 7.220, G 7.240, G 70, G 71, G 8.260, G 8.270, G 84, G 86, G 9.320, G 90

REF.152A

SFT25 RODAMIENTO

Comp. 240019

G 6.210, G 7.240, G 8.260

REF.152K

SFT30 RODAMIENTO

Comp. 240020

G 7.240

REF.152L

SFT35 RODAMIENTO

Comp. -

REF.152N

SF25 RODAMIENTO

Comp. 240014

REF.152P

SF30 RODAMIENTO

Comp. 240015

G 8.260

REF.152Q

SF35 RODAMIENTO

Comp. 240016

G 86

REF.152E

SF45 RODAMIENTO

Comp. 240017

G 103, G 104, G 105, G 106, G 107, G 108, G 10X, G 114, G 115, G 117, G 120 SD, G 120SW, G 121, G 122, G 125, G 130, G 132, G 133V, G 135 V, G 13X, G 140SW, G 152, G 167, G 170, G 175V, G 6.200, G 6.210, G 60, G 7.220, G 7.240, G 70, G 71, G 8.260, G 8.270, G 84, G 86, G 9.320, G 90

REF.169F*

APOYO PIVOTANTE DERECHO TIPO

Comp. 120523

G 103, G 104, G 105, G 106, G 107, G 108, G 10X, G 114, G 115, G 117, G 120 SD, G 120SW, G 121, G 122, G 125, G 130, G 132, G 133V, G 135 V, G 13X, G 140SW, G 152, G 167, G 170, G 175V, G 6.200, G 6.210, G 60, G 7.220,

REF.169G*

APOYO PIVOTANTE IZQUIERDA TIPO

Comp. 120524

G 103, G 104, G 105, G 106, G 107, G 108, G 10X, G 114, G 115, G 117, G 120 SD, G 120SW, G 121, G 122, G 125, G 130, G 132, G 133V, G 135 V, G 13X, G 140SW, G 152, G 167, G 170, G 175V, G 6.200, G 6.210, G 60, G 7.220, G 7.240, G 70, G 71, G 8.260, G 8.270, G 84, G 86, G 9.320, G 90

REF.189C*

VARILLA ROSCADA REGULACIÓN 598mm

Comp. 385229

G152

REF.189D*

VARILLA ROSCADA REGULACIÓN 490mm

Comp. 385754

G122, GL7

REF.199A

BRAZO EXCÉNTRICO

Comp. 120676

G 60, G 152

REF.199C*

BRAZO DE LA BARRA DE PRESION longitud 140

Comp. 123939

G 132

REF.186A

M28

TUERCA REGULACIÓN IZQDA. 28X150

Comp. 385017

G 103, G 104, G 105, G 106, G 107, G 108, G 10X, G 114, G 115, G 117, G 120 SD, G 120SW, G 121, G 122, G 125, G 130, G 132, G 133V, G 135 V, G 13X, G 140SW, G 152, G 167, G 170, G 175V, G 6.200, G 6.210, G 60, G 7.220, G 7.240, G 70, G 71, G 8.260, G 8.270, G 84, G 86, G 9.320, G 90

REF.186B

M28

TUERCA REGULACIÓN DECHA. 28X150

Comp. 385018

G 103, G 104, G 105, G 106, G 107, G 108, G 10X, G 114, G 115, G 117, G 120 SD, G 120SW, G 121, G 122, G 125, G 130, G 132, G 133V, G 135 V, G 13X, G 140SW, G 152, G 167, G 170, G 175V, G 6.200, G 6.210, G 60, G 7.220, G 7.240, G 70, G 71, G 8.260, G 8.270, G 84, G 86, G 9.320, G 90

REF.157D*

TUERCA DE AJUSTE L=140MM

Comp. 385019

6152, G55

REF.172A

M24

EJE SUJECION BARRA M24X200

Comp. 124048

G 103, G 104, G 105, G 106, G 107, G 108, G 10X, G 114, G 115, G 117, G 120 SD, G 120SW, G 121, G 122, G 125, G 130, G 132, G 133V, G 135 V, G 13X, G 140SW, G 152, G 167, G 170, G 175V, G 6.200, G 6.210, G 60, G 7.220, G 7.240, G 70, G 71, G 8.260, G 8.270, G 84, G 86, G 9.320, G 90

REF.172C

M24

EJE SUJECCIÓN DE LA BARRA D28-168 M24X200

Comp. 501684

Compruebe las Ref. antes.

Todas las marcas comerciales pertenecen a sus respectivos propietarios y su uso es solo informativo.

WWW.EDUARDOREPUESTOSAGRICOLAS.COM

IVA no incluido

Transporte EU gratuito en pedidos 600€

REF.172L

M24

TORNILLO ESPECIAL ACHAFLANADO M24X175

Comp. 501684

REF.172M

M24

TUERCA ESPECIAL ACHAFLANADA M24

Comp. -

REF.172N

M24

TORNILLO HEXAGONAL M24X160 ZN

Comp. 65235

REF.172H

M24

TUERCA AUTOFRENANTE M24 ZN

Comp. 65973

REF.172G

M24

ARANDELA M24 ZN

Comp. 65071

REF.172B

M20

TORNILLO BARRA CONEXIÓN M20X151

Comp. 386118

REF.172J

M20

TUERCA ESPECIAL ACHAFLANADA M20

Comp. 386120

REF.172K

M20

TUERCA HU M20X150 - ZINC

Comp. 65786

REF.172D

M16

TORNILLO BARRA UNIÓN M16X130

Comp. 385353

G 103, G 104, G 105, G 106, G 107, G 108, G 10X, G 114, G 115, G 117, G 120 SD, G 120SW, G 121, G 122, G 125, G 130, G 132, G 133V, G 135 V, G 13X, G 140SW, G 152, G 167, G 170, G 175V, G 6.200, G 6.210, G 60, G 7.220, G 7.240, G 70, G 71, G 8.260, G 8.270, G 84, G 86, G 9.320, G 90

REF.172E

M16

TUERCA ACHAFLANADA M16

Comp. 385355

G 103, G 104, G 105, G 106, G 107, G 108, G 10X, G 114, G 115, G 117, G 120 SD, G 120SW, G 121, G 122, G 125, G 130, G 132, G 133V, G 135 V, G 13X, G 140SW, G 152, G 167, G 170, G 175V, G 6.200, G 6.210, G 60, G 7.220, G 7.240, G 70, G 71, G 8.260, G 8.270, G 84, G 86, G 9.320, G 90

REF.172F

M16

TUERCA AUTOFRENANTE M16 ZN

Comp. 65016

G 65, G 66, G 120 SW, G 140 SW, G 167, G 240, G9.320, G9.330, G9.330 Olive, G10.330,

REF.160B

M14

TUERCA DE LA BARRA DE UNION M14

Comp. 385189

G 103, G 104, G 105, G 106, G 107, G 108, G 10X, G 114, G 115, G 117, G 120 SD, G 120SW, G 121, G 122, G 125, G 130, G 132, G 133V, G 135 V, G 13X, G 140SW, G 152, G 167, G 170, G 175V, G 6.200, G 6.210, G 60, G 7.220, G 7.240, G 70, G 71, G 8.260, G 8.270, G 84, G 86, G 9.320, G 90

REF.160F

M14

TUERCA AUTOFRENANTE M14 ZN

Comp. 65015

REF.161B

M14

TORNILLO ACHAFLANADO M14 X110 ZN

Comp. 386478

REF.169E

MOLINILLO ASPIRADOR

Comp. 120451

G 103, G 104, G 105, G 106, G 107, G 108, G 10X, G 114, G 115, G 117, G 120 SD, G 120SW, G 121, G 122, G 125, G 130, G 132, G 133V, G 135 V, G 13X, G 140SW, G 152, G 167, G 170, G 175V, G 6.200, G 6.210, G 60, G 7.220, G 7.240, G 70, G 71, G 8.260, G 8.270, G 84, G 86, G 9.320, G 90

REF.193A*

CARCASA LUZ TRASERO

Comp. 165312

G103, G104, G105, G106, G107, G108, G10X, G114, G 115, G117, G120SD, G120SW, G121, G122, G125, G130, G132, G133V, G135V, G13X, G140SW, G152, G167, G170, G175V, G6.200, G6.210, G60, G7.220, G7.240, G70, G71, G8.260, G8.270, G84, G86, G9.320, G90

REF.193B

INTERMITENTE DERECHA / IZQUIERDA

Comp. 165213, 165214

G103, G104, G105, G106, G107, G108, G10X, G114, G 115, G117, G120SD, G120SW, G121, G122, G125, G130, G132, G133V, G135V, G13X, G140SW, G152, G167, G170, G175V, G6.200, G6.210, G60, G7.220, G7.240, G70, G71, G8.260, G8.270, G84, G86, G9.320, G90

REF.193D

FARO COMPLETO

Comp. 165216

G103, G104, G105, G106, G107, G108, G10X, G114, G 115, G117, G120SD, G120SW, G121, G122, G125, G130, G132, G133V, G135V, G13X, G140SW, G152, G167, G170, G175V, G6.200, G6.210, G60, G7.220, G7.240, G70, G71, G8.260, G8.270, G84, G86, G9.320, G90

REF.193E*

LUZ DE GALIBO

Comp. 166565

G 86

REF.188X	Z-15 3/4 ø25mm Comp. 385283
REF.188D	Z-17 1/2 ø20mm Comp. 385251
REF.188E	Z-17 1/2 ø25mm Comp. 385078
REF.188P	Z-17 3/4 ø25 TP 1610 Comp.386300
REF.188H	Z-19 3/4 ø25mm Comp. 385217
REF.188B	Z-21 1/2 ø25mm Comp. 385123
REF.188J	Z-21 3/4 ø25 cubo ø70 Comp. 385370
REF.188Y	Z-23 3/4 ø25mm Comp. 386131
REF.188L	Z-25 1/2 ø25 mm Comp. 387703
REF.188F	Z-25 3/4 ø25mm Comp. 385233
REF.188C	Z-30 1/2 ø25mm Comp. 386550
REF.188K	Z-30 3/4 ø25 TP2517 ø45 Comp.250034
REF.188G	Z-35 3/4 ø25mm Comp. 255009
REF.188A	Z-38 1/2 ø25 TP2517 Comp. 385242
REF.188Z	Z-38 3/4 ø25mm Comp. 385076
REF.188I	Z-38 3/4 ø45 TP2517 Comp.250064

REF.129A

¡ NUEVO !

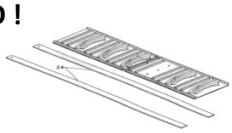

BANDA DE DESGASTE 4M X 5CM X 9MM

Comp. -

G103, G104, G105, G106, G107, G108, G10X, G114, G 115, G117, G120SD, G120SW, G121, G122, G125, G130, G132, G133V, G135V, G13X, G140SW, G152, G167, G170, G175V, G6.200, G6.210, G60, G7.220, G7.240, G70, G71, G8.260, G8.270, G84, G86, G9.320, G90

REF.232B

VARA FIBRA CON TUBO INOX. DOBLADO OLIVAR (longitud 100cm)

Comp. -

REF.233B

VARA FIBRA CONTUBO INOX.SIN DOBLAR OLIVAR (longitud 100cm)

Comp. 84343361

REF.162B

EJE EXCENTRICO DOBLE

Comp. 385248

G 60, G 115, G 122, G 152, G6.210, GL7.4

REF.104A

SACUDIDOR PARA LEVANTAR RAMAS OLIVAR 935mm Ø28

Comp. 265574

9090X, 9090X GE, 9090X GE T3, 9090X GE T4, 9090X GE T5, 9090X H, 9090X H H, 9090X H T4, 9090X O, 9090X O GE, 9090X O GE T3, 9090X O GE T4, 9090X O GE T5, 9090X O H T4, 9090X O T3, 9090X O T4, 9090X O T5, 9090X OP, 9090X OP GE, 9090X T3, 9090X T4, 9090X T5, SB65, VX680, VX7090

REF.190C

EJE Ø25mmX544 POLEA DE TRACCIÓN

Comp. 385681

REF.190B

EJE Ø25mmX495 POLEA DE TRACCIÓN

Comp. 385125

Compruebe las Ref. antes.

WWW.EDUARDOREPUESTOSAGRICOLAS.COM

IVA no incluido
Transporte EU gratuito en pedidos 600€

REF.121A

TORNILLO FIJACIÓN BANDEA KW M8X25

Comp. 60031

G 65, G 66, G 120 SW, G 140 SW, G 167, G 240, G9.320, G9.330, G9.330 Olive, G10.330,

REF.168D

POLEA COJINTE

Comp. 502702

REF.126D

TAPER 2517 (MGT32-25MM)

Comp. 230006

REF.126E

TAPER 2517 (MGT50-30MM)

Comp. 230010

REF.126F

TAPER 2517 DIAM 45

Comp. 230004

REF.171B*

¡ NUEVO !

SOPORTE PARA ENGANCHE RAPIDO SACUDIDOR

Comp. 510906

REF.168E

¡ NUEVO !

ENGRASADOR M6

Comp. 055046

0,40€/u

REF.163A

RODAMIENTO PARA EJE EXCÉNTRICO 100x150x24

Comp. 330230

G 60, G 115, G 122, G 152, G6.211

62,00€/u

REF.177D

RETEN ACEITE RODAMIENTO (85X110X18)

Comp. 185045

39,80€/u

REF.125C

BRIDA TORNILLO M10x30 TUERCA ARANDELA

Comp.

GL7.4, GM7.4, GL6.4, GL8, GX8

REF.125D

BRIDA TORNILLO M12x40 TUERCA ARANDELA

Comp.

GX9,GX10

REF.198D

DEFLECTOR POLEA POSTERIOR DCHA

Comp. 355006

REF.198E

DEFLECTOR POLEA POSTERIOR IZQDA

Comp. 355007

REF.570Q

COJINETE EJES Ø25 1 CUELLO

Comp. -

REF.570A

COJINETE EJES Ø25 RODILLOS-CINTAS

Comp. 920019044,84287485

GREGOIRE COMPATIBLE

EDUARDO

REF.191A

CADENA SENCILLA 12.70 1/2" CINTA 1m

Comp. 95070

G103, G104, G105, G106, G107, G108, G10X, G114, G 115, G117, G120SD, G120SW, G121, G122, G125, G130, G132, G133V, G135V, G13X, G140SW, G152, G167, G170, G175V, G6.200, G6.210, G60, G7.220, G7.240, G70, G71, G8.260, G8.270, G84,

REF.191B

UNION CADENA SENCILLA 12.70

Comp. 95071

G103, G104, G105, G106, G107, G108, G10X, G114, G 115, G117, G120SD, G120SW, G121, G122, G125, G130, G132, G133V, G135V, G13X, G140SW, G152, G167, G170, G175V, G6.200, G6.210, G60, G7.220, G7.240, G70, G71, G8.260, G8.270, G84,

REF.191C

MEDIO ESLABON CADENA SENCILLA 12.70

Comp. 95072

G103, G104, G105, G106, G107, G108, G10X, G114, G 115, G117, G120SD, G120SW, G121, G122, G125, G130, G132, G133V, G135V, G13X, G140SW, G152, G167, G170, G175V, G6.200, G6.210, G60, G7.220, G7.240, G70, G71, G8.260, G8.270, G84, G86, G9.320, G90

★ REF.176B*

¡ NUEVO !

SENSOR CAPACITIVO 2 HILOS

Comp. 166216

REF.191D

CADENA REFORZDA 19.05 60H 3/4" VAREO 1m

Comp. 95056

G103, G104, G105, G106, G107, G108, G10X, G114, G 115, G117, G120SD, G120SW, G121, G122, G125, G130, G132, G133V, G135V, G13X, G140SW, G152, G167, G170, G175V, G6.200, G6.210, G60, G7.220, G7.240, G70, G71, G8.260, G8.270, G84,

REF.191E

UNION CADENA REFORZADA 19.05

Comp. 95057

G103, G104, G105, G106, G107, G108, G10X, G114, G 115, G117, G120SD, G120SW, G121, G122, G125, G130, G132, G133V, G135V, G13X, G140SW, G152, G167, G170, G175V, G6.200, G6.210, G60, G7.220, G7.240, G70, G71, G8.260, G8.270, G84,

REF.191F

MEDIO ESLABON CADENA REFORZADA 19.05

Comp. 95058

G103, G104, G105, G106, G107, G108, G10X, G114, G 115, G117, G120SD, G120SW, G121, G122, G125, G130, G132, G133V, G135V, G13X, G140SW, G152, G167, G170, G175V, G6.200, G6.210, G60, G7.220, G7.240, G70, G71, G8.260, G8.270, G84,

REF.176A

SENSOR VEL. INDUCTIVO. PNP M12 CONECTOR M12

Comp. 168115

G 103, G 104, G 105, G 106, G 107, G 108, G 10X, G 114, G 115, G 117, G 120 SD, G 120SW, G 121, G 122, G 125, G 130, G 132, G 133V, G 135 V, G 13X, G 140SW, G 152, G 167, G 170, G 175V, G 6.200, G 6.210, G 60, G 7.220, G 7.240, G 70, G 71, G 8.260, G

REF.178B

FILTRO COMBUSTIBLE

Comp. 216252

G7.230

REF.178C

FILTRO COMBUSTIBLE

Comp. 170201

G8.260, G7.240, G9.320

REF.178D

PRE - FILTRO COMBUSTIBLE

Comp. 216251

G7.230

REF.178E

PRE - FILTRO COMBUSTIBLE

Comp. 216177

G8.260, G7.240

REF.178F

FILTRO ACEITE

Comp. 216191

G7.230

REF.178G

FILTRO ACEITE

Comp. 170199

G8.260, G7.240, G9.320

REF.178H

FILTRO HIDRÁULICO

Comp. 170203

G7.230, G8.260, 7.240, G9.320

REF.178I

FILTRO HIDRÁULICO

Comp. 170055

G8.260, G7.240, G9.320

REF.178J

FILTRO AIRE EXTERIOR

Comp. 215466, 170120

G7.230, G8.260, G8.320

REF.178K

FILTRO AIRE INTERIOR

Comp. 215467, 170121

G7.230, G8.260

REF.178L

FILTRO AIRE EXTERIOR

Comp. 170141

G7.230, G8.260, G8.321

REF.178M

FILTRO AIRE INTERIOR

Comp. 170140

G7.240, G9.320

Todas las marcas comerciales pertenecen a sus respectivos propietarios y su uso es solo informativo.

IVA no incluido

Compruebe las Ref. antes.

WWW.EDUARDOREPUESTOSAGRICOLAS.COM

Transporte EU gratuito en pedidos 600€

PELLENC COMPATIBLE

EDUARDO

REF.307B

SACUDIDOR STD

Comp. 38602

SERIE 3000, 4000

REF.309B

BRAZO SACUDIDOR GR/LM 05

Comp. 38603

SERIE 3000, 4000

REF.329B

SACUDIDOR OPTIMUM 1162M

Comp. 114026

OPTIMUM

REF.308B

SACUDIDOR 8000 1030MM

Comp. 71772

8015, 8030, 8035, 8050, 8070, 8090

REF.367F

SACUDIDOR"STD"

Comp. 72836

SERIE 3000, 4000

REF.367G

SACUDIDOR GR

Comp. 38603

SERIE 3000, 4000

REF.367J

SACUDIDOR OPTIMUM

Comp. 125000

OPTIMUM, GRAPE´S LINE

REF.367K

¡ NUEVO !

SACUDIDOR OPTIMUM CEPAS GRUESAS

Comp. 225000

SERIE 8000, OPTIMUM, GRAPE´S LINE

REF.331C

SACUDIDOR GUIA PALO SUPERIOR

Comp. 114214

OPTIMUM

REF.331A

SACUDIDOR GUIA PALO SUPERIOR

Comp. 80847

SERIE 3000

REF.331B

¡ NUEVO !

SACUDIDOR GUIA PALO SUPERIOR

Comp. 111346

SERIE 8000, GRAPE´S LINE, OPTIMUM L4, L6

REF.383A

SACUDIDOR CURVADO DE ALTA RESISTENCIA

Comp. -

SERIE 3000, 4000, OPTIMUM

REF.301D

ESCAMA PLANA DERECHA

Comp. 18313

SERIE 3000, 4000

REF.302D

ESCAMA PLANA IZQDA

Comp. 18311

ESCAMA PLANA DERECHA

REF.303D

ESCAMA CON UNION DERECHA

Comp. 64866

SERIE 3000, 4000, 8000

REF.304D

ESCAMA CON UNION IZQDA

Comp. 64868

SERIE 3000, 4000, 8001

REF.305D

CODO IZQUIERDO

Comp. 64865

SERIE 3000, 4000, 8002

REF.306D

CODO DERECHO

Comp. 64864

SERIE 3000, 4000, 8003

REF.315D

CODO IZQUIERDO OPTIMUM

111850

SERIE 8000, OPTIMUM, GRAPE´S LINE

REF.316D

CODO DERECHO OPTIMUM

Comp. 111851

SERIE 8000, OPTIMUM, GRAPE´S LINE

Todas las marcas comerciales pertenecen a sus respectivos propietarios y su uso es solo informativo.

Compruebe las Ref. antes.

WWW.EDUARDOREPUESTOSAGRICOLAS.COM

IVA no incluido

Transporte EU gratuito en pedidos 600€

PELLENC COMPATIBLE

EDUARDO

REF.317D

ESCAMA OPTIMUM IZQUIERDA

Comp. 125435

SERIE 8000, OPTIMUM

REF.318D

ESCAMA OPTIMUM DERECHA

Comp. 125437

SERIE 8000, OPTIMUM

REF.332A

PLACA DISTANCIADORA ESCAMA OPTIMUM

Comp. 120856

SERIE 8000, OPTIMUM, GRAPE´S LINE

REF.333A*

TORNILLOS-INSERTO-ARANDELA ESCAMA OPTIMUM

Comp. 133642,02913,133636

SERIE 8000, OPTIMUM, GRAPE´S LINE

REF.336A

CHAPITA UNIÓN CODO OPTIMUM A CHASIS

Comp. 125455

SERIE 8000, OPTIMUM, GRAPE´S LINE

REF.312B

¡ NUEVO !

SILENT BLOCK SACUDIDOR CEPAS GRUESAS (12X40X40)

Comp. 162500

OPTIMUM, GRAPE´S LINE

REF.379F

CODO ESCAMA INYECTADA BLANCA

Comp. -

SERIE 8000, OPTIMUM, GRAPE´S LINE

REF.379D

INSERTO DOBLE ROSCADO PARA ESCAMAS INYECTADAS

Comp. 134795

SERIE 8000, OPTIMUM, GRAPE´S LINE

REF.350A

PATIN HORIZONTAL

Comp. 107148

SERIE 8000, OPTIMUM, GRAPE´S LINE

REF.349A

PATÍN GIRO DESCENDENTE DERECHO TDR2-4-5

Comp. 107147

SERIE 8000, OPTIMUM, GRAPE´S LINE

REF.349B

PATÍN GIRO DESCENDENTE IZQUIERDO TDR2-4-5

Comp. 108604

SERIE 8000, OPTIMUM, GRAPE´S LINE

REF.350B

KIT PATIN

Comp. 39F1086

2u REF.349A + 2u REF349B + 4u REF350A + 12 +12

REF.379E

TORNILLO TH SIN BORDON M8-30 CL8,8

Comp. 139094

SERIE 8000, OPTIMUM, GRAPE´S LINE

REF.379C

SUJECCIÓN CONTRACHAPADA ESCAMA BLANCA

Comp. 137242

SERIE 8000, OPTIMUM, GRAPE´S LINE

REF.310A

PINZA TERMINAL BRAZO SACUDIDOR

Comp. 37488

SERIE 3000, 4000, OPTIMUM

REF.311A

INMOVILIZADOR SILENTBLOCK TERMINAL PINZA

Comp. 49603

SERIE 3000, 4000, 8000, OPTIMUM, GRAPE´S LINE

REF.312A

SILENT BLOCK PARA SACUDIDOR (14X30X42)

Comp. 67007

SERIE 3000, 4000, 8000, OPTIMUM, GRAPE´S LINE

REF.313A

KIT COMPLETO PARA SACUDIDOR

Comp. 38604

SERIE 3000, 4000, OPTIMUM,

REF.314A

KIT 2 TORNILLOS 8.8 M8X40+ 2TUERCAS autoblocante esp.

Comp. -

SERIE 3000, 4000, OPTIMUM

REF.346A*

SILENT BLOCK ESCAMA PLANA

Comp. 32517

SERIE 3000, 4000

IVA no incluido

Transporte EU gratuito en pedidos 600€

Todas las marcas comerciales pertenecen a sus respectivos propietarios y su uso es solo informativo.

WWW.EDUARDOREPUESTOSAGRICOLAS.COM

Compruebe las Ref. antes.

PELLENC COMPATIBLE

EDUARDO

REF.344A

TUERCA DE SEGURIDAD OVALADA M8 (para manguito)

Comp. 50346

SERIE 3000, 4000, 8000, OPTIMUM, GRAPE´S LINE

REF.344B

TUERCA DE SEGURIDAD OVALADA M12 (para Silentblock)

Comp. 34888

SERIE 3000, 4000, 8000, OPTIMUM, GRAPE´S LINE

REF.334A

SILENT BLOCK PARA SACUDIDOR SIN EJE (14X30X42)

Comp. 04779

SERIE 3000, 4000, 8000, OPTIMUM, GRAPE´S LINE

REF.345C

¡ NUEVO !

KIT PARA SACUDIDORES INYECTABLES 2 TORNILLOS M8X60 8.8 + 2 TUERCAS M8 + 2 ARANDELAS

Comp. 13006,50346,08112

SERIE 3000, 4000, 8000, OPTIMUM, GRAPE´S LINE

REF.342C

SIN TRANSPORTE

CINTA 250 (sin grapa) 1m

Comp. -

SERIE 3000, 4000, 8000, OPTIMUM

REF.342H

SIN TRANSPORTE

CINTA 250 (sin grapa) 11m

Comp. -

SERIE 3000, 4000, 8000, OPTIMUM

REF.342D

SIN TRANSPORTE

CINTA 310 (sin grapa) 1m

Comp. -

SERIE 3000, 4000, 8000, OPTIMUM

REF.342I

SIN TRANSPORTE

CINTA 310 (sin grapa) 11m

Comp. -

SERIE 3000, 4000, 8000, OPTIMUM

REF.340F

GRAPA acero inoxidable para 250mm clavos de cobre

Comp. -

SERIE 3000, 4000, OPTIMUM

REF.340G

GRAPA acero inoxidable para 310mm clavos de cobre

Comp. -

SERIE 3000, 4000, OPTIMUM

REF.145C

GUIA CINTAINOX. 250 3 mm diámetro

Comp. -

SERIE 3000, 4000, 8000, OPTIMUM

REF.145D

GUIA CINTA INOX. 310 3 mm diámetro

Comp. -

SERIE 3000, 4000, 8000, OPTIMUM

REF.339L

UNIÓN inox para clavos de cobre (250mm)

Comp. -

SERIE 3000, 4000, OPTIMUM

REF.339M

UNIÓN inox para clavos de cobre (310mm)

Comp. -

SERIE 3000, 4000, OPTIMUM

REF.390A

¡ NUEVO !

SALIDA VENTILADORES

Comp. 43941

SERIE 3000, 4000, 8000, OPTIMUM, GRAPE´S LINE

REF.390D

¡ NUEVO !

LONA 3 CAPAS GRIS M2

Comp. -

SERIE 3000, 4000, 8000, OPTIMUM, GRAPE´S LINE

REF.339P

UNIÓN RS125 inox para grapas(250mm)

Comp. -

SERIE 3000, 4000, OPTIMUM

REF.339Q

UNIÓN RS125 inox para grapas(310mm)

Comp. -

SERIE 3000, 4000, OPTIMUM

REF.351C

CLAVOS DE COBRE CON PUNTA (diám 2,1x17 mm)

Comp. -

SERIE 3000, 4000, 8000, OPTIMUM, GRAPE´S LINE

REF.343A

RASCADOR POLEA

Comp. 11290

SERIE 3000, 4000, 8000, OPTIMUM

Todas las marcas comerciales pertenecen a sus respectivos propietarios y su uso es solo informativo.

Compruebe las Ref. antes.

WWW.EDUARDOREPUESTOSAGRICOLAS.COM

IVA no incluido

Transporte EU gratuito en pedidos 600€

PELLENC COMPATIBLE

EDUARDO

REF.319A

RODILLO INFERIOR LISO 250mm

Comp. 49620

SERIE 3000, 4000, OPTIMUM

REF.320A

RODILLO MOTOR ABOMBADO 250mm

Comp. 84573

SERIE 3000, 4000, OPTIMUM

REF.321A

RODILLO LISO 310mm

Comp. 49616

SERIE 3000, 4000, OPTIMUM

REF.322A

RODILLO MOTOR ABOMBADO 310mm

Comp. 84572

SERIE 3000, 4000, OPTIMUM

REF.888A

RODAMIENTO RODILLOS TRANSPORTADOR (LARGO GRR25)

Comp. 37508

SERIE 3000, 4000, 8000, OPTIMUM

REF.889A

RETEN DE RODAMIENTO PARA RODILLO 41,6-25,5-0,5

Comp. 79417, 01161

SERIE 3000, 4000, 8000, OPTIMUM

REF.341A

SOPORTE DE PARADA INOX CINTA 250MM

Comp. -

SERIE 3000, 4000, OPTIMUM

REF.341B

SOPORTE DE PARADA INOX CINTA 310MM

Comp. -

SERIE 3000, 4000, 8000

REF.378A

SOPORTE SACUDIDOR DELANTERO

Comp. 16063

SERIE 3000, 4000, 8000, OPTIMUM

REF.378B

SOPORTE SACUDIDOR TRASERO 2000

Comp. 16064

SERIE 3000, 4000, 8000, OPTIMUM

REF.378C

BRIDA DE FIJACIÓN SOPORTE SACUD

Comp. 16064

SERIE 3000, 4000, 8000, OPTIMUM

REF.378E

TORNILLO BRIDAS-SOPORTE M12 CL10

Comp. 46295

SERIE 3000, 4000, 8000, OPTIMUM

REF.335A

RODILLO GUIADO COMPLETO diam 76mm

Comp. 46291

SERIE 3000, 4000, OPTIMUM

REF.335B

RODILLO GUIADO COMPLETO diam 88mm

Comp. 64816

SERIE 3000, 4000, OPTIMUM

REF.335C

RODILLO GUIADO CINTA SIN RODAMIENTOS Y SIN EJE Ø76

Comp. 46290

SERIE 3000, 4000, OPTIMUM

REF.335D

RODILLO DEL TRANSPORTADOR Ø69/88

Comp. 62838

SERIE 3000, 4000, OPTIMUM

REF.355A

EJE RODILLO GUIADO CINTA

Comp. 42005

SERIE 3000, 4000, OPTIMUM

REF.353A

COJINETE NYLON Ø30-31

Comp. 37603, 66137

SERIE 3000, 4000, OPTIMUM

REF.354A

DEFLECTOR IZQ. RODILLO CINTA

Comp. 11237

SERIE 3000, 4000, OPTIMUM

REF.354B

DEFLECTOR DCH. RODILLO GUIADO CINTA

Comp. 11236

SERIE 3000, 4000, OPTIMUM

IVA no incluido

Transporte EU gratuito en pedidos 600€

Todas las marcas comerciales pertenecen a sus respectivos propietarios y su uso es solo informativo.

Compruebe las Ref. antes.

PELLENC COMPATIBLE

EDUARDO

REF.358A*

COPELA 130/30*2 RODILLO LISO

Comp. 11208

SERIE 3000, 4000, 8000, OPTIMUM

REF.359A*

POLEA GUIADO CINTA 2005 PVC

Comp. 49615, 45813

SERIE 3000, 4000, OPTIMUM

REF.391E

¡ NUEVO !

ALAMBRE

Comp. 12803

SERIE 3000, 4000, 8000, OPTIMUM

REF.391C

¡ NUEVO !

TAPON DE VACIADO

Comp. 11351

SERIE 3000, 4000, 8000, OPTIMUM, GRAPE´S LINE

REF.396A

BLANCA IZQUIERDA

REF.396B

BLANCA DERECHA

REF.364A

SOPORTE SUP. DE ÁRBOL TRASERO STD Y SUPERIOR ÁRBOLES GR

Comp. 01106

SERIE 3000, 4000, OPTIMUM

REF.365A

SOPORTE INF. Y SUP. DE ÁRBOL DELANTERO STD

Comp. 01099

SERIE 3000, 4000, OPTIMUM

REF.365B*

COJINETE DE SACUDIDA POST. BAJO

Comp. 12544

SERIE 3000, 4000, 8000, OPTIMUM, GRAPE´S LINE

REF.374A

SILENTBLOCK D=100 H=30 60SH (EXCENTRICO MAV)

Comp. 16015

SERIE 3000, 4000, 8000, OPTIMUM, GRAPE´S LINE

REF.374B*

SILENTBLOCK 70SH

Comp. 69847

8070, 8090, SERIE 4000

REF.374C*

SILENTBLOCK HEXAGONAL H28 M8x20 35SHA

Comp. 80486

SERIE 3000, 4000, 8000, OPTIMUM

REF.330A

BABERO DELANTERO STD

Comp. 31961

SERIE 3000, 4000, 8000

REF.330B

BABERO DELANTERO OPTIMUM

Comp. 107463 / 107464

8015,8030, 8035, OPTIMUM, GRAPE´S LINE

REF.888B

RODAMIENTO SOPORTE INF. Y SUP. DE ÁRBOL DELANTERO STD Ø35

Comp. 03489

SERIE 3000, 4000, OPTIMUM

REF.346D

SILENTBLOCK ÚLTIMA ESCAMA 05

Comp. 37304

SERIE 3000, 4000, OPTIMUM

REF.330D

¡ NUEVO !

BABERO DELANTERO GR

Comp. 32976

GR, SERIE 4000

REF.330E

¡ NUEVO !

BABERO DELANTERO NUEVO

Comp. 142783 / 142784

9056, OPTIMUM, GRAPES LINES

REF.330C

BABERO DELANTERO9056

Comp. 35186

9056, OPTIMUM, GRAPES LINES

REF.330F

¡ NUEVO !

BABERO DELANTERO 8090,8070,8050

Comp. 70691 / 70692

8090,8070,8050

Todas las marcas comerciales pertenecen a sus respectivos propietarios y su uso es solo informativo.

Compruebe las Ref. antes.

WWW.EDUARDOREPUESTOSAGRICOLAS.COM

IVA no incluido

Transporte EU gratuito en pedidos 600€

PELLENC COMPATIBLE

EDUARDO

REF.351A

CHAPITA UNIÓN CODO OPTIMUM A CHASIS

Comp. 111865

SERIE 4000, 8000, OPTIMUM

REF.351B

CHAPITA IZQUIERDA UNIÓN CODO OPTIMUM A CHASIS

Comp. 111866

SERIE 4000, 8000, OPTIMUM

REF.354C

¡ NUEVO !

PATIN HORIZONTAL

Comp. 105380

SERIE 8000, OPTIMUM, GRAPE´S LINE

REF.392E*

¡ NUEVO !

ARBOL DE POLEA TRANSPORTADOR

Comp. 11278

SERIE 3000, 4000, 8000, OPTIMUM

REF.345B

TUERCA CAUTIVA TIPO CLIP M8x5

Comp. 65078

SERIE 3000, 4000, 8000, OPTIMUM, GRAPES`LINE

REF.391F

¡ NUEVO !

CASQUILLO SINFÍN

Comp. 12803

SERIE 3000, 4000, 8000, OPTIMUM, GRAPES`LINE

REF.371D

¡ NUEVO !

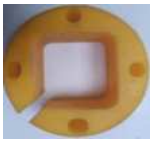

MANGUITO COJINETE

Comp. 63729

SERIE 3000, 4000, 8000, OPTIMUM

REF.371B*

¡ NUEVO !

RODAMIENTO COMPLETO INF. ÁRBOL SAC. 06

Comp. 50179

SERIE 3000, 4000, 8000, OPTIMUM

REF.358B*

¡ NUEVO !

PLATILLO INOX PARA ENGRASADOR

Comp. 06758

SERIE 3000, 4000, 8000, OPTIMUM

REF.358C*

¡ NUEVO !

PLATILLO INOX SIN ENGRASADOR

Comp. 24849

SERIE 3000, 4000, 8000, OPTIMUM

REF.397B*

¡ NUEVO !

POTENCIOMETRO CABLE 5V SMART 2012

Comp. 102728

SERIE 3000, 4000, 8000, OPTIMUM

REF.397A*

¡ NUEVO !

CAJA TEST SMART

Comp. 00086

SERIE 3000, 4000, 8000, OPTIMUM, GRAPES`LINE

REF.334B

¡ NUEVO !

SILENT-BLOC 50X50 SINFIN

Comp. 108698

SERIE 3000, 4000, 8000, OPTIMUM, GRAPE´S LINE

REF.391D*

¡ NUEVO !

CONJUNTO PIÑÓN MOTOR BANDA INOX

Comp. 104530

SERIE 8000, OPTIMUM, GRAPE´S LINE

REF.570Q

¡ NUEVO !

COJINETE EJES Ø25 1 CUELLO

Comp. -

REF.391B*

¡ NUEVO !

RODILLO PIÑON TRANSPORTADOR

Comp. 113060

SERIE 8000, OPTIMUM, GRAPE´S LINE

REF.390B

¡ NUEVO !

LONA DELANTERA AUTOPROPULSADA

Comp. 44056

SERIE 3000, 4000, 8000, OPTIMUM, GRAPE´S LINE

REF.398A

¡ NUEVO !

CUÑA ESCAMAS

Comp. 72995

SERIE 3000, 4000, 8000, OPTIMUM, GRAPE´S LINE

REF.389A

¡ NUEVO !

TACO ADAPTADOR COLUMNA DIAM 35X50

Comp. 138676

SERIE 8000, OPTIMUM, GRAPE´S LINE

REF.389B

¡ NUEVO !

PATÍN SUPERIOR TRANSPORTE MAV

Comp. 18821

SERIE 8000, OPTIMUM, GRAPE´S LINE

Compruebe las Ref. antes.

Todas las marcas comerciales pertenecen a sus respectivos propietarios y su uso es solo informativo.

WWW.EDUARDOREPUESTOSAGRICOLAS.COM

IVA no incluido

Transporte EU gratuito en pedidos 600€

GRAPE´S LINE, STD

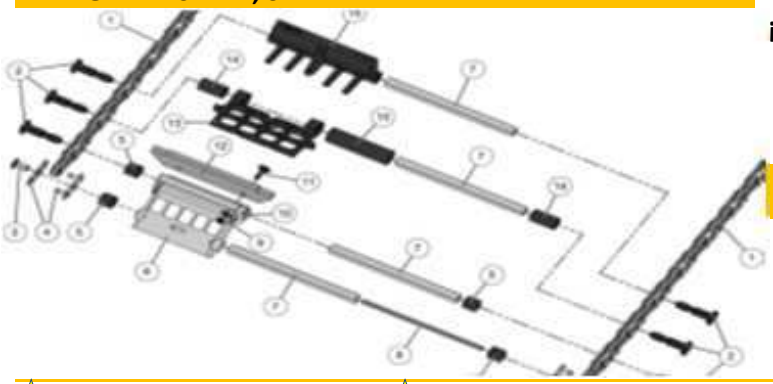

REF.384A
¡ NUEVO !

Nº1 CADENA RODILLO_PAS, ml

Comp. -

SERIE 8000, OPTIMUM, GRAPE´S LINE

REF.384B
¡ NUEVO !

Nº2 CONJ TAPÓN EXPANSIVO CINTA 2013

Comp. 111192

SERIE 8000, OPTIMUM, GRAPE´S LINE

REF.384M
¡ NUEVO !

Nº14 PIVOTE PALETA CADENA 43mm

Comp. 101905

SERIE 8000, OPTIMUM, GRAPE´S LINE

REF.384N
¡ NUEVO !

Nº15 PARADA PALETA STD 112mm

Comp. 102135

SERIE 8000, OPTIMUM, GRAPE´S LINE

REF.384C
¡ NUEVO !

Nº3 TAPÓN CIERRE

Comp. 111117

SERIE 8000, OPTIMUM, GRAPE´S LINE

REF.384D
¡ NUEVO !

Nº4 ENGANCHE RÁPIDO

Comp. 111116,131074

SERIE 8000, OPTIMUM, GRAPE´S LINE

REF.384E
¡ NUEVO !

Nº5 PIVOTE ARIETE 22mm

Comp. 109919,105739

SERIE 8000, OPTIMUM, GRAPE´S LINE

REF.384F

0

Comp. 120261

SERIE 8000, OPTIMUM, GRAPE´S LINE

REF.384G
¡ NUEVO !

Nº7 VARILLA CUADRADA 238mm

Comp. 111190

SERIE 8000, OPTIMUM, GRAPE´S LINE

REF.384H
¡ NUEVO !

Nº8 TIRANTE CIERRE CINTA 225mm

Comp. 105513

SERIE 8000, OPTIMUM, GRAPE´S LINE

REF.384J

Nº9,10,11 TORNILLO, ARANDELA TUERCA

Comp. 08188,08112,51538

SERIE 8000, OPTIMUM, GRAPE´S LINE

REF.384K
¡ NUEVO !

Nº12 PLACA DE DESGASTE ARIETE STD

Comp. 109835

SERIE 8000, OPTIMUM, GRAPE´S LINE

REF.384L
¡ NUEVO !

Nº13 PALETA 21X30

Comp. 101903

SERIE 8000, OPTIMUM, GRAPE´S LINE

REF.388A
¡ NUEVO !

ARBOL ALTO STD CUADRADO 15

Comp. 85088

OPTIMUM, GRAPE´S LINE

REF.384P
¡ NUEVO !

Nº16 ARBOL BAJO STD CUADRADO 15

Comp. 102761

SERIE 8000, GRAPE´S LINE

REF.384R

KIT 2 CINTAS TRANSPORTADORAS 8015, 8030, 8035, GL20,GL25, GL40, GL45

Comp. 39F1310

62 ref.384P + 62 ref.384L

(10,39M)

REF.384S

KIT 2 CINTAS TRANSPORTADORAS 8050,8090

Comp. -

65 ref.384P + 65 ref.384L

(10,88M)

REF.388B

KIT2 CINTAS OPTIMUM CABEZAL L (L4,L6, easy smart ,esy collect, GL60,80)

Comp. 39F1313

70 ref.384L + 70 ref.388A

(11,38M)

Todas las marcas comerciales pertenecen a sus respectivos propietarios y su uso es solo informativo.

PELLENC COMPATIBLE

EDUARDO

EASY SMART XL, GR

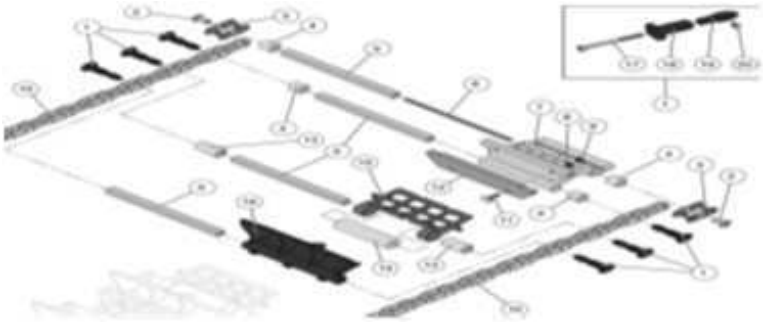

REF.385A
¡ NUEVO !

Nº1 CADENA RODILLO_PAS, ml

Comp. -
SERIE 8000, OPTIMUM, GRAPE´S LINE

REF.385B
¡ NUEVO !

Nº1 CONJ TAPÓN EXPANSIVO CINTA 2013

Comp. 111192
SERIE 8000, OPTIMUM, GRAPE´S LINE

REF.361A*

PALETA SEPARADOR DE HOJAS STD

Comp. 20684
SERIE 3000, 4000

REF.361B*

PALETA SEPARADOR DE HOJAS GR

Comp. 29339
SERIE 3000, 4000

REF.385C
¡ NUEVO !

Nº2 TAPÓN CIERRE

Comp. 111117
SERIE 8000, OPTIMUM, GRAPE´S LINE

REF.385D
¡ NUEVO !

Nº3 ENGANCHE RÁPIDO

Comp. 111116,131074
SERIE 8000, OPTIMUM, GRAPE´S LINE

REF.385E
¡ NUEVO !

Nº4 PIVOTE ARIETE 22mm

Comp. 109919,105739
SERIE 8000, OPTIMUM, GRAPE´S LINE

REF.385F
¡ NUEVO !

Nº5 TUBO CIERRE CINTA RODILLO 309mm

Comp. 111212
SERIE 8000, OPTIMUM, GRAPE´S LINE

REF.385G
¡ NUEVO !

Nº6 TIRANTE CIERRE GR 288mm

Comp. 105592
SERIE 8000, OPTIMUM, GRAPE´S LINE

REF.385H

Nº7 KIT ARIETE

Comp. 120479,120321
SERIE 8000, OPTIMUM, GRAPE´S LINE

REF.385J

Nº8,9,11 TORNILLO, ARANDELA TUERCA

Comp. 08112,08188,60856
SERIE 8000, OPTIMUM, GRAPE´S LINE

REF.385K
¡ NUEVO !

Nº12 PLACA DE DESGASTE ARIETE GR

Comp. 109778
SERIE 8000, OPTIMUM, GRAPE´S LINE

REF.385L
¡ NUEVO !

Nº13 PIVOTE PALETA CADENA 43mm

Comp. 101905,120123
SERIE 8000, OPTIMUM, GRAPE´S LINE

REF.385M
¡ NUEVO !

Nº14 PARADA PALETA GR 178mm

Comp. 105409
SERIE 8000, OPTIMUM, GRAPE´S LINE

REF.385N
¡ NUEVO !

Nº15 PALETA GR 21X30

Comp. 102134
OPTIMUM

REF.385P
¡ NUEVO !

Nº16 ARBOL ALTO CUADRADO 15

Comp. 87364
OPTIMUM

REF.385R

KIT 2 CINTAS OPTIMUM CABEZAL XL

Comp. 39F1308
73 ref.385N + 73 ref.385P
(12,21M)

REF.380A*

PINTURA NARANJA AEROSOL 0,4L

Comp. 1640055
SERIE 3000, 4000, 8000, OPTIMUM, GRAPE´S LINE

Transporte EU gratuito en pedidos 600€

Todas las marcas comerciales pertenecen a sus respectivos propietarios y su uso es solo informativo.

WWW.EDUARDOREPUESTOSAGRICOLAS.COM

Compruebe las Ref. antes.

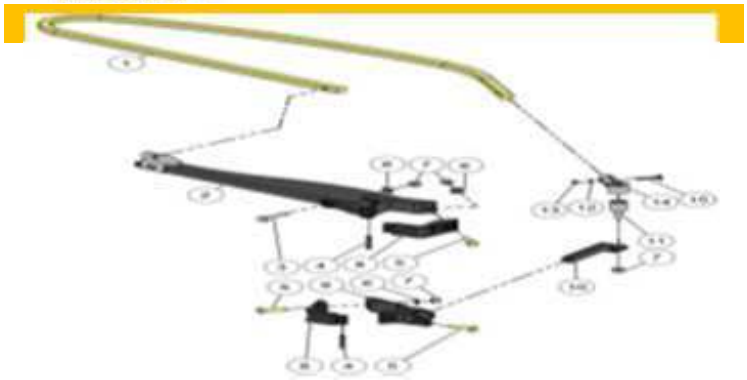

REF.386N
¡ NUEVO !

Nº2 BRAZO OPTIMUM

Comp. 150282
OPTIMUM

REF.371A*

Nº2 BRAZO OPTIMUM

Comp. 23825
SERIE 3000

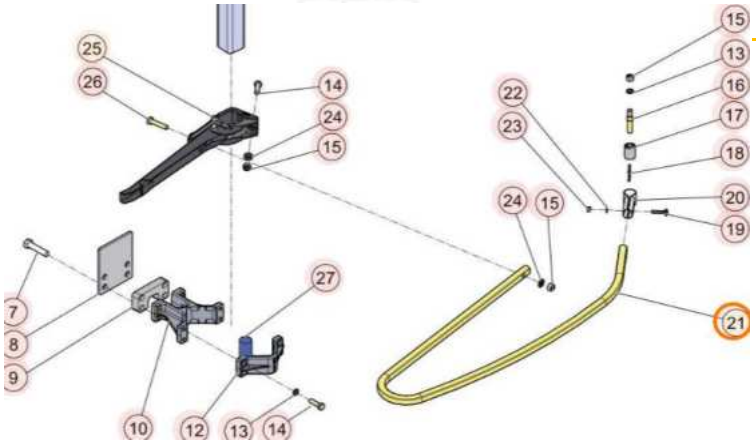

REF.386P
¡ NUEVO !

BRAZO 80XX

Comp. 107465
SERIE 8000

REF.371C*
¡ NUEVO !

PALPADOR ILS GUIADO

Comp. 68877
SERIE 3000, 4000, 8000, OPTIMUM, GRAPE´S LINE

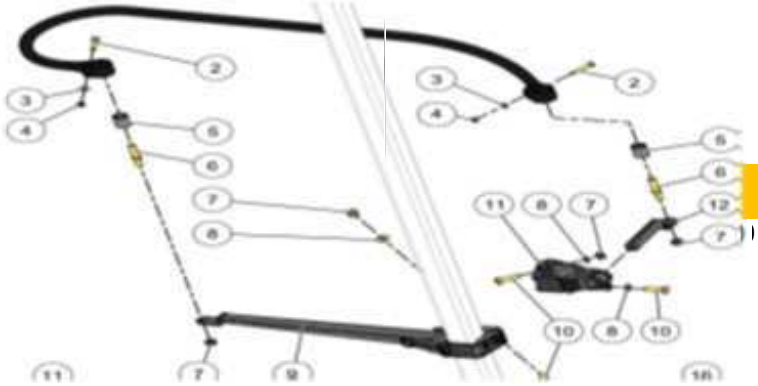

REF.387Q
¡ NUEVO !

Nº9 SOPORTE TRASERO SACUDIDOR

Comp. 132150
OPTIMUM, GRAPE´S LINE

REF.371E*
¡ NUEVO !

PALPADOR DE ALTURA

Comp. 64292
SERIE 3000, 4000, 8000, OPTIMUM, GRAPE´S LINE

REF.386G

TORNILLO 30, ARANDELA, TUERCA M12

Comp. -
OPTIMUM

REF.386H
¡ NUEVO !

CONTRABRIDA SOPORTE SACUDIDOR

Comp. 69051
SERIE 8000, OPTIMUM, GRAPE´S LINE

REF.386B*

Nº8, 9 y 4 CONJUNTO CONTRABRIDA SOPORTE SACUDIDOR

Comp. 70628
SERIE 8000, OPTIMUM, GRAPE´S LINE

REF.386C

Nº10 SOPORTE DELANTERO BRAZO

Comp. 75682
SERIE 8000, OPTIMUM, GRAPE´S LINE

REF.387C

Nº3,6,7 TORNILLO 40, ARANDELA, TUERCA M12

Comp. 14788,47069,115252
SERIE 8000, OPTIMUM

REF.386D

Nº3,6,7 TORNILLO 55, ARANDELA, TUERCA M12

Comp. 115251,47069,115252
OPTIMUM

REF.382A

PLACA 2mm

Comp. -
SERIE 8000, OPTIMUM, GRAPE´S LINE

REF.382B

PLACA 4mm

Comp. -
SERIE 8000, OPTIMUM, GRAPE´S LINE

Todas las marcas comerciales pertenecen a sus respectivos propietarios y su uso es solo informativo.

PELLENC COMPATIBLE

EDUARDO

EASY SMART L

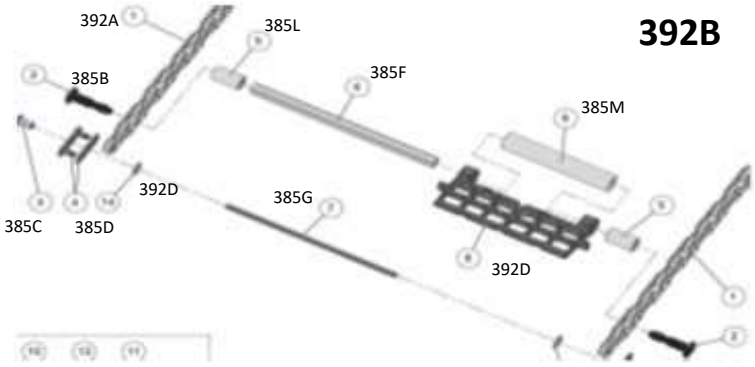

REF.392A

CADENA 1780 MM

Comp. 111213

EASY SMART L

REF.392B

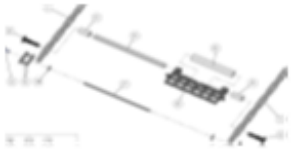

CINTA V3 CV PP21-30 314X85X1821_22M

Comp. 138107

22 u. REF.392C

EASY SMART XL, EASY COLLECT L

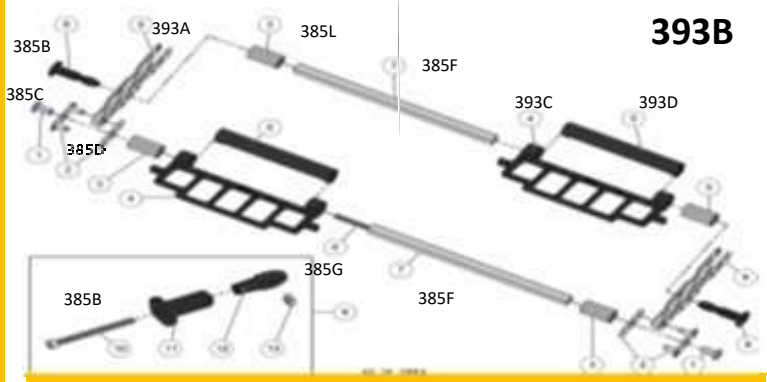

REF.385N

N°15 PALETA GR 21X30

Comp. 102134

OPTIMUM

REF.392D*

¡ NUEVO !

ARANDELA DE AJUSTE BELIER

Comp. 112012

EASY SMART L

EASY SMART LSP2, XLSP2, XLESP2

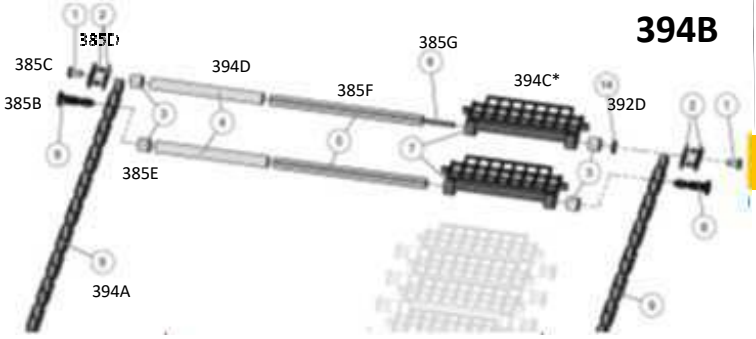

REF.393A

CADENA 2101 MM

Comp. 121302

EASY SMART XL, EASY COLLECT L

REF.393B

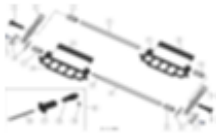

CINTA V3 CV PP35-50 314X85X2463_26M

Comp. 121302

22 u. REF393C

REF.395A

¡ NUEVO !

CUCHILLA DERECHA

Comp. 64926

SERIE 3000, SERIE 8000, OPTIMUM, GRAPE´S LINE

REF.395B

¡ NUEVO !

CUCHILLA IZQUIERDA

Comp. 64927

SERIE 3000, SERIE 8000, OPTIMUM, GRAPE´S LINE

REF.393C*

PALETA SEPARADOR 50X35 CINTA

Comp. 123526

EASY SMART XL, EASY COLLECT L

REF.393D*

TUBO 50X35 CINTA

Comp. 123602

EASY SMART XL, EASY COLLECT L

REF.394C*

PALETA 21x21 - SPW2013

Comp. 105737

EASY SMART LSP2, XLSP2, XLESP4

REF.394D*

TUBO D.22 LG230 SPW 2013

Comp. 105745

EASY SMART LSP2, XLSP2, XLESP5

REF.394A

CADENA 2939 MM

Comp. 138125

EASY SMART LSP2, XLSP2, XLESP2

REF.394B

CINTA V3 CV PP21-21

Comp. 138106

36 u. REF394C

Compruebe las Ref. antes.

Todas las marcas comerciales pertenecen a sus respectivos propietarios y su uso es solo informativo.

WWW.EDUARDOREPUESTOSAGRICOLAS.COM

IVA no incluido

Transporte EU gratuito en pedidos 600€

Origen *Burgos*
Destino *el mundo*

Queda totalmente prohibida la reproducción total o parcial de este catálogo, incluidos textos, dibujos y fotografías, así como su conservación en cualquier medio o su transmisión en cualquier forma o por cualquier medio digital, mecánico, fotocopiado, escaneo o cualquier otro medio sin autorización previa y por escrito.

Las imágenes utilizadas son solo para fines ilustrativos y pueden diferir de los modelos originales.

Todos los nombres de productos, logotipos y marcas son propiedad de sus respectivos propietarios. Todos los nombres de empresas, productos y servicios utilizados en esta página web se utilizan únicamente con fines identificativos. El uso de estos nombres, logotipos y marcas no implica ningún tipo de aprobación.

La información contenida en este catálogo se puede cambiar sin previo aviso.

Copyright © 2022

EDUARDO REPUESTOS AGRÍCOLAS

MOLDES Y RESINAS, S.L.
Calle López Bravo 24-26, nave 26
Polígono Villalonquéjar
09001 Burgos, España

Tel. +34 606 39 41 29
ot@eduardorepuestosagricolas.com
www.eduardorepuestosagricolas.com

NEW HOLLAND | GREGOIRE | PELLENC