EDUARDO

RICAMBI COMPATIBILI PER VENDEMMIATRICI

10 ANNI
2012-2022
AL TUO FIANCO

NEW HOLLAND COMPATIBLE

GREGOIRE COMPATIBLE

PELLENC COMPATIBLE

WWW.EDUARDOREPUESTOSAGRICOLAS.COM

ÍNDICE

EDUARDO REPUESTOS AGRÍCOLAS 3

NEW HOLLAND (original y compatible) 6

GREGOIRE (original y compatible) 28

PELLENC (original y compatible) 38

RISPOSTA AD UNA NECESSITÀ

I nostri ricambi compatibili rappresentano **un'alternativa perfettamente valida agli originali.** Offriamo prodotti affidabili, testati individualmente nel nostro laboratorio tecnico ea prezzi molto competitivi. Il nostro **team di tecnici specializzati** studia le mutevoli esigenze del settore per adattarle in ogni momento, migliorandone così le prestazioni grazie al feedback che ci offrono.

Offriamo una **vasta gamma di prodotti e servizi.** Siamo produttori, come produttori di etichette bianche e per altre società e distributori.

Fin dai nostri inizi, l'obiettivo principale è stato quello di ottenere **le stesse parti**, dall'iniezione di parti in plastica, alla realizzazione di nastri trasportatori, lavorazioni meccaniche, tornitura, assemblaggio e, una lunga eccetera di processi.

POSIZIONE PERFETTA

Eduardo Repuestos Agrícolas, appartenente al gruppo *Moldes y Resinas S.L.*, ha iniziato la sua attività nel 2012 per mano di Eduardo Royo e María Rosa Lázaro, che miravano a risolvere **le esigenze scoperte del mercato del vino spagnolo**.

Uno dei fattori che ne ha favorito la rapida crescita è la sua posizione: Burgos, **punto geografico strategico** a metà strada tra la Ribera del Duero e La Rioja, riferimenti enologici. Ciò si traduce in un costante rinnovamento e miglioramento delle tecniche di creazione, lavorazione e produzione dei componenti offerti, nonché uno sguardo rivoluzionario alle **ultime tecniche nel mondo della vite e dell'olivo**.

UN TEAM A TUA DISPOSIZIONE

Eduardo Repuestos Agrícolas è composto da un **team dinamico e deciso**, il cui obiettivo principale è la soddisfazione del cliente.

Dall'ufficio tecnico dell'azienda vengono testati e sviluppati nuovi componenti e prodotti per adattarsi ai ritmi mutevoli del settore. Sulla stessa linea, viene offerto un servizio di progettazione di **soluzioni personalizzate** per soddisfare le esigenze specifiche dei singoli clienti.

L'ampia rete commerciale e distributiva acquisita in questi anni permette, dalla consulenza personale e risoluzione di ogni dubbio, alla ricezione della merce, processo in cui intervengono i diversi componenti del team.

RESPONSABILITÀ E IMPEGNO

Il gruppo cerca di ottenere **la massima qualità, il massimo assortimento e il massimo servizio**, nel più breve tempo possibile.

Velocità, puntualità e impegno sono quindi i pilastri che sostengono questa azienda, considerati essenziali e basilari quando si tratta di gestire e spedire quotidianamente i prodotti.

La filosofia dei lavoratori che compongono *Eduardo Repuestos Agrícolas* risiede nel fornire ai consumatori un maggiore comfort durante gli acquisti, soddisfare le loro esigenze di prodotto aumentando la specializzazione e adeguando il prezzo. In breve, quello che vuoi è **migliorare la vicinanza e la fedeltà del cliente**.

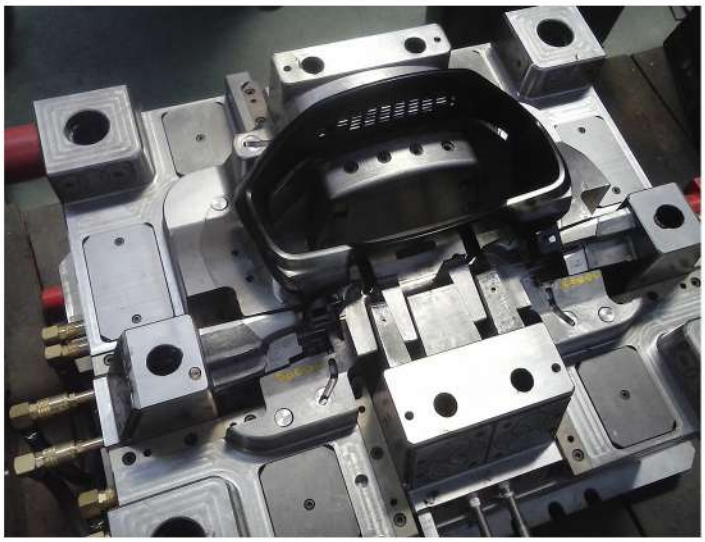

CATALOGO COMPLETO

Una delle caratteristiche principali che differenzia il nostro marchio sul mercato è **che siamo produttori, la maggior parte dei pezzi parte dal nostro laboratorio di progettazione con la scelta dei materiali**, passa attraverso un processo di produzione e culmina con il controllo di qualità.

Offriamo, oltre ad un ampio catalogo di **prodotti di nostra proprietà e compatibili con altri marchi** (*New Holland, Gregoire e Pellenc*), la fornitura di **un'altra serie di prodotti originali**, che siano o meno a catalogo.

I nostri prodotti possono essere acquistati **online o fisicamente** presso le nostre strutture. Prima di ogni dubbio o problema, il nostro ufficio tecnico si adopererà per la sua risoluzione.

NAZIONALE E INTERNAZIONALE

Eduardo Repuestos Agrícolas ha iniziato la sua presenza in Spagna, ma a poco a poco i suoi prodotti hanno raggiunto una **moltitudine di persone provenienti da diverse parti del pianeta**.

L'obiettivo principale di questa internazionalizzazione è che tutti possano godere della qualità e del **buon prezzo dei nostri prodotti**.

Tutto questo grazie alla competenza e alla qualificazione del team, che padroneggia **diversi linguaggi** in modo che il rapporto con il cliente sia ottimale e comprensibile.

Allo stesso modo, è stata presente in alcune delle più importanti fiere agricole ***FIMA, EIMA*** & ***SITEVI***.

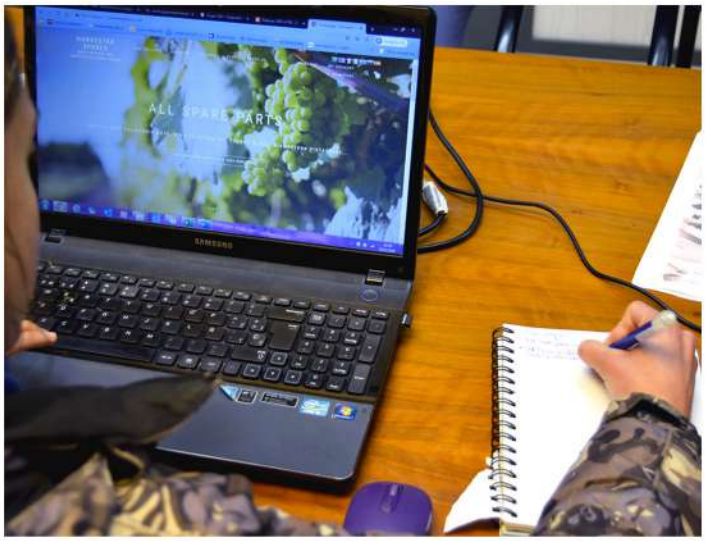

SVILUPPO CONSTANTE

Da *Eduardo Repuestos Agrícolas* guardiamo al futuro con l'obiettivo di consolidarci nei principali mercati mondiali, nonché di espandere i nostri traguardi e obiettivi in progetti futuri e prototipi.

Riteniamo fondamentale l'esperienza di tutti questi anni, così come quel desiderio intrinseco che ci porta a migliorarci quotidianamente ea fornire al cliente ciò di cui ha bisogno.

Ogni anno miglioriamo, ogni anno il nostro catalogo si amplia e si completa, ma tutto questo non sarebbe possibile senza di te, senza quella fiducia che riponi in noi e ci aiuti ad andare un po 'oltre.

Grazie per la tua lealtà e supporto.

~ Eduardo Repuestos Agrícolas

NEW HOLLAND-BRAUD COMPATIBLE

EDUARDO

REF.201C

DESTRA BENNA AD ALTA CAPACITA '

Comp. 944029647

8030L, 9030L, 9040L, 9050L H, 9050L L, 9050L SH, 9060L, 9060L GE, 9060L H, 9060L SH, 9070L H, 9070L L, 9070L L T5, 9070L SH, 9080L, 9080L GE, 9080L H, 9080L SH, 9090L, 9090L GE, 9090L H, 9090L H T4, 9090L H T5, 9090L SH, 9090L SH T4, 9090L SH T5, 9090L T3, 9090X, 9090X GE, 9090X GE T3, 9090X GE T4, 9090X GE T5, 9090X H, 9090X H H, 9090X H T4, 9090X O, 9090X O GE, 9090X O GE T3, 9090X O GE T4, 9090X O GE T5, 9090X O H T4, 9090X O T3, 9090X O T4, 9090X O T5, 9090X OP, 9090X OP GE, 9090X T3, 9090X T4, 9090X T5, , LM625, , SB56, SB58, SB60, SB62, SB64, SB65, VL600, VL6040, VL6050, VL6060, VL6070, VL6080, VL6090, VL610, VL620, VL630, VL640, VL660, VM4090, VX680, VX7090

REF.202C

SINISTRA BENNA AD ALTA CAPACITA '

Comp. 944029648

8030L, 9030L, 9040L, 9050L H, 9050L L, 9050L SH, 9060L, 9060L GE, 9060L H, 9060L SH, 9070L H, 9070L L, 9070L L T5, 9070L SH, 9080L, 9080L GE, 9080L H, 9080L SH, 9090L, 9090L GE, 9090L H, 9090L H T4, 9090L H T5, 9090L SH, 9090L SH T4, 9090L SH T5, 9090L T3, 9090X, 9090X GE, 9090X GE T3, 9090X GE T4, 9090X GE T5, 9090X H, 9090X H H, 9090X H T4, 9090X O, 9090X O GE, 9090X O GE T3, 9090X O GE T4, 9090X O GE T5, 9090X O H T4, 9090X O T3, 9090X O T4, 9090X O T5, 9090X OP, 9090X OP GE, 9090X T3, 9090X T4, 9090X T5, , LM625, , SB36, SB56, SB58, SB60, SB62, SB64, SB65, VL600, VL6040, VL6050, VL6060, VL6070, VL6080, VL6090, VL610, VL620, VL630, VL640, VL660, VM4090, VX680, VX7090

REF.222C

KIT DI 10 AD ALTA CAPACITÀ DESTRA BENNE, già istituite

Comp. 944024789

8030L, 9030L, 9040L, 9050L H, 9050L L, 9050L SH, 9060L, 9060L H, 9070L H, 9070L L, 9070L L T5, 9070L SH, 9080L, 9080L H, 9090L, 9090L H, 9090L H T4, 9090L H T5, 9090L SH T4, 9090L SH T5, 9090L T3, 9090X GE T3, 9090X GE T4, 9090X GE T5, 9090X H T4, 9090X O GE T3, 9090X O GE T4, 9090X O GE T5, 9090X O H T4, 9090X O T3, 9090X O T4, 9090X O T5, 9090X T3, 9090X T4, 9090X T5, SB56, SB58, SB60, SB62, SB64, SB65, VL600, VL6040, VL6050, VL6060, VL6070, VL6080, VL6090, VL610, VL620, VL630, VL640, VL660, VX680, VX7090

REF.223C

KIT DI 10 ELEVATA CAPACITA 'DI SINISTRA BENNE, già istituite

Comp. 944024790

8030L, 9030L, 9040L, 9050L H, 9050L L, 9050L SH, 9060L, 9060L H, 9070L H, 9070L L, 9070L L T5, 9070L SH, 9080L, 9080L H, 9090L, 9090L H, 9090L H T4, 9090L H T5, 9090L SH T4, 9090L SH T5, 9090L T3, 9090X GE T3, 9090X GE T4, 9090X GE T5, 9090X H T4, 9090X O GE T3, 9090X O GE T4, 9090X O GE T5, 9090X O H T4, 9090X O T3, 9090X O T4, 9090X O T5, 9090X T3, 9090X T4, 9090X T5, SB36, SB56, SB58, SB60, SB62, SB64, SB65, VL600, VL6040, VL6050, VL6060, VL6070, VL6080, VL6090, VL610, VL620, VL630, VL640, VL660, VX680, VX7090

REF.203C

DESTRA Secchio con becco lungo

Comp. 944023785

7030L, SB33, SB35, SB36, SB53, SB55, SB56, SB58, SB60, SB62, SB64, SB65, VL5060, VL5080, VL5090, VL530, VL540, VL550, VL570, VM3080, VM3080 AL, VM3090, VN2090

REF.204C

SINISTRA Secchio con becco lungo

Comp. 944023786

7030L, SB33, SB35, SB36, SB53, SB55, SB56, SB58, SB60, SB62, SB64, SB65, VL5060, VL5080, VL5090, VL530, VL540, VL550, VL570, VM3080, VM3080 AL, VM3090, VN2090

REF.224C

KIT DI 10 DESTRA secchi, becco lungo, già istituite

Comp. 87629861

7030L, SB53, SB55, SB56, SB58, SB60, SB62, SB64, VL5060, VL5080, VL5090, VL530, VL540, VL550, VL570

REF.225C

KIT DI 10 SINISTRA secchi, becco lungo, già istituite

Comp. 87629862

7030L, SB53, SB55, SB56, SB58, SB60, SB62, SB64, VL5060, VL5080, VL5090, VL530, VL540, VL550, VL570

REF.735A

FORI DESTRA Secchio con TRE

Comp. 913350503

1620, 1620S, 2720, 7030M, 7030M H, 9040M, 9070M, 9080N H, 9080N L, SB33, SB35, SB36, SB53, SB55, SB56, SB58, SB60, SB62, SB64, VL5060, VL5080, VL5090, VL6040, VL6050, VL6060, VL6070, VL6080, VL6090, VM3080, VM3080 AL, VM3090, VM340, VM370, VM4090, VM460, VN2080, VN2090, VN240, VN260, VN300

REF.735B

Buchi lasciati Secchio con TRE

Comp. 913350502

1620, 1620S, 2720, 7030M, 7030M H, 9040M, 9070M, 9080N H, 9080N L, SB33, SB35, SB36, SB53, SB55, SB56, SB58, SB60, SB62, SB64, VL5060, VL5080, VL5090, VL6040, VL6050, VL6060, VL6070, VL6080, VL6090, VM3080, VM3080 AL, VM3090, VM340, VM370, VM4090, VM460, VN2080, VN2090, VN240, VN260, VN300

REF.735C

KIT 10 DESTRA secchio con 3 FORI

Comp. 87629859

1620, 1620S, 2720, 7030M, 7030M H, 9040M, 9070M, 9080N H, 9080N L, SB33, SB35, SB36, VM3080, VM3090, VM340, VM370, VM4090, VM460, VN2080, VN240, VN260, VN300

REF.735D

KIT 10 SINISTRA secchio con 3 FORI

Comp. 87629860

1620, 1620S, 2720, 7030M, 7030M H, 9040M, 9070M, 9080N H, 9080N L, SB33, SB35, SB36, VM3080, VM3090, VM340, VM370, VM4090, VM460, VN2080, VN240, VN260, VN300

REF.712A

MONTATI Hights BUCKETS 62 + 62 unità. BIANCO SCORREVOLE

Comp. -

8030L, 9030L, 9040L, 9050L H, 9050L L, 9050L SH, 9060L, 9060L GE, 9060L H, 9060L SH, 9070L H, 9070L L, 9070L L T5, 9070L SH, 9080L, 9080L GE, 9080L H, 9080L SH, 9090L, 9090L GE, 9090L H, 9090L H T4, 9090L H T5, 9090L SH, 9090L SH T4, 9090L SH T5, 9090L T3, 9090X, 9090X GE, 9090X GE T3, 9090X GE T4, 9090X GE T5, 9090X H, 9090X H H, 9090X H T4, 9090X O, 9090X O GE, 9090X O GE T3, 9090X O GE T4, 9090X O GE T5, 9090X O H T4, 9090X O T3, 9090X O T4, 9090X O T5, 9090X OP, 9090X OP GE, 9090X T3, 9090X T4, 9090X T5, , LM625, , SB56, SB58, SB60, SB62, SB64, SB65, VL600, VL6040, VL6050, VL6060, VL6070, VL6080, VL6090, VL610, VL620, VL630, VL640, VL660, VM4090, VX680, VX7090

REF.712F

MONTATO Hights BUCKETS 62 + 62 pezzi black SCORREVOLE

Comp. -

8030L, 9030L, 9040L, 9050L H, 9050L L, 9050L SH, 9060L, 9060L GE, 9060L H, 9060L SH, 9070L H, 9070L L, 9070L L T5, 9070L SH, 9080L, 9080L GE, 9080L H, 9080L SH, 9090L, 9090L GE, 9090L H, 9090L H T4, 9090L H T5, 9090L SH, 9090L SH T4, 9090L SH T5, 9090L T3, 9090X, 9090X GE, 9090X GE T3, 9090X GE T4, 9090X GE T5, 9090X H, 9090X H H, 9090X H T4, 9090X O, 9090X O GE, 9090X O GE T3, 9090X O GE T4, 9090X O GE T5, 9090X O H T4, 9090X O T3, 9090X O T4, 9090X O T5, 9090X OP, 9090X OP GE, 9090X T3, 9090X T4, 9090X T5, , LM625, , SB56, SB58, SB60, SB62, SB64, SB65, VL600, VL6040, VL6050, VL6060, VL6070, VL6080, VL6090, VL610, VL620, VL630, VL640, VL660, VM4090, VX680, VX7090

REF.712G

MONTATO Hights BUCKETS 62 + 62 pezzi blue SLIDNG

Comp. -

8030L, 9030L, 9040L, 9050L H, 9050L L, 9050L SH, 9060L, 9060L GE, 9060L H, 9060L SH, 9070L H, 9070L L, 9070L L T5, 9070L SH, 9080L, 9080L GE, 9080L H, 9080L SH, 9090L, 9090L GE, 9090L H, 9090L H T4, 9090L H T5, 9090L SH, 9090L SH T4, 9090L SH T5, 9090L T3, 9090X, 9090X GE, 9090X GE T3, 9090X GE T4, 9090X GE T5, 9090X H, 9090X H H, 9090X H T4, 9090X O, 9090X O GE, 9090X O GE T3, 9090X O GE T4, 9090X O GE T5, 9090X O H T4, 9090X O T3, 9090X O T4, 9090X O T5, 9090X OP, 9090X OP GE, 9090X T3, 9090X T4, 9090X T5, , LM625, , SB56, SB58, SB60, SB62, SB64, SB65, VL600, VL6040, VL6050, VL6060, VL6070, VL6080, VL6090, VL610, VL620, VL630, VL640, VL660, VM4090, VX680, VX7090

REF.712C

MONTATI Hights BUCKETS 68 + 68 unità. BIANCO SCORREVOLE

Comp. -

8030L, 9030L, 9040L, 9050L H, 9050L L, 9050L SH, 9060L, 9060L GE, 9060L H, 9060L SH, 9070L H, 9070L L, 9070L L T5, 9070L SH, 9080L, 9080L GE, 9080L H, 9080L SH, 9090L, 9090L GE, 9090L H, 9090L H T4, 9090L H T5, 9090L SH, 9090L SH T4, 9090L SH T5, 9090L T3, 9090X, 9090X GE, 9090X GE T3, 9090X GE T4, 9090X GE T5, 9090X H, 9090X H H, 9090X H T4, 9090X O, 9090X O GE, 9090X O GE T3, 9090X O GE T4, 9090X O GE T5, 9090X O H T4, 9090X O T3, 9090X O T4, 9090X O T5, 9090X OP, 9090X OP GE, 9090X T3, 9090X T4, 9090X T5, , LM625, , SB56, SB58, SB60, SB62, SB64, SB65, VL600, VL6040, VL6050, VL6060, VL6070, VL6080, VL6090, VL610, VL620, VL630, VL640, VL660, VM4090, VX680, VX7090

REF.712J

MONTATO Hights BUCKETS 68 + 68 pezzi black SCORREVOLE

Comp. -

8030L, 9030L, 9040L, 9050L H, 9050L L, 9050L SH, 9060L, 9060L GE, 9060L H, 9060L SH, 9070L H, 9070L L, 9070L L T5, 9070L SH, 9080L, 9080L GE, 9080L H, 9080L SH, 9090L, 9090L GE, 9090L H, 9090L H T4, 9090L H T5, 9090L SH, 9090L SH T4, 9090L SH T5, 9090L T3, 9090X, 9090X GE, 9090X GE T3, 9090X GE T4, 9090X GE T5, 9090X H, 9090X H H, 9090X H T4, 9090X O, 9090X O GE, 9090X O GE T3, 9090X O GE T4, 9090X O GE T5, 9090X O H T4, 9090X O T3, 9090X O T4, 9090X O T5, 9090X OP, 9090X OP GE, 9090X T3, 9090X T4, 9090X T5, , LM625, , SB56, SB58, SB60, SB62, SB64, SB65, VL600, VL6040, VL6050, VL6060, VL6070, VL6080, VL6090, VL610, VL620, VL630, VL640, VL660, VM4090, VX680, VX7090

REF.712K

MONTATO Hights BUCKETS 68 + 68 pezzi blue SLIDNG

Comp. -

8030L, 9030L, 9040L, 9050L H, 9050L L, 9050L SH, 9060L, 9060L GE, 9060L H, 9060L SH, 9070L H, 9070L L, 9070L L T5, 9070L SH, 9080L, 9080L GE, 9080L H, 9080L SH, 9090L, 9090L GE, 9090L H, 9090L H T4, 9090L H T5, 9090L SH, 9090L SH T4, 9090L SH T5, 9090L T3, 9090X, 9090X GE, 9090X GE T3, 9090X GE T4, 9090X GE T5, 9090X H, 9090X H H, 9090X H T4, 9090X O, 9090X O GE, 9090X O GE T3, 9090X O GE T4, 9090X O GE T5, 9090X O H T4, 9090X O T3, 9090X O T4, 9090X O T5, 9090X OP, 9090X OP GE, 9090X T3, 9090X T4, 9090X T5, , LM625, , SB56, SB58, SB60, SB62, SB64, SB65, VL600, VL6040, VL6050, VL6060, VL6070, VL6080, VL6090, VL610, VL620, VL630, VL640, VL660, VM4090, VX680, VX7090

REF.712B

MONTATO SB BUCKETS 62 + 62 pezzi white SCORREVOLE

Comp. -

7030L, SB33, SB35, SB36, SB53, SB55, SB56, SB58, SB60, SB62, SB64, SB65, VL5060, VL5080, VL5090, VL530, VL540, VL550, VL570, VM3080, VM3080 AL, VM3090, VN2090

REF.712H

MONTATO SB BUCKETS 62 + 62 unità scorrevole, colore nero

Comp. -

7030L, SB33, SB35, SB36, SB53, SB55, SB56, SB58, SB60, SB62, SB64, SB65, VL5060, VL5080, VL5090, VL530, VL540, VL550, VL570, VM3080, VM3080 AL, VM3090, VN2090

Controllare Rif. Prima.

Tutti i marchi appartengono ai rispettivi proprietari e il loro utilizzo è solo a scopo informativo.

WWW.EDUARDOREPUESTOSAGRICOLAS.COM

IVA non inclusa

Trasporto UE gratuito per ordini 500€

NEW HOLLAND-BRAUD COMPATIBLE

EDUARDO

REF.712D

MONTATO SB BUCKETS 55 + 55 pezzi white SCORREVOLE

Comp. -

7030L, SB33, SB35, SB36, SB53, SB55, SB56, SB58, SB60, SB62, SB64, SB65, VL5060, VL5080, VL5090, VL530, VL540, VL550, VL570, VM3080, VM3080 AL, VM3090, VN2090

REF.712L

MONTATO SB BUCKETS 55 + 55 unità scorrevole, colore nero

Comp. -

7030L, SB33, SB35, SB36, SB53, SB55, SB56, SB58, SB60, SB62, SB64, SB65, VL5060, VL5080, VL5090, VL530, VL540, VL550, VL570, VM3080, VM3080 AL, VM3090, VN2090

REF.712E

MONTATI LITTES BENNE 55 + 55 unità, BIANCO SCORREVOLE

Comp. -

1620, 1620S, 2720, 7030M, 7030M H, 9040M, 9070M, 9080N H, 9080N L, SB33, SB35, SB36, SB53, SB55, SB56, SB58, SB60, SB62, SB64, VL5060, VL5080, VL5090, VL6040, VL6050, VL6060, VL6070, VL6080, VL6090, VM3080, VM3080 AL, VM3090, VM340, VM370, VM4090, VM460, VN2080, VN2090, VN240, VN260, VN300

REF.205B

BIANCO SCORREVOLE PAD Per le benne

Comp. 944028054,944005832

1214, 1620, 1620S, 2414, 2420, 2514, 2520, 2614, 2620, 2714, 2720, 9040L, 9040M, 9060L, 9060L H, 9080L, 9080L H, 9090L, 9090L H, 9090X O, 9090X O GE, 9090X O GE T3, 9090X O GE T4, 9090X O GE T5, 9090X O H T4, 9090X O T3, 9090X O T4, 9090X O T5, 9090X OP, 9090X OP GE, , SB33, SB35, SB36, SB52, SB53, SB54, SB55, SB56, SB58, SB60, SB62, SB64, SB65, VL5060, VL5080, VL5090, VL530, VL540, VL550, VL570, VL600, VL6040, VL6050, VL6060, VL6070, VL6080, VL6090, VL610, VL620, VL630, VL640, VL660, VM3080, VM3080 AL, VM3090, VM340, VM370, VM4090, VM460, VN2080, VN2090, VN240, VN260, VN300, VX680, VX7090

REF.206B

PAD SCORREVOLE NERO PER SECCHIO

Comp. 84255554

7030L, 9030L, 9040L, 9040M, 9050L H, 9050L L, 9060L, 9060L GE, 9060L H, 9060L SH, 9070L H, 9070L L, 9070L L T5, 9070M, 9080L, 9080L GE, 9080L H, 9080L SH, 9090L, 9090L GE, 9090L H, 9090L H T4, 9090L H T5, 9090L SH, 9090L T3, 9090X, 9090X GE, 9090X H, 9090X H H, 9090X OP, 9090X OP GE, SB33, SB35, SB36, SB53, SB55, SB56, SB58, SB60, SB62, SB64, VL5060, VL5080, VL5090, VL530, VL540, VL550, VL570, VL600, VL6040, VL6050, VL6060, VL6070, VL6080, VL6090, VL610, VL620, VL630, VL640, VL660, VM3080, VM3080 AL, VM3090, VM340, VM370, VM4090, VM460, VN2080, VN2090, VN240, VN260, VN300, VX680, VX7090

REF.206C

PAD SCORREVOLE BLU PER SECCHIO

Comp. 84487735

7030M, 7030M H, 8030L, 9030L, 9050L H, 9050L L, 9050L SH, 9070L H, 9070L L, 9070L L T5, 9070L SH, 9070M, 9080N H, 9080N L, 9090L H T4, 9090L H T5, 9090L SH T4, 9090L SH T5, 9090L T3, 9090X GE T3, 9090X GE T4, 9090X GE T5, 9090X H T4, 9090X T3, 9090X T4, 9090X T5

REF.218B

SECCHIELLO FISSAGGIO PIASTRA 1,2mm

Comp. 944023592

1214, 7030L, 8030L, 9030L, 9040L, 9050L H, 9050L L, 9050L SH, 9060L, 9060L GE, 9060L H, 9060L SH, 9070L H, 9070L L, 9070L L T5, 9070L SH, 9080L, 9080L GE, 9080L H, 9080L SH, 9090L, 9090L GE, 9090L H, 9090L H T4, 9090L H T5, 9090L SH, 9090L SH T4, 9090L SH T5, 9090L T3, 9090X, 9090X GE, 9090X GE T3, 9090X GE T4, 9090X GE T5, 9090X H, 9090X H H, 9090X H T4, 9090X O, 9090X O GE, 9090X O GE T3, 9090X O GE T4, 9090X O GE T5, 9090X O H T4, 9090X O T3, 9090X O T4, 9090X O T5, 9090X OP, 9090X OP GE, 9090X T3, 9090X T4, 9090X T5, LM625, SB36, SB52, SB53, SB54, SB55, SB56, SB58, SB60, SB62, SB64, SB65, VL5060, VL5080, VL5090, VL530, VL540, VL550, VL570, VL600, VL6040, VL6050, VL6060, VL6070, VL6080, VL6090, VL610, VL620, VL630, VL640, VL660, VM3080, VM3080 AL, VM3090, VM4090, VN2090, VX680, VX7090

REF.218E

NUOVO ! RINFORZATO !

CLIP secchio di plastica FISSAGGIO PIASTRA

Comp. 47844511

7030L, 8030L, 9030L, 9050L H, 9050L L, 9050L SH, 9070L H, 9070L L, 9070L L T5, 9070L SH, 9090L H T4, 9090L H T5, 9090L SH T4, 9090L SH T5, 9090L T3, 9090X GE T3, 9090X GE T4, 9090X GE T5, 9090X H T4, 9090X O GE T3, 9090X O GE T4, 9090X O GE T5, 9090X O H T4, 9090X O T3, 9090X O T4, 9090X O T5, 9090X T3, 9090X T4, 9090X T5,

REF.219D

COLLARE INOX FERMO PER SECCHIO SCORREVOLE PAD Zn

Comp. 913126098

1214, 1620, 1620S, 2414, 2420, 2514, 2520, 2614, 2620, 2714, 2720, 7030L, 7030M, 7030M H, 8030L, 9030L, 9040L, 9040M, 9050L H, 9050L L, 9050L SH, 9060L, 9060L GE, 9060L H, 9060L SH, 9070L H, 9070L L, 9070L L T5, 9070L SH, 9070M, 9080L, 9080L GE, 9080L H, 9080L SH, 9080N H, 9080N L, 9090L, 9090L GE, 9090L H, 9090L H T4, 9090L H T5, 9090L SH, 9090L SH T4, 9090L SH T5, 9090L T3, 9090X, 9090X GE, 9090X GE T3, 9090X GE T4, 9090X GE T5, 9090X H, 9090X H H, 9090X H T4, 9090X O, 9090X O GE, 9090X O GE T3, 9090X O GE T4, 9090X O GE T5, 9090X O H T4, 9090X O T3, 9090X O T4, 9090X O T5, 9090X OP, 9090X OP GE, 9090X T3, 9090X T4, 9090X T5, SB33, SB35, SB36, SB52, SB53, SB54, SB55, SB56, SB58, SB60, SB62, SB64, SB65, VL5060, VL5080, VL5090, VL530, VL540, VL550, VL570, VL600, VL6040, VL6050, VL6060, VL6070, VL6080, VL6090, VL610, VL620, VL630, VL640, VL660, VM3080, VM3080 AL, VM3090, VM340, VM370, VM4090, VM460, VN2080, VN2090, VN240, VN260, VN300, VX680, VX7090

REF.220B

ACCIAIO INOX PIASTRA VL

Comp. 944029158

8030L, 9030L, 9040L, 9040M, 9050L H, 9050L L, 9050L SH, 9060L, 9060L GE, 9060L H, 9060L SH, 9070L H, 9070L L, 9070L L T5, 9070L SH, 9070M, 9080L, 9080L GE, 9080L H, 9080L SH, 9090L, 9090L GE, 9090L H, 9090L H T4, 9090L H T5, 9090L SH, 9090L SH T4, 9090L SH T5, 9090L T3, 9090X, 9090X GE, 9090X GE T3, 9090X GE T4, 9090X GE T5, 9090X H, 9090X H H, 9090X H T4, 9090X O, 9090X O GE, 9090X O GE T3, 9090X O GE T4, 9090X O GE T5, 9090X O H T4, 9090X O T3, 9090X O T4, 9090X O T5, 9090X OP, 9090X OP GE, 9090X T3, 9090X T4, 9090X T5, , SB33, SB35, SB52, SB53, SB54, SB55, SB64, SB65, VL5060, VL5080, VL5090, VL530, VL540, VL550, VL570, VL600, VL6040, VL6050, VL6060, VL6070, VL6080, VL6090, VL610, VL620, VL630, VL640, VL660, VM3080, VM3080 AL, VM3090, VM340, VM370, VM4090, VM460, VN2080, VN240, VN260, VN300, VX680, VX7090

REF.220D

Piastre in acciaio inox SB

Comp. 944011361

2720, 7030L, SB33, SB35, SB36, SB52, SB53, SB54, SB55, SB56, SB58, SB60, SB62, SB64, SB65, VL5060, VL5080, VL5090, VL530, VL540, VL550, VL570, VM3080, VM3080 AL, VM3090, VM4090, VM460, VN2090, VN240

REF.220E

INOX RASCHIETTO DESTRA 4mm

Comp. 84184934

8030L, 9030L, 9040L, 9050L H, 9050L L, 9050L SH, 9060L, 9060L GE, 9060L H, 9060L SH, 9070L H, 9070L L, 9070L L T5, 9070L SH, 9080L, 9080L GE, 9080L H, 9080L SH, 9090L, 9090L GE, 9090L H, 9090L H T4, 9090L H T5, 9090L SH, 9090L SH T4, 9090L SH T5, 9090L T3, 9090X, 9090X GE, 9090X GE T3, 9090X GE T4, 9090X GE T5, 9090X H, 9090X H H, 9090X H T4, 9090X O, 9090X O GE, 9090X O GE T3, 9090X O GE T4, 9090X O GE T5, 9090X O H T4, 9090X O T3, 9090X O T4, 9090X O T5, 9090X OP, 9090X OP GE, 9090X T3, 9090X T4, 9090X T5, VX7090

REF.220F

INOX RASCHIETTO SINISTRA 4mm

Comp. 84184934

8030L, 9030L, 9040L, 9050L H, 9050L L, 9050L SH, 9060L, 9060L GE, 9060L H, 9060L SH, 9070L H, 9070L L, 9070L L T5, 9070L SH, 9080L, 9080L GE, 9080L H, 9080L SH, 9090L, 9090L GE, 9090L H, 9090L H T4, 9090L H T5, 9090L SH, 9090L SH T4, 9090L SH T5, 9090L T3, 9090X, 9090X GE, 9090X GE T3, 9090X GE T4, 9090X GE T5, 9090X H, 9090X H H, 9090X H T4, 9090X O, 9090X O GE, 9090X O GE T3, 9090X O GE T4, 9090X O GE T5, 9090X O H T4, 9090X O T3, 9090X O T4, 9090X O T5, 9090X OP, 9090X OP GE, 9090X T3, 9090X T4, 9090X T5, VX7090

REF.221B

ACCIAIO INOX COVER PLATE 2mm

Comp. 944023349,913126

8030L, 9030L, 9040L, 9050L H, 9050L L, 9050L SH, 9060L, 9060L GE, 9060L H, 9060L SH, 9070L H, 9070L L, 9070L L T5, 9070L SH, 9080L, 9080L GE, 9080L H, 9080L SH, 9090L, 9090L GE, 9090L H, 9090L H T4, 9090L H T5, 9090L SH, 9090L SH T4, 9090L SH T5, 9090L T3, 9090X, 9090X GE, 9090X GE T3, 9090X GE T4, 9090X GE T5, 9090X H, 9090X H H, 9090X H T4, 9090X O, 9090X O GE, 9090X O GE T3, 9090X O GE T4, 9090X O GE T5, 9090X O H T4, 9090X O T3, 9090X O T4, 9090X O T5, 9090X OP, 9090X OP GE, 9090X T3, 9090X T4, 9090X T5, SB65, VL600, VL6040, VL6050, VL6060, VL6070, VL6080, VL6090, VL610, VL620, VL630, VL640, VL660, VM4090, VX680, VX7090

REF.737A

SECCHIELLO piastra di fissaggio 3 FORI

Comp. 944003810

SB60 ,SB62 ,SB64 ,VL5060 ,VL5080 ,VL5090 ,VL6040 ,VL6050 ,VL6060 ,VL6080 ,VL6090 ,VM3080 AL ,VM3080 ,VM3090 ,VM340 ,VM370 ,VM4090 ,VM460 ,VN2080 ,VN2090 ,VN260 ,7030M ,9070M ,9040M ,9080N H ,9080N H ,9080N L ,1620,1620S ,VL6070 ,VN240 ,VN300 ,2720,SB33 ,SB35 ,SB36 ,SB56 ,SB58 ,7030M H

REF.737B

ACCIAIO INOX PIASTRA TAZZE 3 FORI

Comp. 47370664

7030M, 7030M H, 9070M, 9080N H, 9080N L, VN2080, VN2090

REF.737C

ACCIAIO INOX COVER PLATE 2 FORI

Comp. 913126192

1214, 1620, 1620S, 2414, 2420, 2514, 2520, 2614, 2620, 2714, 2720, 7030L, 7030M, 7030M H, 9040M, 9070M, 9080N H, 9080N L, SB33, SB35, SB36, SB52, SB53, SB54, SB55, SB56, SB58, SB60, SB62, SB64, VL5060, VL5080, VL5090, VL530, VL540, VL550, VL570, VL6040, VL6050, VL6060, VL6070, VL6080, VL6090, VM3080, VM3080 AL, VM3090, VM340, VM370, VM4090, VM460, VN2080, VN2090, VN240, VN260, VN300

REF.229C

CATENA PER BENNE 267 ETICHETTE (11,6 metri) (67 secchi)

Comp. 944032962

9030L, 9040L, 9040M, 9050L H, 9050L L, 9050L SH, 9060L, 9060L H, 9060L SH, 9070L H, 9070L L, 9070L L T5, 9070M, 9080L, 9080L H, 9080L SH, 9090L, 9090L H, 9090L H T4, 9090L H T5, 9090L SH, 9090L SH T4, 9090L T3, 9090X, 9090X GE, 9090X GE T4, 9090X H, 9090X H H, 9090X T4, VL600, VL6040, VL6050, VL6060, VL6070, VL6080, VL6090, VL610, VL620, VL630, VL640, VL660, VX680, VX7090

REF.229D

CATENA PER BENNE 247 etichette (10,7M) (62 secchi)

Comp. 944031392

9040L, 9040M, 9060L, 9060L GE, 9060L H, 9060L SH, 9080L, 9080L GE, 9080L H, 9080L SH, 9090L, SB36, SB56, SB58, SB60, SB62, SB64, VL600, VL6040, VL6050, VL6060, VL6070, VL6080, VL6090, VL610, VL620, VL630, VL640, VL660, VM4090

REF.229F

-LABELS catena (100 metri)

Comp. -

9090X O, 9090X O GE, 9090X O GE T3, 9090X O GE T4, 9090X O GE T5, 9090X O H T4, 9090X O T3, 9090X O T4, 9090X O T5, 9090X OP, 9090X OP GE, VX7090

IVA non inclusa

Trasporto UE gratuito per ordini 500€

Tutti i marchi appartengono ai rispettivi proprietari e il loro utilizzo è solo a scopo informativo.

WWW.EDUARDOREPUESTOSAGRICOLAS.COM

Controllare Rif. Prima.

NEW HOLLAND-BRAUD COMPATIBLE

EDUARDO

REF.229G

CATENA PER BENNE 3 ETICHETTE

Comp. 913505083

9090X O, 9090X O GE, 9090X O GE T3, 9090X O GE T4, 9090X O GE T5, 9090X O H T4, 9090X O T3, 9090X O T4, 9090X O T5, 9090X OP, 9090X OP GE, VX7090

REF.229H

CATENA PER BENNE 287 ETICHETTE (11,92 m.) (72 secchi) TESTA OLIVE

Comp. -

9090X O, 9090X O GE, 9090X O GE T3, 9090X O GE T4, 9090X O GE T5, 9090X O H T4, 9090X O T3, 9090X O T4, 9090X O T5, 9090X OP, 9090X OP GE, VX7090

REF.230B

SECCHIELLO BLIND DADO INOX

Comp. 920008124

1620, 1620S, 2414, 2420, 2514, 2520, 2614, 2620, 2714, 2720, 7030L, 7030M, 7030M H, 8030L, 9030L, 9040L, 9040M, 9050L H, 9050L L, 9050L SH, 9060L, 9060L GE, 9060L H, 9060L SH, 9070L H, 9070L L, 9070L L T5, 9070L SH, 9070M, 9070N H T5, 9070N L, 9070N L T5, 9070 , 9080L, 9080L GE, 9080L H, 9080L SH, 9080N H, 9080N L, 9090L, 9090L GE, 9090L H, 9090L H T4, 9090L H T5, 9090L SH, 9090L SH T4, 9090L SH T5, 9090L T3, 9090X, 9090X GE, 9090X GE T3, 9090X GE T4, 9090X GE T5, 9090X H, 9090X H H, 9090X H T4, 9090X O, 9090X O GE, 9090X O GE T3, 9090X O GE T4, 9090X O GE T5, 9090X O H T4, 9090X O T3, 9090X O T4, 9090X O T5, 9090X OP, 9090X OP GE, 9090X T3, 9090X T4, 9090X T5, SB33, SB35, SB36, SB52, SB53, SB54, SB55, SB56, SB58, SB60, SB62, SB64, SB65, VL5060, VL5080, VL5090, VL530, VL540, VL550, VL570, VL600, VL6040, VL6050, VL6060, VL6070, VL6080, VL6090, VL610, VL620, VL630, VL640, VL660, VM3080, VM3080 AL, VM3090, VM340, VM370, VM4090, VM460, VN2080, VN2090, VN240, VN260, VN300, VX680, VX7090

REF.231A

CHAIN LINK (completo)

Comp. 48147387(920008122+2pz913126220+86625003)

1214, 1620, 1620S, 2414, 2420, 2514, 2520, 2614, 2620, 2714, 2720, 7030L, 7030M, 7030M H, 8030L, 9030L, 9040L, 9040M, 9050L H, 9050L L, 9050L SH, 9060L, 9060L GE, 9060L H, 9060L SH, 9070L H, 9070L L, 9070L L T5, 9070L SH, 9070M, 9070N L, 9070N L T5, 9070 , 9080L, 9080L GE, 9080L H, 9080L SH, 9080N H, 9080N L, 9090L, 9090L GE, 9090L H, 9090L H T4, 9090L H T5, 9090L SH, 9090L SH T4, 9090L SH T5, 9090L T3, 9090X, 9090X GE, 9090X GE T3, 9090X GE T4, 9090X GE T5, 9090X H, 9090X H H, 9090X H T4, 9090X O, 9090X O GE, 9090X O GE T3, 9090X O GE T4, 9090X O GE T5, 9090X O H T4, 9090X O T3, 9090X O T4, 9090X O T5, 9090X OP, 9090X OP GE, 9090X T3, 9090X T4, 9090X T5, SB33, SB35, SB36, SB52, SB53, SB54, SB55, SB56, SB58, SB60, SB62, SB64, SB65, VL5060, VL5080, VL5090, VL530, VL540, VL550, VL570, VL600, VL6040, VL6050, VL6060, VL6070, VL6080, VL6090, VL610, VL620, VL630, VL640, VL660, VM3080, VM3080 AL, VM3090, VM340, VM370, VM4090, VM460, VN2080, VN2090, VN240, VN260, VN300, VX680, VX7090

REF.215B

AGITAZIONE ROD Ø32 MM, foro interno Ø15mm / 1739 MM

Comp. 944007307, 84171535,47699254

SB60 ,SB62 ,SB64 ,SB65 ,VL5060 ,VL5080 ,VL5090 ,VL6040 ,VL6050 ,VL6060 ,VL6080 ,VL6090 ,VM3080 AL , ,VM3080 ,VM3090 ,VM340 ,VM370 ,VM4090 ,VM460 ,VN2090 ,VX7090 ,VX7090,7030L ,7030M ,8030L ,9080L GE ,9080L ,9080L H ,9080L SH ,9090L ,9090L H ,9090L SH ,9050L H ,9090L H T4 ,9070L H ,9070L L ,9050L L ,9040L ,9060L GE ,9060L H ,9060L SH ,9070M ,9040M ,9090X O HEAD T4 ,9090X GE ,9090X ,9090X H ,9090X O GE ,9090X O ,9090X GE T4 ,9090X O GE T4 ,9090X T4 ,9090X O T4 ,9090X HEAD T4 ,9090X O GE T5 ,9090X GE T5 ,9090X T5 ,VL640 ,VL660 ,VX680 ,9060L ,9030L ,VL530 ,VL540 ,VL550 ,VL570 ,9090L GE ,VL600 ,VL6070 ,VL610 ,VL620 ,VL630 ,9090X O T3 ,9090X O T5 ,9090L H T5 ,9090L SH T4 ,9090X H HEAD ,9090X OP ,9090X O GE T3 ,9090X OP GE ,SB33 ,SB35 ,SB36 ,SB52 ,SB53 ,SB54 ,SB55 ,SB56 ,SB58 ,9090X GE T3 ,9090X T3 ,9090L T3 ,9090L SH T5 ,7030M HEAD ,9050L SH ,9070L SH ,9070L L T5 ,9050L SH T5 ,9070M T5 ,9030L T5 ,9070L H T5 ,9070L SH T5 ,9050L H T5 ,9050L L T5 ,8030L T5 ,11.90X MULTI

REF.215E

BENT AGITAZIONE ASTA Ø25 mm S. 9000N

Comp. 47699249, 944031167, 84174661

9080N H, 9080N L, VN2080, VN240, VN260

REF.232B

BAR IN FIBRA CON TUBO INOX. BENT, Olive Grove (lunghezza 100 cm)

Comp. -

9090X O, 9090X O GE, 9090X O GE T3, 9090X O GE T4, 9090X O H T4, 9090X O T3, 9090X O T4, 9090X OP, 9090X OP GE, GREGOIRE 1, GREGOIRE

REF.233B

FIBRA DI BAR CON TUBO INOX.WITHOUT BEND, Olive Grove (lunghezza 100 cm)

Comp. -

9090X O, 9090X O GE, 9090X O GE T3, 9090X O GE T4, 9090X O H T4, 9090X O T3, 9090X O T4, 9090X OP, 9090X OP GE, GREGOIRE 1, GREGOIRE

REF.104A

OLIVE INFERIORE SHAKER 935 millimetri Ø28

Comp. 265574

9090X, 9090X GE, 9090X GE T3, 9090X GE T4, 9090X GE T5, 9090X H, 9090X H H, 9090X H T4, 9090X O, 9090X O GE, 9090X O GE T3, 9090X O GE T4, 9090X O GE T5, 9090X O H T4, 9090X O T3, 9090X O T4, 9090X O T5, 9090X OP, 9090X OP GE, 9090X T3, 9090X T4, 9090X T5, SB65, VX680, VX7090

REF.517A

HALF FLANGIA

Comp. 944025739

7030M, 7030M H, 8030L, 9040L, 9040M, 9060L, 9060L GE, 9060L H, 9060L SH, 9080L, 9080L GE, 9080L H, 9080L SH, 9090L, 9090L GE, 9090L H, 9090L SH, 9090L T3, 9090X, 9090X GE, 9090X H, 9090X H H, VL5060, VL5080, VL5090, VL550, VL570, VL6040, VL6050, VL6060, VL6070, VL6080, VL6090, VL610, VL620, VL630, VL640, VL660, VM3080, VM3080 AL, VM3090, VM370, VM4090, VM460, VN2090, VX680, VX7090

REF.518A

HALF FLANGIA

Comp. 944021280

7030M, 7030M H, 8030L, 9040L, 9040M, 9050L L, 9050L SH, 9060L, 9060L GE, 9060L H, 9060L SH, 9070L L, 9070L L T5, 9070L SH, 9070M, 9080L, 9080L GE, 9080L H, 9080L SH, 9090L, 9090L GE, 9090L H, 9090L SH, 9090L SH T4, 9090L SH T5, 9090L T3, 9090X, 9090X GE, 9090X H, 9090X H H, VL5060, VL5080, VL5090, VL550, VL570, VL6040, VL6050, VL6060, VL6070, VL6080, VL6090, VL610, VL620, VL630, VL640, VL660, VM3080, VM3080 AL, VM3090, VM370, VM4090, VM460, VN2090, VX680, VX7090

REF.519A

BOCCOLA Ø48 MM PER COLONNA FLANGIA

Comp. 944026268

7030M, 7030M H, 8030L, 9040L, 9040M, 9050L L, 9050L SH, 9060L, 9060L GE, 9060L H, 9060L SH, 9070L L, 9070L L T5, 9070L SH, 9070M, 9080L, 9080L GE, 9080L H, 9080L SH, 9090L, 9090L GE, 9090L H, 9090L SH, 9090L SH T4, 9090L SH T5, 9090L T3, 9090X, 9090X GE, 9090X H, 9090X H H, VL5060, VL5080, VL5090, VL550, VL570, VL6040, VL6050, VL6060, VL6070, VL6080, VL6090, VL610, VL620, VL630, VL640, VL660, VM3080, VM3080 AL, VM3090, VM370, VM4090, VM460, VN2090, VX680, VX7090

REF.519B

VITE M14X60ZN

Comp. 1116421

7030M, 7030M H, 8030L, 9030L, 9040L, 9040M, 9050L H, 9050L L, 9050L SH, 9060L, 9060L GE, 9060L H, 9060L SH, 9070L H, 9070L L, 9070L L T5, 9070L SH, 9070M, 9080L, 9080L GE, 9080L H, 9080L SH, 9090L, 9090L GE, 9090L H, 9090L H T4, 9090L H T5, 9090L SH, 9090L SH T4, 9090L SH T5, 9090L T3, 9090X, 9090X GE, 9090X GE T3, 9090X GE T4, 9090X GE T5, 9090X H, 9090X H H, 9090X T3, 9090X T4, 9090X T5, SB65, TL58 I, VL5060, VL5080, VL5090, VL530, VL540, VL550, VL570, VL600, VL6040, VL6050, VL6060, VL6070, VL6080, VL6090, VL610, VL620, VL630, VL640, VL660, VM3080, VM3080 AL, VM3090, VM340, VM370, VM4090, VM460, VX680, VX7090

REF.519C

VIS M14X50ZN

Comp. 1116221

1620, 1620S, 2420, 2520, 2620, 7030M, 7030M H, 8030L, 9030L, 9050L H, 9050L L, 9050L SH, 9070L H, 9070L L, 9070L L T5, 9070L SH, 9070M, 9090L H T4, 9090L H T5, 9090L SH T4, 9090L SH T5, 9090L T3, 9090X GE T3, 9090X GE T4, 9090X GE T5, 9090X T3, 9090X T4, 9090X T5, SB52, SB54, VL5060, VL5080, VL5090, VL530, VL540, VL550, VL570, VL600, VL6040, VL6050, VL6060, VL6070, VL6080, VL6090, VL610, VL620, VL630, VL640, VL660, VM3080, VM3080 AL, VM3090, VM340, VM370, VM4090, VM460, VX680, VX7090

REF.520A

ACCIAIO INOX COVER PLATE

Comp. 944025488

7030M, 7030M H, 8030L, 9040L, 9040M, 9050L L, 9050L SH, 9060L, 9060L GE, 9060L H, 9060L SH, 9070L L, 9070L L T5, 9070L SH, 9070M, 9080L, 9080L GE, 9080L H, 9080L SH, 9090L, 9090L GE, 9090L H, 9090L SH, 9090L SH T4, 9090L SH T5, 9090L T3, 9090X, 9090X GE, 9090X H, 9090X H H, VL5080, VL5090, VL550, VL570, VL6050, VL6060, VL6070, VL6080, VL6090, VL610, VL620, VL630, VL640, VL660, VM3080 AL, VM3090, VM370, VM4090, VM460, VX680, VX7090

REF.521A

SET COMPLETO (Semiguscio + Semiguscio + boccola + 2 protezioni + 2 viti M6 + 2 dadi M6 + 1 rondella M14 + 2 viti M14 + 2 dado M14)

Comp. -

7030M, 7030M H, 8030L, 9040L, 9040M, 9050L L, 9050L SH, 9060L, 9060L GE, 9060L H, 9060L SH, 9070L L, 9070L L T5, 9070L SH, 9070M, 9080L, 9080L GE, 9080L H, 9080L SH, 9090L, 9090L GE, 9090L H, 9090L SH, 9090L SH T4, 9090L SH T5, 9090L T3, 9090X, 9090X GE, 9090X H, 9090X H H, VL5080, VL5090, VL550, VL570, VL6050, VL6060, VL6070, VL6080, VL6090, VL610, VL620, VL630, VL640, VL660, VM3080 AL, VM3090, VM370, VM4090, VM460, VX680, VX7090,462

REF.546B

SUPPORTO VARA FIBRA KIT

Comp. -

1214, 2414, 2514, 2614, 2714, 9090X GE T3, 9090X GE T4, 9090X GE T5, 9090X H, 9090X O, 9090X O GE, 9090X O GE T3, 9090X O GE T4, 9090X O H T4, 9090X O T3, 9090X O T4, 9090X O T5, SB65, T140, TB15, VX680, VX7090

REF.207B

AGITAZIONE ROD BIELLA

Comp. 944035000, 87586176

7030L, 7030M, 7030M H, 8030L, 9030L, 9040L, 9040M, 9050L H, 9050L L, 9050L SH, 9060L, 9060L GE, 9060L H, 9060L SH, 9070L H, 9070L L, 9070L L T5, 9070L SH, 9070M, 9080L, 9080L GE, 9080L H, 9080L SH, 9090L, 9090L GE, 9090L H, 9090L H T4, 9090L H T5, 9090L SH, 9090L SH T4, 9090L SH T5, 9090L T3, 9090X, 9090X GE, 9090X GE T3, 9090X GE T4, 9090X GE T5, 9090X H, 9090X H H, 9090X H T4, 9090X O, 9090X O GE, 9090X O GE T3, 9090X O GE T4, 9090X O GE T5, 9090X O H T4, 9090X O T3, 9090X O T4, 9090X O T5, 9090X OP, 9090X OP GE, 9090X T3, 9090X T4, 9090X T5, , VL5060, VL5080, VL5090, VL530, VL540, VL550, VL570, VL600, VL6040, VL6050, VL6060, VL6070, VL6080, VL6090, VL610, VL620, VL630, VL640, VL660, VM3080, VM3080 AL, VM3090, VM340, VM370, VM4090, VM460, VX680, VX7090

REF.208B

AGITAZIONE forma di bastoncello BIELLA

Comp. 944036901, 87586178

7030L, 7030M, 7030M H, 8030L, 9030L, 9040L, 9040M, 9050L H, 9050L L, 9050L SH, 9060L, 9060L GE, 9060L H, 9060L SH, 9070L H, 9070L L, 9070L L T5, 9070L SH, 9070M, 9080L, 9080L GE, 9080L H, 9080L SH, 9090L, 9090L GE, 9090L H, 9090L H T4, 9090L H T5, 9090L SH, 9090L SH T4, 9090L SH T5, 9090L T3, 9090X, 9090X GE, 9090X GE T3, 9090X GE T4, 9090X GE T5, 9090X H, 9090X H H, 9090X H T4, 9090X T3, 9090X T4, 9090X T5, VL5060, VL5080, VL5090, VL550, VL570, VL600, VL6040, VL6050, VL6060, VL6070, VL6080, VL6090, VL610, VL620, VL630, VL640, VL660, VM3080, VM3080 AL, VM3090, VM340, VM370, VM4090, VM460, VX680, VX7090

Controllare Rif. Prima.

Tutti i marchi appartengono ai rispettivi proprietari e il loro utilizzo è solo a scopo informativo.

WWW.EDUARDOREPUESTOSAGRICOLAS.COM

IVA non inclusa

Trasporto UE gratuito per ordini 500€

NEW HOLLAND-BRAUD COMPATIBLE

EDUARDO

REF.209B

Boccola in Plastica PER BIELLA COMPONENTI

Comp. 944031036

7030L, 7030M, 7030M H, 8030L, 9030L, 9040L, 9040M, 9050L H, 9050L L, 9050L SH, 9060L, 9060L GE, 9060L H, 9060L SH, 9070L H, 9070L L, 9070L L T5, 9070L SH, 9070M, 9080L, 9080L GE, 9080L H, 9080L SH, 9090L, 9090L GE, 9090L H, 9090L SH, 9090L SH T4, 9090L H T5, 9090L SH, 9090L SH T4, 9090L SH T5, 9090L T3, 9090X, 9090X GE, 9090X GE T3, 9090X GE T4, 9090X GE T5, 9090X H, 9090X H H, 9090X H T4, 9090X O, 9090X O GE, 9090X O GE T5, 9090X O H T4, 9090X O T3, 9090X O T4, 9090X O T5, 9090X OP, 9090X OP GE, 9090X T3, 9090X T4, 9090X T5, SB33, SB35, SB53, SB55, VL5060, VL5080, VL5090, VL530, VL540, VL550, VL570, VL600, VL6040, VL6050, VL6060, VL6070, VL6080, VL6090, VL610, VL620, VL630, VL640, VL660, VM3080, VM3080 AL, VM3090, VM340, VM370, VM4090, VM460, VN2090,

REF.209C

WHASER AGITAZIONE ROD

Comp. 944034949

7030L, 7030M, 7030M H, 8030L, 9030L, 9040L, 9040M, 9050L H, 9050L L, 9050L SH, 9060L, 9060L GE, 9060L H, 9060L SH, 9070L H, 9070L L, 9070L L T5, 9070L SH, 9070M, 9080L, 9080L GE, 9080L H, 9080L SH, 9090L, 9090L GE, 9090L H, 9090L H T4, 9090L H T5, 9090L SH, 9090L SH T4, 9090L SH T5, 9090L T3, 9090X, 9090X GE, 9090X GE T3, 9090X GE T4, 9090X GE T5, 9090X H, 9090X H H, 9090X H T4, 9090X O, 9090X O GE, 9090X O GE T3, 9090X O GE T4, 9090X O GE T5, 9090X O H T4, 9090X O T3, 9090X O T4, 9090X O T5, 9090X OP, 9090X OP GE, 9090X T3, 9090X T4, 9090X T5, VL5060, VL5080, VL5090, VL530, VL540, VL550, VL570, VL600, VL6040, VL6050, VL6060, VL6070, VL6080, VL6090, VL610, VL620, VL630, VL640, VL660, VM3080, VM3080 AL, VM3090, VM340, VM370, VM4090, VM460, VX680, VX7090

REF.209D

MANICA

Comp. 944035002

7030L, 7030M, 7030M H, 8030L, 9030L, 9040L, 9040M, 9050L H, 9050L L, 9050L SH, 9060L, 9060L GE, 9060L H, 9060L SH, 9070L H, 9070L L, 9070L L T5, 9070L SH, 9070M, 9080L, 9080L GE, 9080L H, 9080L SH, 9090L, 9090L GE, 9090L H, 9090L H T4, 9090L H T5, 9090L SH, 9090L SH T4, 9090L SH T5, 9090L T3, 9090X, 9090X GE, 9090X GE T3, 9090X GE T4, 9090X GE T5, 9090X H, 9090X H H, 9090X H T4, 9090X O, 9090X O GE, 9090X O GE T3, 9090X O GE T4, 9090X O GE T5, 9090X O H T4, 9090X O T3, 9090X O T4, 9090X O T5, 9090X OP, 9090X OP GE, 9090X T3, 9090X T4, 9090X T5, VL5060, VL5080, VL5090, VL530, VL540, VL550, VL570, VL600, VL6040, VL6050, VL6060, VL6070, VL6080, VL6090, VL610, VL620, VL630, VL640, VL660, VM3080, VM3080 AL, VM3090, VM340, VM370, VM4090, VM460, VX680, VX7090

REF.210B

BIELLA COMPONENTI (PIVOT TRATTATO TERMICAMENTE)

944034949

7030L, 7030M, 7030M H, 8030L, 9030L, 9040L, 9040M, 9050L H, 9050L L, 9050L SH, 9060L, 9060L GE, 9060L H, 9060L SH, 9070L H, 9070L L, 9070L L T5, 9070L SH, 9070M, 9080L, 9080L GE, 9080L H, 9080L SH, 9090L, 9090L GE, 9090L H, 9090L H T4, 9090L H T5, 9090L SH, 9090L SH T4, 9090L SH T5, 9090L T3, 9090X, 9090X GE, 9090X GE T3, 9090X GE T4, 9090X GE T5, 9090X H, 9090X H H, 9090X H T4, 9090X O, 9090X O GE, 9090X O GE T3, 9090X O GE T4, 9090X O GE T5, 9090X O H T4, 9090X O T3, 9090X O T4, 9090X O T5, 9090X OP, VL5090, VL530, VL540, VL550, VL570, VL600, VL6040, VL6050, VL6060, VL6070, VL6080, VL6090, VL610, VL620, VL630, VL640, VL660

REF.211B

COMPLET AGITAZIONE ROD BIELLA

Comp. -

7030L, 7030M, 7030M H, 8030L, 9030L, 9040L, 9040M, 9050L H, 9050L L, 9050L SH, 9060L, 9060L GE, 9060L H, 9060L SH, 9070L H, 9070L L, 9070L L T5, 9070L SH, 9070M, 9080L, 9080L GE, 9080L H, 9080L SH, 9090L, 9090L GE, 9090L H, 9090L H T4, 9090L H T5, 9090L SH, 9090L SH T4, 9090L SH T5, 9090L T3, 9090X, 9090X GE, 9090X GE T3, 9090X GE T4, 9090X GE T5, 9090X H, 9090X H H, 9090X H T4, 9090X O, 9090X O GE, 9090X O GE T3, 9090X O GE T4, 9090X O GE T5, 9090X O H T4, 9090X O T3, 9090X O T4, 9090X O T5, 9090X OP, 9090X OP GE, 9090X T3, 9090X T4, 9090X T5, , VL5060, VL5080, VL5090, VL530, VL540, VL550, VL570, VL600, VL6040, VL6050, VL6060, VL6070, VL6080, VL6090, VL610, VL620, VL630, VL640, VL660, VM3080, VM3080 AL, VM3090, VM340, VM370, VM4090, VM460, VX680, VX7090

REF.212B

COMPLET AGITAZIONE forma di bastoncello BIELLA

Comp. -

7030L, 7030M, 7030M H, 8030L, 9030L, 9040L, 9040M, 9050L H, 9050L L, 9050L SH, 9060L, 9060L GE, 9060L H, 9060L SH, 9070L H, 9070L L, 9070L L T5, 9070L SH, 9070M, 9080L, 9080L GE, 9080L H, 9080L SH, 9090L, 9090L GE, 9090L H, 9090L H T4, 9090L H T5, 9090L SH, 9090L SH T4, 9090L SH T5, 9090L T3, 9090X, 9090X GE, 9090X GE T3, 9090X GE T4, 9090X GE T5, 9090X H, 9090X H H, 9090X H T4, 9090X O, 9090X O GE, 9090X O GE T3, 9090X O GE T4, 9090X O GE T5, 9090X O H T4, 9090X O T3, 9090X O T4, 9090X O T5, 9090X OP, 9090X OP GE, 9090X T3, 9090X T4, 9090X T5, , VL5060, VL5080, VL5090, VL530, VL540, VL550, VL570, VL600, VL6040, VL6050, VL6060, VL6070, VL6080, VL6090, VL610, VL620, VL630, VL640, VL660, VM3080, VM3080 AL, VM3090, VM340, VM370, VM4090, VM460, VX680, VX7090

REF.226A

PROTEZIONE AGITAZIONE ASTA NUOVO

Comp. 944027099

7030L, 7030M, 7030M H, 8030L, 9030L, 9040L, 9040M, 9050L H, 9050L L, 9050L SH, 9060L, 9060L GE, 9060L H, 9060L SH, 9070L H, 9070L L, 9070L L T5, 9070L SH, 9070M, 9080L, 9080L GE, 9080L H, 9080L SH, 9090L, 9090L GE, 9090L H, 9090L H T4, 9090L H T5, 9090L SH, 9090L SH T4, 9090L SH T5, 9090L T3, 9090X, 9090X GE, 9090X GE T3, 9090X GE T4, 9090X GE T5, 9090X H, 9090X H H, 9090X H T4, 9090X O H T4, 9090X T3, 9090X T4, 9090X T5, VL5080, VL5090, VL530, VL540, VL550, VL570, VL600, VL6040, VL6050, VL6060, VL6070, VL6080, VL6090, VL610, VL620, VL630, VL640, VL660, VM3080, VM3080 AL, VM3090, VM340, VM370, VM4090, VM460, VX680, VX7090

REF.227A

INOX RACCORDO FINE PER AGITAZIONE ASTA

Comp. 944029130

7030L, 7030M, 7030M H, 8030L, 9030L, 9040L, 9040M, 9050L H, 9050L L, 9050L SH, 9060L, 9060L GE, 9060L H, 9060L SH, 9070L H, 9070L L, 9070L L T5, 9070L SH, 9070M, 9080L, 9080L GE, 9080L H, 9080L SH, 9090L, 9090L GE, 9090L H, 9090L H T4, 9090L H T5, 9090L SH, 9090L SH T4, 9090L SH T5, 9090L T3, 9090X, 9090X GE, 9090X GE T3, 9090X GE T4, 9090X GE T5, 9090X H, 9090X H H, 9090X H T4, 9090X O, 9090X O GE, 9090X O GE T3, 9090X O GE T4, 9090X O GE T5, 9090X O H T4, 9090X O T3, 9090X O T4, 9090X O T5, 9090X OP, 9090X OP GE, 9090X T3, 9090X T4, 9090X T5, SB33, SB35, SB53, SB55, VL5060, VL5080, VL5090, VL530, VL540, VL550, VL570, VL600, VL6040, VL6050, VL6060, VL6070, VL6080, VL6090, VL610, VL620, VL630, VL640, VL660, VM3080, VM3080 AL, VM3090, VM340, VM370, VM4090, VM460, VN2090, VN300, VX680, VX7090

REF.263A

AGITAZIONE PORTA ASTA FLANGIA IN ACCIAIO INOX

Comp. 944001181

1620, 1620S, 2420, 2520, 2620, 2720, 7030L, 7030M, 7030M H, 8030L, 9030L, 9040L, 9040M, 9050L H, 9050L L, 9050L SH, 9060L, 9060L GE, 9060L H, 9060L SH, 9070L H, 9070L L, 9070L L T5, 9070L SH, 9070M, 9080L, 9080L GE, 9080L H, 9080L SH, 9090L, 9090L GE, 9090L H, 9090L H T4, 9090L H T5, 9090L SH, 9090L SH T4, 9090L SH T5, 9090L T3, 9090X, 9090X GE, 9090X GE T3, 9090X GE T4, 9090X GE T5, 9090X H, 9090X H H, 9090X H T4, 9090X O, 9090X O GE, 9090X O GE T3, 9090X O GE T4, 9090X O GE T5, 9090X O H T4, 9090X O T3, 9090X O T4, 9090X O T5, 9090X OP, 9090X OP GE, 9090X T3, 9090X T4, 9090X T5, SB33, SB35, SB36, SB52, SB53, SB54, SB55, SB56, SB58, SB60, SB62, SB64, SB65, VL5060, VL5080, VL5090, VL530, VL540, VL550, VL570, VL600, VL6040, VL6050, VL6060, VL6070, VL6080, VL6090, VL610, VL620, VL630, VL640, VL660, VM3080, VM3080 AL, VM3090, VM340, VM370, VM4090, VM460, VN2080, VN2090, VN300, VX680, VX7090

REF.286A

BRAUD LINK BIELLA SET - NUOVA VERSIONE

Comp. -

VL5060 ,VL6040 ,7030L ,8030L ,9070L L ,9050L L ,9040L ,9090X GE T4 ,9090X T4 ,9090X H T4 ,9090X GE T5 ,9090X T5 ,9060L ,9030L ,VL530 ,VL540 ,VL600 ,SB33 ,SB35 ,SB53 ,SB55 ,9090X GE T3 ,9090X T3 ,9090L T3 ,9070L L T5

REF.286B

BRAUD LINK A FORMA DI BIELLA SET - NUOVA VERSIONE

Comp. -

VL5060 ,VL6040 ,7030L ,8030L ,9070L L ,9050L L ,9040L ,9090X GE T4 ,9090X T4 ,9090X H T4 ,9090X GE T5 ,9090X T5 ,9060L ,9030L ,VL530 ,VL540 ,VL600 ,SB33 ,SB35 ,SB53 ,SB55 ,9090X GE T3 ,9090X T3 ,9090L T3 ,9070L L T5

REF.287A

LINK BIELLA SET SOSTITUZIONE ASTA METALLICA

Comp. -

VL5080 ,VL5090 ,VL6050 ,VL6060 ,VL6080 ,VL6090 ,VM3080 AL ,VM3090 ,VM370 ,VM4090 ,VM460 ,VX7090 ,7030L ,7030M ,8030L ,9080L GE ,9080L ,9080L H ,9080L SH ,9090L ,9090L H ,9090L SH ,9050L H ,9090L H T4 ,9070L H ,9070L L ,9050L L ,9040L ,9060L GE ,9060L H ,9060L SH ,9070M ,9040M ,9090X O H T4 ,9090X GE ,9090X ,9090X H ,9090X GE T4 ,9090X T4 ,9090X H T4 ,9090X O, 9090X O GE, 9090X O GE T3, 9090X GE T4 ,9090X T4 ,9090X T5 ,VL640 ,VL660 ,VX680 ,9060L ,9030L ,VL550 ,VL570 ,9090L GE ,VL6070 ,VL610 ,VL620 ,VL630 ,9090L H T5 ,9090L SH T4 ,9090X H H ,9090X GE T3 ,9090X T3 ,9090L T3 ,9090L SH T5 ,7030M H ,9050L SH ,9070L SH ,9070L L T5 ,

REF.287B

LINK A FORMA DI SET BIELLA SOSTITUZIONE ASTA METALLICA

Comp. -

VL5080 ,VL5090 ,VL6050 ,VL6060 ,VL6080 ,VL6090 ,VM3080 AL ,VM3090 ,VM370 ,VM4090 ,VM460 ,VX7090 ,7030L ,7030M ,8030L ,9080L GE ,9080L ,9080L H ,9080L SH ,9090L ,9090L H ,9090L SH ,9050L H ,9090L H T4 ,9070L H ,9070L L ,9050L L ,9040L ,9060L GE ,9060L H ,9060L SH ,9070M ,9040M ,9090X O H T4 ,9090X GE ,9090X ,9090X H ,9090X GE T4 ,9090X T4 ,9090X H T4 ,9090X O, 9090X O GE, 9090X O GE T3, 9090X GE T4 ,9090X T4 ,9090X T5 ,VL640 ,VL660 ,VX680 ,9060L ,9030L ,VL550 ,VL570 ,9090L GE ,VL6070 ,VL610 ,VL620 ,VL630 ,9090L H T5 ,9090L SH T4 ,9090X H H ,9090X GE T3 ,9090X T3 ,9090L T3 ,9090L SH T5 ,7030M H ,9050L SH ,9070L SH ,9070L L T5 ,

REF.290A

AGITAZIONE ASTA FLANGIA FORO ESAGONALE COMPATIBLE

Comp. 920017521

1620, 1620S, 2420, 2520, 2620, 2720, 7030L, 7030M, 7030M H, 8030L, 9030L, 9040L, 9040M, 9050L H, 9050L L, 9050L SH, 9060L, 9060L GE, 9060L H, 9060L SH, 9070L H, 9070L L, 9070L L T5, 9070L SH, 9070M, 9080L, 9080L GE, 9080L H, 9080L SH, 9090L, 9090L GE, 9090L H, 9090L H T4, 9090L H T5, 9090L SH, 9090L SH T4, 9090L SH T5, 9090L T3, 9090X, 9090X GE, 9090X GE T3, 9090X GE T4, 9090X GE T5, 9090X H, 9090X H H, 9090X H T4, 9090X O H T4, 9090X T3, 9090X T4, 9090X T5, SB33, SB35, SB36, SB52, SB53, SB54, SB55, SB56, SB58, SB60, SB62, SB64, SB65, VL5060, VL5080, VL5090, VL530, VL540, VL550, VL570, VL600, VL6040, VL6050, VL6060, VL6070, VL6080, VL6090, VL610, VL620, VL630, VL640, VL660, VM3080, VM3080 AL, VM3090, VM340, VM370, VM4090, VM460, VN2090, VN300, VX680, VX7090

REF.290B

AGITAZIONE ASTA FLANGIA FORO TONDO

Comp. 944025756

7030M, 7030M H, 8030L, 9040L, 9040M, 9050L H, 9050L L, 9050L SH, 9060L, 9060L GE, 9060L H, 9060L SH, 9070L H, 9070L L, 9070L L T5, 9070L SH, 9070M, 9080L, 9080L GE, 9080L H, 9080L SH, 9090L, 9090L GE, 9090L H, 9090L H T4, 9090L H T5, 9090L SH, 9090L SH T4, 9090L SH T5, 9090L T3, 9090X, 9090X GE, 9090X GE T3, 9090X GE T4, 9090X GE T5, 9090X H, 9090X H H, 9090X H T4, 9090X O, 9090X O GE, 9090X O GE T3, 9090X O GE T4, 9090X O GE T5, 9090X O H T4, 9090X O T3, 9090X O T4, 9090X O T5, 9090X OP, 9090X OP GE, 9090X T3, 9090X T4, 9090X T5, VL5060, VL5080, VL5090, VL530, VL540, VL550, VL570, VL6040, VL6050, VL6060, VL6070, VL6080, VL6090, VL610, VL620, VL630, VL640, VL660, VM3080, VM3080 AL, VM3090, VM370, VM4090, VM460, VN2090, VX680, VX7090

REF.291A

ACCIAIO INOX AGITAZIONE ASTA FISSAGGIO PIASTRA

Comp. 944007696

1620, 1620S, 2420, 2520, 2620, 2720, 7030L, 7030M, 7030M H, 8030L, 9030L, 9040L, 9040M, 9050L H, 9050L L, 9050L SH, 9060L, 9060L GE, 9060L H, 9060L SH, 9070L H, 9070L L, 9070L L T5, 9070L SH, 9070M, 9080L, 9080L GE, 9080L H, 9080L SH, 9080N H, 9080N L, 9090L, 9090L GE, 9090L H, 9090L H T4, 9090L H T5, 9090L SH, 9090L SH T4, 9090L SH T5, 9090L T3, 9090X, 9090X GE, 9090X GE T3, 9090X GE T4, 9090X GE T5, 9090X H, 9090X H H, 9090X H T4, 9090X O, 9090X O GE, 9090X O GE T3, 9090X O GE T4, 9090X O GE T5, 9090X O H T4, 9090X O T3, 9090X O T4, 9090X O T5, 9090X OP, 9090X OP GE, 9090X T3, 9090X T4, 9090X T5, SB33, SB35, SB36, SB52, SB53, SB54, SB55, SB56, SB58, SB60, SB62, SB64, SB65, VL5060, VL5080, VL5090, VL530, VL540, VL550, VL570, VL600, VL6040, VL6050, VL6060, VL6070, VL6080, VL6090, VL610, VL620, VL630, VL640, VL660, VM3080, VM3080 AL, VM3090, VM340, VM370, VM4090, VM460, VN2080, VN2090, VN240, VN260, VN300, VX680, VX7090

REF.292A

ACCIAIO INOX BIELLA PLATE

Comp. 944027125

7030L, 7030M, 7030M H, 8030L, 9030L, 9040L, 9040M, 9050L H, 9050L L, 9050L SH, 9060L, 9060L GE, 9060L H, 9060L SH, 9070L H, 9070L L, 9070L L T5, 9070L SH, 9070M, 9080L, 9080L GE, 9080L H, 9080L SH, 9090L, 9090L GE, 9090L H, 9090L H T4, 9090L H T5, 9090L SH, 9090L SH T4, 9090L SH T5, 9090L T3, 9090X, 9090X GE, 9090X GE T3, 9090X GE T4, 9090X GE T5, 9090X H, 9090X H H, 9090X H T4, 9090X O, 9090X O GE, 9090X O GE T3, 9090X O GE T4, 9090X O GE T5, 9090X O H T4, 9090X O T3, 9090X O T4, 9090X O T5, 9090X OP, 9090X OP GE, 9090X T3, 9090X T4, 9090X T5, SB33, SB35, SB53, SB55, VL5060, VL5080, VL5090, VL530, VL540, VL550, VL570, VL600, VL6040, VL6050, VL6060, VL6070, VL6080, VL6090, VL610, VL620, VL630, VL640, VL660, VM3080, VM3080 AL, VM3090, VM340, VM370, VM4090, VM460, VX680, VX7090

REF.297A

PROTEZIONE AGITAZIONE ROD NEW sup

Comp. 944026496

7030L, 7030M, 7030M H, 8030L, 9030L, 9040L, 9040M, 9050L H, 9050L L, 9050L SH, 9060L, 9060L GE, 9060L H, 9060L SH, 9070L H, 9070L L, 9070L L T5, 9070L SH, 9070M, 9080L, 9080L GE, 9080L H, 9080L SH, 9090L, 9090L GE, 9090L H, 9090L H T4, 9090L H T5, 9090L SH, 9090L SH T4, 9090L SH T5, 9090L T3, 9090X, 9090X GE, 9090X GE T3, 9090X GE T4, 9090X GE T5, 9090X H, 9090X H H, 9090X H T4, 9090X O, 9090X O GE, 9090X O GE T3, 9090X O GE T4, 9090X O GE T5, 9090X O H T4, 9090X O T3, 9090X O T4, 9090X O T5, 9090X OP, 9090X OP GE, 9090X T3, 9090X T4, 9090X T5, VL5060, VL5080, VL5090, VL530, VL540, VL550, VL570, VL600, VL6040, VL6050, VL6060, VL6070, VL6080, VL6090, VL610, VL620, VL630, VL640, VL660, VM3080, VM3080 AL, VM3090, VM340, VM370, VM4090, VM460, VN2090, VX680, VX7090

REF.298A

SUPPORTO PER BOLT 2 VITI

Comp. 944026586

7030L, 8030L, 9030L, 9040L, 9050L L, 9060L, 9070L L, 9070L L T5, 9090L T3, 9090X GE T3, 9090X GE T4, 9090X GE T5, 9090X H T4, 9090X T3, 9090X T4, 9090X T5, SB33, SB35, SB53, SB55, VL5060, VL530, VL540, VL600, VL6040

REF.717A

SOSTEGNO NON FINALE

Comp. 944005665

7030L, 7030M, 7030M H, 8030L, 9030L, 9040L, 9040M, 9050L H, 9050L L, 9060L, 9060L GE, 9060L H, 9070L H, 9070L L, 9070L L T5, 9070M, 9080L, 9080L GE, 9080L H, 9090L, 9090L GE, 9090L H, 9090L H T4, 9090L H T5, 9090L T3, 9090X, 9090X GE, 9090X GE T3, 9090X GE T4, 9090X GE T5, 9090X H, 9090X H H, 9090X H T4, 9090X O, 9090X O GE, 9090X O GE T3, 9090X O GE T4, 9090X O GE T5, 9090X O H T4, 9090X O T3, 9090X O T4, 9090X O T5, 9090X OP, 9090X OP GE, 9090X T3, 9090X T4, 9090X T5, SB33, SB35, SB36, SB53, SB55, SB56, SB58, SB60, SB62, SB64, SB65, VL5060, VL5080, VL5090, VL530, VL540, VL550, VL570, VL600, VL6040, VL6050, VL6060, VL6070, VL6080, VL6090, VL610, VL620, VL630, VL640, VL660, VM3080, VM3080 AL, VM3090, VM340, VM370, VM4090, VM460, VN2090, VN260, VN300, VX680, VX7090

IVA non inclusa

Trasporto UE gratuito per ordini 500€

Tutti i marchi appartengono ai rispettivi proprietari e il loro utilizzo è solo a scopo informativo.

WWW.EDUARDOREPUESTOSAGRICOLAS.COM

Controllare Rif. Prima.

NEW HOLLAND-BRAUD COMPATIBLE

EDUARDO

REF.293A

COPERTURA CINGHIA VL / VM / VX / SB (600mm x di 1,145 millimetri) 14 fori

Comp. 944026645,,944009230

SB36, SB56, SB58, SB60, SB62, SB64, SB65, VL600, VL6040, VL6050, VL6060, VL6070, VL6080, VL6090, VL610, VL620, VL630, VL640, VL660, VM4090, VM460, VX680, VX7090

REF.293B

COPERTURA CINGHIA SB33 / 35/53/55 (450 millimetri) x1145mm 1 canale 10 fori

Comp. 944010278

SB33, SB35, SB53, SB55

REF.293C

COPERTURA CINGHIA VL9000L/9000X (700 millimetri x 1,327 millimetri) 17 buche

Comp. 84193392

9030L, 9040L, 9050L H, 9050L L, 9060L, 9060L GE, 9060L H, 9060L SH, 9070L H, 9070L L, 9070L L T5, 9080L, 9080L GE, 9080L H, 9080L SH, 9090L, 9090L H, 9090L H T4, 9090L H T5, 9090L T3, 9090X, 9090X H, 9090X H T4, 9090X T3, 9090X T4, 9090X T5

REF.293D

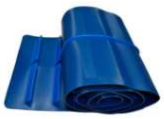

Coperchio cinghia 9090 OLIO CENTRALE (450mmx2.155mm) 10 fori

Comp. 84321610

9090X O, 9090X O GE, 9090X O GE T3, 9090X O GE T4, 9090X O GE T5, 9090X O H T4, 9090X O T3, 9090X O T4, 9090X O T5, 9090X OP, 9090X OP GE, VX7090

REF.293E

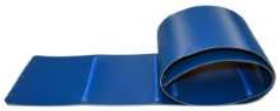

COPERTURA CINGHIA 9090 OLIO LATERALE (225 millimetri x 1,690 millimetri) 5 fori

Comp. 84324465

9090X O, 9090X O H T4, 9090X O T3, 9090X O T4, 9090X O T5, 9090X OP, VX7090

REF.293G

ROLL TAPE 2 strati (3,2 millimetri) 450mm x 1m

Comp. -

1214, 1620, 1620S, 2414, 2420, 2514, 2520, 2614, 2620, 2714, 2720, 7030L, 7030M, 7030M H, 8030L, 9030L, 9040L, 9040M, 9050L H, 9050L L, 9050L SH, 9060L, 9060L GE, 9060L H, 9060L SH, 9070L H, 9070L L, 9070L L T5, 9070L SH, 9070M, 9080L, 9080L GE, 9080L H, 9080L SH, 9080N H, 9080N L, 9090L, 9090L GE, 9090L H, 9090L H T4, 9090L H T5, 9090L SH, 9090L SH T4, 9090L SH T5, 9090L T3, 9090X, 9090X GE, 9090X GE T3, 9090X GE T4, 9090X GE T5, 9090X H, 9090X H H, 9090X H T4, 9090X O, 9090X O GE, 9090X O GE T3, 9090X O GE T4, 9090X O GE T5, 9090X O H T4, 9090X O T3, 9090X O T4, 9090X O T5, 9090X OP, 9090X OP GE, 9090X T3, 9090X T4, 9090X T5, SB33, SB35, SB36, SB52, SB53, SB54, SB55, SB56, SB58, SB60, SB62, SB64, SB65, VL5060, VL5080, VL5090, VL530, VL540, VL550, VL570, VL600, VL6040, VL6050, VL6060, VL6070, VL6080, VL6090, VL610, VL620, VL630, VL640, VL660, VM3080, VM3080 AL, VM3090, VM340, VM370, VM4090, VM460, VN2080, VN2090, VN240, VN260, VN300, VX680, VX7090

REF.293I

COPERTURA CINGHIA SB52 / 54 canali (450mmx1145mm) 2 estremi inf.10 fori.

Comp. 913475510

1214, 1620, 1620S, 2414, 2420, 2514, 2520, 2614, 2620, 2714, 2720, SB52, SB54

REF.293N

COPERTURA CINGHIA (7(600mm x 1.310) 14 buche

Comp. 84358254

8030 L, 8030 L T5, 9060 L SH, 9080 L SH, 9090 L SH

REF.293K

ISCRIZIONE

Comp. 944027604

SB56, SB58, SB60, SB62, SB64, VL600, VL6040, VL6050, VL6060, VL6070, VL6080, VL6090, VL610, VL620, VL630, VL640, VL660, VM4090, VM460, VX680, VX7090

REF.293L

ROLL TAPE 3 strati (4,2 millimetri) 450mm x 1m

Comp. -

1214, 1620, 1620S, 2414, 2420, 2514, 2520, 2614, 2620, 2714, 2720, 7030L, 7030M, 7030M H, 8030L, 9030L, 9040L, 9040M, 9050L H, 9050L L, 9050L SH, 9060L, 9060L GE, 9060L H, 9060L SH, 9070L H, 9070L L, 9070L L T5, 9070L SH, 9070M, 9080L, 9080L GE, 9080L H, 9080L SH, 9080N H, 9080N L, 9090L, 9090L GE, 9090L H, 9090L H T4, 9090L H T5, 9090L SH, 9090L SH T4, 9090L SH T5, 9090L T3, 9090X, 9090X GE, 9090X GE T3, 9090X GE T4, 9090X GE T5, 9090X H, 9090X H H, 9090X H T4, 9090X O, 9090X O GE, 9090X O GE T3, 9090X O GE T4, 9090X O GE T5, 9090X O H T4, 9090X O T3, 9090X O T4, 9090X O T5, 9090X OP, 9090X OP GE, 9090X T3, 9090X T4, 9090X T5, SB33, SB35, SB36, SB52, SB53, SB54, SB55, SB56, SB58, SB60, SB62, SB64, SB65, VL5060, VL5080, VL5090, VL530, VL540, VL550, VL570, VL600, VL6040, VL6050, VL6060, VL6070, VL6080, VL6090, VL610, VL620, VL630, VL640, VL660, VM3080, VM3080 AL, VM3090, VM340, VM370, VM4090, VM460, VN2080, VN2090, VN240, VN260, VN300, VX680, VX7090

REF.293M

COPERTURA CINGHIA (700 millimetri x 1,135 millimetri) 17 buche

Comp. 84193393

9040M, 9060L GE, 9070M, 9080L GE, 9090L GE, 9090X GE, 9090X H H

REF.294B

CINTURA COMUNE 14 buche (acciaio)

Comp. 944005402

8030L, 9050L SH, 9060L SH, 9070L SH, 9080L SH, 9090L SH, 9090L SH T4, 9090L SH T5, SB36, SB56, SB58, SB60, SB62, SB64, SB65, VL600, VL6040, VL6050, VL6060, VL6070, VL6080, VL6090, VL610, VL620, VL630, VL640, VL660, VM4090, VM460, VX680, VX7090

REF.294C

CINTURA COMUNE 10 buche (acciaio)

Comp. 944010278

SB33, SB35, SB53, SB55

REF.294D

CINTURA COMUNE 17 buche (acciaio)

Comp. 47374088

9090X, 9090X H

REF.294E

CINTURA COMUNE 5 FORI (acciaio)

Comp. 944035544

9090X O, 9090X O GE, 9090X O GE T3, 9090X O GE T4, 9090X O GE T5, 9090X O H T4, 9090X O T3, 9090X O T4, 9090X O T5, 9090X OP, 9090X OP GE, VN2080, VX7090

REF.294F

NASTRO TRASPORTATORE Barra di fissaggio 14 buche (allume)

Comp. 944005400

8030L, 9050L SH, 9060L SH, 9070L SH, 9080L SH, 9090L SH, 9090L SH T4, 9090L SH T5, SB36, SB56, SB58, SB60, SB62, SB64, SB65, VL600, VL6040, VL6050, VL6060, VL6070, VL6080, VL6090, VL610, VL620, VL630, VL640, VL660, VM4090, VM460, VX680, VX7090

REF.294G

NASTRO TRASPORTATORE Barra di fissaggio 10 buche (allume)

Comp. 944010278

SB33, SB35, SB53, SB55

REF.294H

NASTRO TRASPORTATORE Barra di fissaggio 17 buche (allume)

Comp. 84199474

9030L, 9040L, 9040M, 9050L H, 9050L L, 9060L, 9060L GE, 9060L H, 9070L H, 9070L L, 9070L L T5, 9070M, 9080L, 9080L GE, 9080L H, 9090L, 9090L GE, 9090L H, 9090L H T4, 9090L H T5, 9090L T3, 9090X, 9090X GE, 9090X GE T3, 9090X GE T4, 9090X GE T5, 9090X H, 9090X H H, 9090X H T4, 9090X T3, 9090X T4, 9090X T5

REF.294I

NASTRO TRASPORTATORE Barra di fissaggio 5 FORI (allume)

Comp. 944035543

9090X O, 9090X O GE, 9090X O GE T3, 9090X O GE T4, 9090X O GE T5, 9090X O H T4, 9090X O T3, 9090X O T4, 9090X O T5, 9090X OP, 9090X OP GE, VN2080, VX7090

REF.502B

VITE + DADO autoblocant DELL'UNIONE CONVER CINTURA M5-20MM

Comp. 10978280+920008123

1214, 1620, 1620S, 2414, 2420, 2514, 2520, 2614, 2620, 2714, 2720, 7030L, 7030M, 7030M H, 8030L, 9030L, 9040L, 9040M, 9050L H, 9050L L, 9050L SH, 9060L, 9060L GE, 9060L H, 9060L SH, 9070L H, 9070L L, 9070L L T5, 9070L SH, 9070M, 9080L, 9080L GE, 9080L H, 9080L SH, 9080N H, 9080N L, 9090L, 9090L GE, 9090L H, **9090L H T4, 9090L H T5, 9090L SH, 9090L SH T4, 9090L SH T5, 9090L T3, 9090X, 9090X GE, 9090X GE T3,** 9090X GE T4, 9090X GE T5, 9090X H, 9090X H H, 9090X H T4, 9090X O, 9090X O GE, 9090X O GE T3, 9090X O GE T4, 9090X O GE T5, 9090X O H T4, 9090X O T3, 9090X O T4, 9090X O T5, 9090X OP, 9090X OP GE, 9090X T3, 9090X T4, 9090X T5, SB33, SB35, SB36, SB52, SB53, SB54, SB55, SB56, SB58, SB60, SB62, SB64, SB65, VL5060, VL5080, VL5090, VL530, VL540, VL550, VL570, VL600, VL6040, VL6050, VL6060, VL6070, VL6080, VL6090, VL610, VL620, VL630, VL640, VL660, VM3080, VM3080 AL, VM3090, VM340, VM370, VM4090, VM460, VN2080, VN2090, VN240, VN260, VN300, VX680, VX7090,0,2

Controllare Rif. Prima.

Tutti i marchi appartengono ai rispettivi proprietari e il loro utilizzo è solo a scopo informativo.

WWW.EDUARDOREPUESTOSAGRICOLAS.COM

IVA non inclusa

Trasporto UE gratuito per ordini 500€

NEW HOLLAND-BRAUD COMPATIBLE

EDUARDO

REF.295A

RULLO DRIVE PER 600 MM CINTURA

Comp. 944005403

SB36, SB56, SB58, SB60, SB62, SB64, SB65, VL600, VL6040, VL6050, VL6060, VL6070, VL6080, VL6090, VL610, VL620, VL630, VL640, VL660, VM4090, VM460, VX680, VX7090

REF.295B

RULLO inattivo per 600 MM CINTURA

Comp. 944034674

VL600, VL6040, VL6050, VL6060, VL6070, VL6080, VL6090, VL610, VL620, VL630, VL640, VL660, VM4090, VM460, VX680, VX7090

REF.295C

ROLLER DRIVE PER 450 MM CINTURA

Comp. 944010279

7030M, 7030M H, 8030L, 9090X O, 9090X O GE, 9090X O GE T3, 9090X O GE T4, 9090X O GE T5, 9090X O H T4, 9090X O T3, 9090X O T4, 9090X O T5, 9090X OP, 9090X OP GE, SB33, SB35, SB53, SB55, SB65, VL5060, VL5080, VL5090, VL530, VL540, VL550, VL570, VM3080, VM3080 AL, VM3090, VM340, VM370, VN2080, VN2090, VN300, VX7090

REF.295P

ROLLER inattivo per 450 MM CINTURA

Comp. 944034672

7030M, 7030M H, 8030L, 9060L GE, 9080L GE, 9090L GE, 9090X GE, 9090X O, 9090X O GE, 9090X O GE T3, 9090X O GE T4, 9090X O GE T5, 9090X O H T4, 9090X O T3, 9090X O T4, 9090X O T5, 9090X OP, 9090X OP GE, VL5060, VL5080, VL5090, VL530, VL540, VL550, VL570, VM3080, VM3080 AL, VM3090, VM340, VM370, VN2080, VN2090, VN300, VX7090

REF.295Q

RULLO DRIVE PER 700 MM CINTURA

Comp. 84193395

9030L, 9040L, 9040M, 9050L H, 9050L L, 9060L, 9060L GE, 9060L H, 9070L H, 9070L L, 9070L L T5, 9070M, 9080L, 9080L GE, 9080L H, 9090L, 9090L GE, 9090L H, 9090L H T4, 9090L H T5, 9090L T3, 9090X, 9090X GE, 9090X GE T3, 9090X GE T4, 9090X GE T5, 9090X H, 9090X H H, 9090X H T4, 9090X T3, 9090X T4, 9090X T5

REF.295R

RULLO inattivo per 700 mm CINTURA

Comp. 84193394

9030L, 9040L, 9040M, 9050L H, 9050L L, 9060L, 9060L GE, 9060L H, 9070L H, 9070L L, 9070L L T5, 9070M, 9080L, 9080L GE, 9080L H, 9090L, 9090L GE, 9090L H, 9090L H T4, 9090L H T5, 9090L T3, 9090X, 9090X GE, 9090X GE T3, 9090X GE T4, 9090X GE T5, 9090X H, 9090X H H, 9090X H T4, 9090X T3, 9090X T4, 9090X T5

REF.295S

RULLO DRIVE PER 225 MM CINTURA

Comp. 944035528

9090X O, 9090X O GE T3, 9090X O H T4, 9090X O T3, 9090X O T4, 9090X O T5, 9090X OP, VN2080, VX7090

REF.295T

RULLO inattivo per 225 MM CINTURA

Comp. 84343365

9090X O, 9090X O GE, 9090X O GE T3, 9090X O GE T4, 9090X O GE T5, 9090X O H T4, 9090X O T3, 9090X O T4, 9090X O T5, 9090X OP, 9090X OP GE, VX7090

REF.295D

RULLI DRIVE PER 450 MM CINGHIA, MODELLI SB52 / 54

Comp. 913308630

1214, 1620, 1620S, 2414, 2420, 2514, 2520, 2614, 2620, 2714, 2720, SB52, SB54

REF.547A

GOMMA REGOLAMENTO DI PULIZIA

Comp. 944005421 / 84196271

SB36, SB56, SB58, SB60, SB62, SB64, SB65, VL600, VL6040, VL6050, VL6060, VL6070, VL6080, VL6090, VL610, VL620, VL630, VL640, VL660, VM4090, VM460, VX680, VX7090

REF.547B

GOMMA BIB (SB64,60,58,65)

Comp. 944005420

SB33, SB35, SB36, SB53, SB55, SB56, SB58, SB60, SB62, SB64, SB65, VN240, VN260

REF.556A

RULLO CENTRALE DETERGENTE

Comp. 944005399

7030L, 7030M, 7030M H, 8030L, 9030L, 9040L, 9040M, 9050L H, 9050L L, 9050L SH, 9060L, 9060L GE, 9060L H, 9060L SH, 9070L H, 9070L L, 9070L L T5, 9070L SH, 9070M, 9080L, 9080L GE, 9080L H, 9080L SH, 9080N H, 9080N L, 9090L, 9090L GE, 9090L H, 9090L H T4, 9090L H T5, 9090L SH, 9090L SH T4, 9090L SH T5, 9090L T3, 9090X, 9090X GE, 9090X GE T3, 9090X GE T4, 9090X GE T5, 9090X H, 9090X H H, 9090X H T4, 9090X T3, 9090X T4, 9090X T5, SB33, SB35, SB36, SB53, SB55, SB56, SB58, SB60, SB62, SB64, SB65, VL5060, VL5080, VL5090, VL530, VL540, VL550, VL570, VL600, VL6040, VL6050, VL6060, VL6070, VL6080, VL6090, VL610, VL620, VL630, VL640, VL660, VM3080, VM3080 AL, VM3090, VM340, VM370, VM4090, VM460, VN2080, VN2090, VN240, VN260, VN300, VX680, VX7090

REF.557A

sinfín RIDUTTORE

Comp. 84248099

VL6040

REF.570A

Ø25 MM CUSCINETTO SFERA CON ANELLO PER CROCE CINGHIA (

Comp. 920019044

1214, 1620, 1620S, 2414, 2420, 2514, 2520, 2614, 2620, 2714, 2720, 7030L, 7030M, 7030M H, 8030L, 9030L, 9040L, 9040M, 9050L H, 9050L L, 9050L SH, 9060L, 9060L GE, 9060L H, 9060L SH, 9070L H, 9070L L, 9070L L T5, 9070L SH, 9070M, 9080L, 9080L GE, 9080L H, 9080L SH, 9080N H, 9080N L, 9090L, 9090L GE, 9090L H, 9090L H T4, 9090L H T5, 9090L SH, 9090L SH T4, 9090L SH T5, 9090L T3, 9090X, 9090X GE, 9090X GE T3, 9090X GE T4, 9090X GE T5, 9090X H, 9090X H H, 9090X H T4, 9090X O GE, 9090X O GE T3, 9090X O GE T4, 9090X O GE T5, 9090X OP GE, 9090X T3, 9090X T4, 9090X T5, SB33, SB35, SB36, SB52, SB53, SB54, SB55, SB56, SB58, SB60, SB62, SB64, SB65, T140, T240, TB10, TB15, VL5060, VL5080, VL5090, VL530, VL540, VL550, VL570, VL600, VL6040, VL6050, VL6060, VL6070, VL6080, VL6090, VL610, VL620, VL630, VL640, VL660, VM3080, VM3080 AL, VM3090, VM340, VM370, VM4090, VM460, VN2080, VN2090, VN240, VN260, VN300, VX680, VX7090

REF.570L

Ø20x14 mm CUSCINETTO SFERA DIRASPATRICE

Comp. 84287484

7030M, 7030M H, 8030L, 9040L, 9040M, 9060L, 9060L GE, 9060L H, 9060L SH, 9080L, 9080L GE, 9080L H, 9080L SH, 9090L, 9090L GE, 9090L H, 9090L SH, 9090X, 9090X GE, 9090X H, 9090X H H, SB33, SB35, SB36, SB52, SB53, SB54, SB55, SB56, SB58, SB60, SB62, SB64, SB65, VL5060, VL5080, VL5090, VL530, VL540, VL550, VL570, VL600, VL6040, VL6050, VL6060, VL6070, VL6080, VL6090, VL610, VL620, VL630, VL640, VL660, VM3080, VM3080 AL, VM3090, VM340, VM370, VM4090, VM460, VN2090, VN300, VX680, VX7090

REF.570M

Ø30x18mm CUSCINETTO SFERA SIGILLANTE SUPPORTO MOTORE

Comp. 84287487

7030M, 7030M H, 8030L, 9040L, 9040M, 9060L, 9060L GE, 9060L H, 9060L SH, 9080L, 9080L GE, 9080L H, 9080L SH, 9090L, 9090L GE, 9090L H, 9090L SH, 9090X, 9090X GE, 9090X H, 9090X H H, SB33, SB35, SB36, SB52, SB53, SB54, SB55, SB56, SB58, SB60, SB62, SB64, SB65, VL5060, VL5080, VL5090, VL530, VL540, VL550, VL570, VL600, VL6040, VL6050, VL6060, VL6070, VL6080, VL6090, VL610, VL620, VL630, VL640, VL660, VM3080, VM3080 AL, VM3090, VM340, VM370, VM4090, VM460, VN2090, VN300, VX680, VX7090

REF.579A

PROTEZIONI TAPE

Comp. 920019046

7030L, 7030M, 7030M H, 8030L, 9030L, 9040L, 9040M, 9050L H, 9050L L, 9050L SH, 9060L, 9060L GE, 9060L H, 9060L SH, 9070L H, 9070L L, 9070L L T5, 9070L SH, 9070M, 9080L, 9080L GE, 9080L H, 9080L SH, 9080N H, 9080N L, 9090L, 9090L GE, 9090L H, 9090L H T4, 9090L H T5, 9090L SH, 9090L SH T4, 9090L SH T5, 9090L T3, **9090X, 9090X GE, 9090X GE T3, 9090X GE T4, 9090X GE T5, 9090X H, 9090X H H, 9090X H T4, 9090X O,** 9090X O GE T3, 9090X O T3, 9090X O T4, 9090X OP, 9090X T3, 9090X T4, 9090X T5, SB33, SB35, SB53, SB55, SB65, T140, T240, VL5060, VL5080, VL5090, VL530, VL540, VL550, VL570, VL600, VL6040, VL6050, VL6060, VL6070, VL6080, VL6090, VL610, VL620, VL630, VL640, VL660, VM3080, VM3080 AL, VM3090, VM340, VM370, VM4090, VM460, VN2080, VN2090, VN300, VX680, VX7090

REF.721A

PENNELLO TUBO

Comp. 944031640

9090X GE T3, 9090X GE T4, 9090X GE T5, SB33, SB35, SB53, SB55, VL5060, VL5080, VL5090, VL530, VL540, VL550, VL570, VL600, VL6040, VL6050, VL6060, VL6070, VL6080, VL6090, VL610, VL620, VL630, VL640, VL660, VM3080, VM3090, VM340, VM370, VM4090, VM460, VX7090

REF.727A

PIGNONE 25 DENTI

Comp. 87532045,9440002

7030L, 9030L, 9050L L, 9070L L, 9070L L T5, 9090L T3, 9090X, 9090X GE, 9090X GE T3, 9090X GE T4, 9090X GE T5, 9090X H, 9090X H H, 9090X H T4, 9090X T3, 9090X T4, 9090X T5, VL5060, VM3080, VX7090

REF.728A

ELECTROVALVULA SOLENOIDE

Comp. 920018591

SB33, SB35, SB36, SB52, SB53, SB54, SB55, SB56, SB58, SB60, SB62, SB64, SB65, TB10, TB15

IVA non inclusa

Trasporto UE gratuito per ordini 500€

Tutti i marchi appartengono ai rispettivi proprietari e il loro utilizzo è solo a scopo informativo.

WWW.EDUARDOREPUESTOSAGRICOLAS.COM

Controllare Rif. Prima.

NEW HOLLAND-BRAUD COMPATIBLE

EDUARDO

REF.213B

GRANDE FINGER DIRASPATORE

Comp. 944027438

9030L, 9040L, 9040M, 9050L H, 9050L L, 9050L SH, 9060L, 9060L GE, 9060L H, 9060L SH, 9070L H, 9070L L, 9070L L T5, 9070L SH, 9070M, 9080L, 9080L GE, 9080L H, 9080L SH, 9080N H, 9080N L, 9090L, 9090L GE, 9090L H, 9090L H T4, 9090L H T5, 9090L SH T4, 9090L SH T5, 9090L T3, 9090X, 9090X GE T3, 9090X GE T4, 9090X GE T5, 9090X H, 9090X H H, 9090X H T4, 9090X T3, 9090X T4, 9090X T5, SB36, SB56, SB58, SB60, SB62, SB64, SB65, VL600, VL6040, VL6050, VL6060, VL6070, VL6080, VL6090, VL610, VL620, VL630, VL640, VL660, VM4090, VM460, VX680, VX7090

REF.213D

STANDARD DIRASPATORE DITO

Comp. 87681134

7030L, 7030M, 7030M H, 8030L, 9030L, 9040L, 9040M, 9050L H, 9050L L, 9050L SH, 9060L, 9060L GE, 9060L H, 9060L SH, 9070L H, 9070L L, 9070L L T5, 9070L SH, 9070M, 9080L, 9080L GE, 9080L H, 9080L SH, 9080N H, 9080N L, 9090L, 9090L GE, 9090L H, 9090L H T4, 9090L H T5, 9090L SH T4, 9090L SH T5, 9090L T3, 9090X, 9090X GE T3, 9090X GE T4, 9090X GE T5, 9090X H, 9090X H H, 9090X H T4, 9090X T3, 9090X T4, 9090X T5, SB33, SB35, SB53, SB55, VL5060, VL5080, VL5090, VL530, VL540, VL550, VL570, VM3080, VM3080 AL, VM3090, VM340, VM370, VN2080, VN2090, VN300

REF.214B

CINTURA PIN (rosa)

Comp. -

9030L, 9040L, 9040M, 9050L H, 9050L L, 9060L, 9060L GE, 9060L H, 9070L H, 9070L L, 9070L L T5, 9070M, 9080L, 9080L GE, 9080L H, 9090L, 9090L GE, 9090L H, 9090L H T4, 9090L H T5, 9090L T3, 9090X, 9090X GE T3, 9090X GE T4, 9090X GE T5, 9090X H, 9090X H H, 9090X H T4, 9090X T3, 9090X T4, 9090X T5, VL5060, VL5080, VL5090, VM3080, VM3090, VX7090

REF.214C

CINTURA PIN (PINK) 0,2mm SPESSA

Comp. 944027440

9030L, 9040L, 9040M, 9050L H, 9050L L, 9060L, 9060L GE, 9060L H, 9070L H, 9070L L, 9070L L T5, 9070M, 9080L, 9080L GE, 9080L H, 9090L, 9090L GE, 9090L H, 9090L H T4, 9090L H T5, 9090L T3, 9090X, 9090X GE T3, 9090X GE T4, 9090X GE T5, 9090X H, 9090X H H, 9090X H T4, 9090X T3, 9090X T4, 9090X T5, VL5060, VL5080, VL5090, VM3080, VM3090, VX7090

REF.295Z

PORTA FINGER DIRASPATORE

Comp. 944027439

7030L, 7030M, 7030M H, 8030L, 9030L, 9040L, 9040M, 9050L H, 9050L L, 9050L SH, 9060L, 9060L GE, 9060L H, 9060L SH, 9070L H, 9070L L, 9070L L T5, 9070L SH, 9070M, 9080L, 9080L GE, 9080L H, 9080L SH, 9080N H, 9080N L, 9090L, 9090L GE, 9090L H, 9090L H T4, 9090L H T5, 9090L SH T4, 9090L SH T5, 9090L T3, 9090X, 9090X GE T3, 9090X GE T4, 9090X GE T5, 9090X H, 9090X H H, 9090X H T4, 9090X T3, 9090X T4, 9090X T5, SB33, SB35, SB36, SB53, SB55, SB56, SB58, SB60, SB62, SB64, VL5060, VL5080, VL5090, VL530, VL540, VL550, VL570, VL600, VL6040, VL6050, VL6060, VL6070, VL6080, VL6090, VL610, VL620, VL630, VL640, VL660, VM3080, VM3080 AL, VM3090, VM340, VM370, VM4090, VM460, VN2080, VN2090, VN300, VX680, VX7090

REF.296A

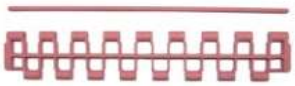

Cinghia della maglia + PIN (rosa)

Comp. 944027670, 944027440

9030L, 9040L, 9040M, 9050L H, 9050L L, 9060L, 9060L GE, 9060L H, 9060L SH, 9070L H, 9070L L, 9070L L T5, 9070M, 9080L, 9080L GE, 9080L H, 9080L SH, 9090L, 9090L GE, 9090L H, 9090L H T4, 9090L H T5, 9090L T3, 9090X, 9090X GE T3, 9090X GE T4, 9090X GE T5, 9090X H, 9090X H H, 9090X H T4, 9090X O GE, 9090X O GE T4, 9090X O H T4, 9090X O T4, 9090X OP, 9090X OP GE, 9090X T3, 9090X T4, 9090X T5, SB33, SB35, SB36, SB53, SB55, SB56, SB58, SB60, SB62, SB64, VL5060, VL5080, VL5090, VL530, VL540, VL550, VL570, VL600, VL6040, VL6050, VL6060, VL6070, VL6080, VL6090, VL610, VL620, VL630, VL640, VL660, VM3080, VM3080 AL, VM3090, VM340, VM370, VM4090, VM460, VN2080, VN2090, VX680, VX7090

REF.296C

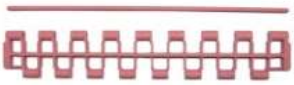

Cinghia della maglia + PIN (PINK) COMPLET VL / VX 92 SET

Comp. 944031438

9030L, 9040L, 9040M, 9050L H, 9050L L, 9060L, 9060L GE, 9060L H, 9070L H, 9070L L, 9070L L T5, 9070M, 9080L, 9080L GE, 9080L H, 9090L, 9090L GE, 9090L H, 9090L H T4, 9090L H T5, 9090X, 9090X GE T4, 9090X H, 9090X H H, 9090X H T4, 9090X O GE, 9090X O GE T4, 9090X O H T4, 9090X O T4, 9090X OP, 9090X OP GE, 9090X T3, 9090X T4, 9090X T5, SB33, SB35, SB36, SB53, SB55, SB56, SB58, SB60, SB62, SB64, VL5060, VL5080, VL5090, VL530, VL540, VL550, VL570, VL600, VL6040, VL6050, VL6060, VL6070, VL6080, VL6090, VL610, VL620, VL630, VL640, VL660, VM3080, VM3080 AL, VM3090, VM340, VM370, VM4090, VM460, VN2080, VN2090, VX680, VX7090

REF.296D

Cinghia della maglia BIANCO PIÙ APERTO + PIN

Comp. 47859604

9050L H, 9090L H T4, 9070L H, 9070L L, 9050L L, 9070M, 9090X GE T4, 9090X T4, 9090X HEAD T4, 9090X GE T5, 9090X T5, 9030L, 9090L H T5, 9090X GE T3, 9090X T3, 9090L T3, 9070L L T5, 9070M T5, 9030L T5, 9070L H T5, 9050L H T5, 9050L L T5

REF.296E

Cinghia della maglia BLU PIÙ VICINO + PIN

Comp. 51613223

9050L H, 9090L H T4, 9070L H, 9070L L, 9050L L, 9070M, 9090X GE T5, 9090X T5, 9030L, 9090L H T5, 9090X GE T3, 9090X T3, 9090L T3, 9070L L T5, 9070M T5, 9030L T5, 9070L H T5, 9050L H T5, 9050L L T5

REF.511A

CATENA TRASMISSIONE 60H 79 passi

Comp. 920019483, 920017691

9040L, 9060L, 9090L H, 9090X, 9090X GE, 9090X GE T3, 9090X GE T4, 9090X GE T5, 9090X H, 9090X H H, 9090X H T4, 9090X T3, 9090X T4, 9090X T5, SB65, VL5060, VL530, VL540, VL600, VL6040, VM3080, VM340, VX7090

REF.511B

CATENA TRASMISSIONE UNION 60H

Comp. -

9040L, 9060L, 9090L H, 9090X, 9090X GE, 9090X GE T3, 9090X GE T4, 9090X GE T5, 9090X H, 9090X H H, 9090X H T4, 9090X T3, 9090X T4, 9090X T5, SB65, VL5060, VL530, VL540, VL600, VL6040, VM3080, VM340, VX7090

REF.511C

HALF TRANSM. 60H mezzo passo

Comp. -

9040L, 9060L, 9090L H, 9090X, 9090X GE, 9090X GE T3, 9090X GE T4, 9090X GE T5, 9090X H, 9090X H H, 9090X H T4, 9090X T3, 9090X T4, 9090X T5, SB65, VL5060, VL530, VL540, VL600, VL6040, VM3080, VM340, VX7090,7,7

REF.548A

BLOCCA

Comp. 944000016

1620, 1620S, 2420, 2520, 2620, 2720, SB33, SB35, SB36, SB52, SB53, SB54, SB55, SB56, SB58, SB60, SB62, SB64, SB65, VL550, VL570, VL610, VL620, VL630, VL640, VL660, VM370, VM460, VX680

REF.549A

RUBBER STOP (700gr)

Comp. 920017480

1620, 1620S, 2420, 2520, 2620, 2720, SB36, SB52, SB54, SB56, SB58, SB60, SB62, SB64, SB65, VL5080, VL5090, VL550, VL570, VL600, VL6040, VL6050, VL6060, VL6070, VL6080, VL6090, VL610, VL620, VL630, VL640, VL660, VM3080 AL, VM3090, VM370, VM4090, VM460, VX680, VX7090

REF.549B

ANTI-VIBRAZIONE ISOLANTE PER SENSORE BRACCIO

Comp. 920019360

7030L, 8030L, 9030L, 9040L, 9040M, 9050L H, 9050L L, 9050L SH, 9060L, 9060L GE, 9060L H, 9060L SH, 9070L H, 9070L L, 9070L L T5, 9070L SH, 9070M, 9080L, 9080L GE, 9080L H, 9080L SH, 9090L, 9090L GE, 9090L H, 9090L H T4, 9090L H T5, 9090L SH, 9090L SH T4, 9090L SH T5, 9090L T3, 9090X, 9090X GE, 9090X GE T3, 9090X GE T4, 9090X GE T5, 9090X H, 9090X H H, 9090X H T4, 9090X T3, 9090X T4, 9090X T5, SB33, SB35, SB36, SB53, SB55, SB56, SB58, SB60, SB62, SB64, SB65, VL530, VL540, VL550, VL570, VL600, VL610, VL620, VL630, VL640, VL660, VM340, VM370, VM460, VX680, VX7090

REF.549C

ARRESTO GOMME (700gr)

Comp. 920019016

SB33, SB35, SB36, SB53, SB55, SB56, SB58, SB60, SB62, SB64, VL5060, VL530, VL540, VL600, VL6040, VM3080, VM340, VN2090, VN300

REF.549D

RUBBER STOP (700gr)

Comp. 920094157

1214, 1620, 1620S, SB33, SB35, SB53, SB55, VL5060, VL530, VL540, VM3080, VM340, VN2090, VN300

REF.550A*

COPERCHIO SUPERIORE

Comp. 944000412

1620, 1620S, 2420, 2520, 2620, 2720, SB33, SB35, SB36, SB52, SB53, SB54, SB55, SB56, SB58, SB60, SB62, SB64, SB65, VL5060, VL5080, VL5090, VL530, VL540, VL550, VL570, VL600, VL6040, VL6050, VL6060, VL6070, VL6080, VL6090, VL610, VL620, VL630, VL640, VL660, VM3080, VM3080 AL, VM3090, VM340, VM370, VM4090, VM460, VN2090, VN300, VX680, VX7090

REF.551A*

LOWER PAC

Comp. 944000413

1620, 1620S, 2420, 2520, 2620, 2720, SB36, SB52, SB54, SB56, SB58, SB60, SB62, SB64, SB65, VL5080, VL5090, VL550, VL570, VL600, VL6040, VL6050, VL6060, VL6070, VL6080, VL6090, VL610, VL620, VL630, VL640, VL660, VM3080 AL, VM3090, VM370, VM4090, VM460, VX680, VX7090

REF.551B*

LOWER PAC

Comp. 944000414

1620, 1620S, SB33, SB35, SB36, SB53, SB55, SB56, SB58, SB60, SB62, SB64, VL5060, VL530, VL540, VL600, VL6040, VM3080, VM340, VN2090, VN300

Controllare Rif. Prima.

Tutti i marchi appartengono ai rispettivi proprietari e il loro utilizzo è solo a scopo informativo.

WWW.EDUARDOREPUESTOSAGRICOLAS.COM

IVA non inclusa

Trasporto UE gratuito per ordini 500€

REF.555A

GUIDA pignone per DIRASPATORE NASTRO TRASPORTATORE. NUOVA VERSIONE (BIANCO)

Comp. 87610362, 84484443

9040L, 9040M, 9060L, 9060L GE, 9060L H, 9080L, 9080L GE, 9080L H, 9090L, 9090L GE, 9090L H, 9090X, 9090X H, 9090X H H, SB33, SB35, SB36, SB53, SB55, SB56, SB58, SB60, SB62, SB64, VL5060, VL5080, VL5090, VL530, VL540, VL550, VL570, VL600, VL6040, VL6050, VL6060, VL6070, VL6080, VL6090, VL610, VL620, VL630, VL640, VL660, VM3080, VM3080 AL, VM3090, VM340, VM370, VM4090, VM460, VN2080, VN2090, VN300, VX680, VX7090

REF.555C

GUIDA pignone per DIRASPATORE NASTRO TRASPORTATORE Cinghia della maglia BLU PIÙ VICINO

Comp. 51613526

7030L ,7030M ,8030L ,9050L H ,9090L H T4 ,9070L H ,9070L L ,9050L L ,9070M ,9080N HEAD ,9080N H ,9080N L ,9030L ,9090L H T5 ,9090L SH T4 ,9090L T3 ,9090L SH T5 ,7030M HEAD ,9050L SH ,9070L SH ,9070L L T5 ,9050L SH T5 ,9080N L T5 ,9070M T5 ,9030L T5 ,9070L H T5 ,9070L SH T5 ,9050L H T5 ,9050L L T5 ,8030L T5 ,9080N H T5

REF.580A

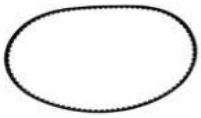

ESPOSITORE DIRASPATORE

Comp. 920019616

9030L, 9040L, 9040M, 9050L H, 9050L L, 9050L SH, 9060L, 9060L GE, 9060L H, 9060L SH, 9070L H, 9070L L, 9070L L T5, 9070L SH, 9070M, 9080L, 9080L GE, 9080L H, 9080L SH, 9080N H, 9080N L, 9090L, 9090L GE, 9090L H, 9090L H T4, 9090L H T5, 9090L SH, 9090L SH T4, 9090L SH T5, 9090L T3, 9090X, 9090X GE, 9090X H, 9090X H H, 9090X H T4, 9090X O, 9090X O GE, 9090X T3, 9090X T4, 9090X T5, SB33, SB35, SB36, SB53, SB55, SB56, SB58, SB60, SB62, SB64, SB65, VL600, VL6040, VL6050, VL6060, VL6070, VL6080, VL6090, VL610, VL620, VL630, VL640, VL660, VM4090, VM460, VX680, VX7090

REF.570B

ANTERIORE COLONNA CUSCINETTO n°11

Comp. 920092458

1214, 1620, 1620S, 2420, 2520, 2620, 2720, 7030M, 7030M H, 8030L, 9040L, 9040M, 9060L, 9060L GE, 9060L H, 9060L SH, 9080L, 9080L GE, 9080L H, 9080L SH, 9090L, 9090L GE, 9090L H, 9090L SH, 9090X, 9090X GE, 9090X H, 9090X H H, SB33, SB35, SB36, SB52, SB53, SB54, SB55, SB56, SB58, SB60, SB62, SB64, SB65, VL5060, VL5080, VL5090, VL530, VL540, VL550, VL570, VL600, VL6040, VL6050, VL6060, VL6070, VL6080, VL6090, VL610, VL620, VL630, VL640, VL660, VM3080, VM3080 AL, VM3090, VM340, VM370, VM4090, VM460, VN2090, VN300, VX680, VX7090

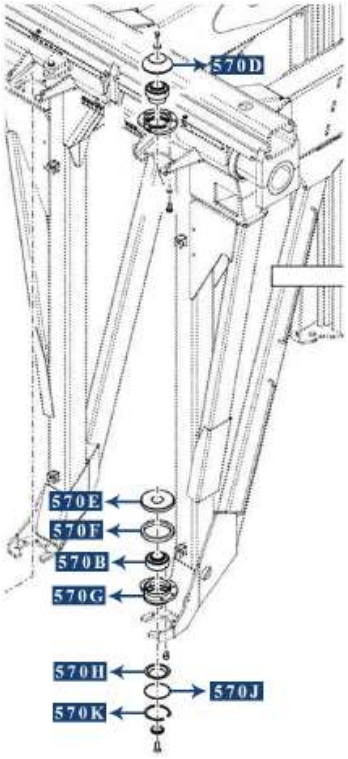

REF.570D*

PLUG RONDELLA n°6

Comp. 913355562

1214, 1620, 1620S, 2420, 2520, 2620, 2720, 9040L, 9040M, 9060L, 9060L GE, 9060L H, 9060L SH, 9080L, 9080L GE, 9080L H, 9080L SH, 9090L, 9090L GE, 9090L H, 9090L SH, 9090X, 9090X GE, 9090X H, 9090X H H, SB33, SB35, SB36, SB52, SB53, SB54, SB55, SB56, SB58, SB60, SB62, SB64, SB65, VL5060, VL5080, VL5090, VL530, VL540, VL550, VL570, VL600, VL6040, VL6050, VL6060, VL6070, VL6080, VL6090, VL610, VL620, VL630, VL640, VL660, VM3080, VM3080 AL, VM3090, VM340, VM370, VM4090, VM460, VN2090, VN300, VX680, VX7090

REF.570E*

ERMETICO RONDELLA n°13

Comp. 944007707

9040L, 9040M, 9060L, 9060L GE, 9060L H, 9060L SH, 9080L, 9080L GE, 9080L H, 9080L SH, 9090L, 9090L GE, 9090L H, 9090L SH, 9090X, 9090X GE, 9090X H, 9090X H H, SB33, SB35, SB36, SB52, SB53, SB54, SB55, SB56, SB58, SB60, SB62, SB64, SB65, VL5060, VL5080, VL5090, VL530, VL540, VL550, VL570, VL600, VL6040, VL6050, VL6060, VL6070, VL6080, VL6090, VL610, VL620, VL630, VL640, VL660, VM3080, VM3080 AL, VM3090, VM340, VM370, VM4090, VM460, VN2090, VN300, VX680, VX7090

REF.570F*

ROSETTA n°8

Comp. 920018497

7030M, 7030M H, 8030L, 9040L, 9040M, 9060L, 9060L GE, 9060L H, 9060L SH, 9080L, 9080L GE, 9080L H, 9080L SH, 9090L, 9090L GE, 9090L H, 9090L SH, 9090X, 9090X GE, 9090X H, 9090X H H, SB33, SB35, SB36, SB52, SB53, SB54, SB55, SB56, SB58, SB60, SB62, SB64, SB65, VL5060, VL5080, VL5090, VL530, VL540, VL550, VL570, VL600, VL6040, VL6050, VL6060, VL6070, VL6080, VL6090, VL610, VL620, VL630, VL640, VL660, VM3080, VM3080 AL, VM3090, VM340, VM370, VM4090, VM460, VN2090, VN300, VX680, VX7090

REF.570G*

CUSCINETTO SUPPORTO n°16

Comp. 944028987

7030M, 7030M H, 8030L, 9040L, 9040M, 9060L, 9060L GE, 9060L H, 9060L SH, 9080L, 9080L GE, 9080L H, 9080L SH, 9090L, 9090L GE, 9090L H, 9090L SH, 9090X, 9090X GE, 9090X H, 9090X H H, VL5060, VL5080, VL5090, VL530, VL540, VL550, VL570, VL600, VL6040, VL6050, VL6060, VL6070, VL6080, VL6090, VL610, VL620, VL630, VL640, VL660, VM3080, VM3080 AL, VM3090, VM340, VM370, VM4090, VM460, VN2090, VN300, VX680, VX7090

REF.570H*

PLUG RONDELLA n°14

Comp. 944007708

9040L, 9040M, 9060L, 9060L GE, 9060L H, 9060L SH, 9080L, 9080L GE, 9080L H, 9080L SH, 9090L, 9090L GE, 9090L H, 9090L SH, 9090X, 9090X GE, 9090X H, 9090X H H, SB33, SB35, SB36, SB52, SB53, SB54, SB55, SB56, SB58, SB60, SB62, SB64, SB65, VL5060, VL5080, VL5090, VL530, VL540, VL550, VL570, VL600, VL6040, VL6050, VL6060, VL6070, VL6080, VL6090, VL610, VL620, VL630, VL640, VL660, VM3080, VM3080 AL, VM3090, VM340, VM370, VM4090, VM460, VN2090, VN300, VX680, VX7090

REF.570J*

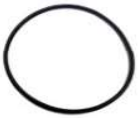

O-RING n°9

Comp. 920018498

7030M, 7030M H, 8030L, 9040L, 9040M, 9060L, 9060L GE, 9060L H, 9060L SH, 9080L, 9080L GE, 9080L H, 9080L SH, 9090L, 9090L GE, 9090L H, 9090L SH, 9090X, 9090X GE, 9090X H, 9090X H H, SB33, SB35, SB36, SB52, SB53, SB54, SB55, SB56, SB58, SB60, SB62, SB64, SB65, VL5060, VL5080, VL5090, VL530, VL540, VL550, VL570, VL600, VL6040, VL6050, VL6060, VL6070, VL6080, VL6090, VL610, VL620, VL630, VL640, VL660, VM3080, VM3080 AL, VM3090, VM340, VM370, VM4090, VM460, VN2090, VN300, VX680, VX7090

REF.570K*

Rondella di ritegno n°10

Comp. 920018499

7030M, 7030M H, 8030L, 9040L, 9040M, 9060L, 9060L GE, 9060L H, 9060L SH, 9080L, 9080L GE, 9080L H, 9080L SH, 9090L, 9090L GE, 9090L H, 9090L SH, 9090X, 9090X GE, 9090X H, 9090X H H, SB33, SB35, SB36, SB52, SB53, SB54, SB55, SB56, SB58, SB60, SB62, SB64, SB65, VL5060, VL5080, VL5090, VL530, VL540, VL550, VL570, VL600, VL6040, VL6050, VL6060, VL6070, VL6080, VL6090, VL610, VL620, VL630, VL640, VL660, VM3080, VM3080 AL, VM3090, VM340, VM370, VM4090, VM460, VN2090, VN300, VX680, VX7090

REF.570N

COLONNA CUSCINETTO Ø60x110x28 OSCILLANTE A 2 FILE SFERICHE

Comp. 47499485 (428162)

7030M, 7030M H, 8030L, 9040L, 9040M, 9060L, 9060L GE, 9060L H, 9060L SH, 9080L, 9080L GE, 9080L H, 9080L SH, 9090L, 9090L GE, 9090L H, 9090L SH, 9090X, 9090X GE, 9090X H, 9090X H H, SB33, SB35, SB36, SB52, SB53, SB54, SB55, SB56, SB58, SB60, SB62, SB64, SB65, VL5060, VL5080, VL5090, VL530, VL540, VL550, VL570, VL600, VL6040, VL6050, VL6060, VL6070, VL6080, VL6090, VL610, VL620, VL630, VL640, VL660, VM3080, VM3080 AL

REF.570P

COLONNA CUSCINETTO Ø40x80x23 OSCILLANTE A 2 FILE SFERICHE

Comp. 87516228

7030M, 7030M H, 8030L, 9040L, 9040M, 9060L, 9060L GE, 9060L H, 9060L SH, 9080L, 9080L GE, 9080L H, 9080L SH, 9090L, 9090L GE, 9090L H, 9090L SH, 9090X, 9090X GE, 9090X H, 9090X H H, SB33, SB35, SB36, SB52, SB53, SB54, SB55, SB56, SB58, SB60, SB62, SB64, SB65, VL5060, VL5080, VL5090, VL530, VL540, VL550, VL570, VL600, VL6040, VL6050, VL6060, VL6070, VL6080, VL6090, VL610, VL620, VL630, VL640, VL660, VM3080, VM3080 AL

REF.730A

Blu dipinto (0,4L SPRAY)

Comp. 9973524

7030L, 7030M, 8030L, 9040L, 9040M, 9050L H, 9050L L, 9050L SH, 9060L, 9060L GE, 9060L H, 9060L SH, 9070L H, 9070L L, 9070L SH, 9080L, 9080L GE, 9080L H, 9080L SH, 9080N H, 9080N L, 9090L, 9090L GE, 9090L H, 9090L H T4, 9090L SH, 9090L SH T4, 9090X, 9090X GE, 9090X GE T4, 9090X H, 9090X H T4, 9090X O, 9090X O GE, 9090X O GE T4, 9090X O T4, 9090X T4, VX7090

REF.730B

GRIGIO SCURO VERNICE (0,4L SPRAY)

Comp. 9973528

7030L, 7030M, 9050L SH, 9060L, 9060L GE, 9060L H, 9060L SH, 9070L H, 9070L L, 9070L SH, 9080L, 9080L GE, 9080L H, 9080L SH, 9080N H, 9080N L, 9090L, 9090L GE, 9090L H, 9090L H T4, 9090L SH, 9090L SH T4, 9090X, 9090X GE, 9090X GE T4, 9090X H, 9090X H T4, 9090X O, 9090X O GE, 9090X O GE T4, 9090X O T4, 9090X T4, VX7090

REF.731A

SILENT BLOCK 2 VITE

Comp. 920094153

1214, 1620, 1620S, 2414, 2420, 2514, 2520, 2614, 2620, 2714, 2720, 9090X O, 9090X O GE, 9090X O GE T3, 9090X O GE T4, 9090X O GE T5, 9090X O H T4, 9090X O T3, 9090X O T4, 9090X O T5, 9090X OP, 9090X OP GE, SB33, SB35, SB52, SB53, SB54, SB55, T140, T240, VL5060, VL5080, VL5090, VL530, VL540, VL550, VL570, VM3080, VM3080 AL, VM3090, VM340, VM370, VN2090, VN300, VX7090

REF.731B

SILENT BLOCK 1 VITE

Comp. 920018565

9040L, 9040M, 9050L H, 9050L L, 9060L, 9060L GE, 9060L H, 9060L SH, 9070L H, 9070L L, 9070L L T5, 9070M, 9070N H T5, 9070N L, 9070N L T5, 9070 , 9080L, 9080L GE, 9080L H, 9080L SH, 9080N H, 9080N L, 9090L, 9090L GE, 9090L H, 9090L H T4, 9090L H T5, 9090L SH, 9090L T3, 9090X, 9090X GE, 9090X H, 9090X H H, **9090X H T4, 9090X O, 9090X O GE, 9090X O GE T3, 9090X O GE T4, 9090X O GE T5, 9090X O H T4, 9090X** O T3, 9090X O T4, 9090X O T5, 9090X OP, 9090X OP GE, 9090X T3, 9090X T4, 9090X T5, SB36, SB56, SB58, SB60, SB62, SB64, SB65, VL5060, VL5080, VL5090, VL530, VL540, VL550, VL570, VL600, VL6040, VL6050, VL6060, VL6070, VL6080, VL6090, VL610, VL620, VL630, VL640, VL660, VM3080, VM3080 AL, VM3090, VM340, VM370, VM4090, VM460, VN2080, VN2090, VN260, VN300, VX680, VX7090

REF.744A

DEFLETTORE

Comp. 944033500

9090X, 9090X GE, 9090X GE T3, 9090X GE T4, 9090X GE T5, 9090X H, 9090X H H, 9090X H T4, 9090X O, 9090X O GE, 9090X O GE T3, 9090X O GE T4, 9090X O GE T5, 9090X O H T4, 9090X O T3, 9090X O T4, 9090X O T5, 9090X OP, 9090X OP GE, 9090X T3, 9090X T4, 9090X T5, SB65, VX680, VX7090

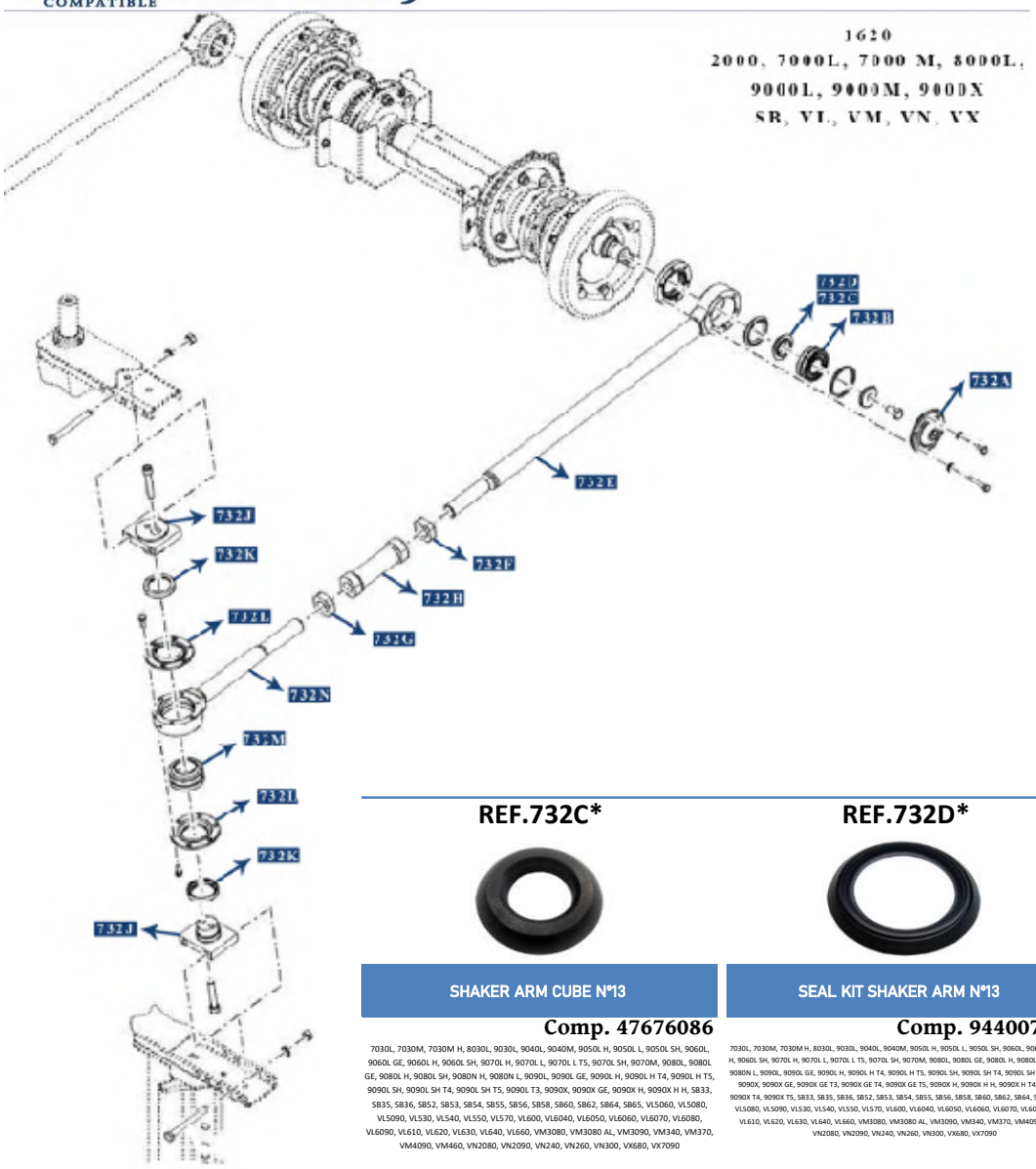

REF.732A*

FLANGIA PLUG N°20

Comp. 944000002

1620, 1620S, 2420, 2520, 2620, 2720, 7030L, 7030M, 7030M H, 8030L, 9030L, 9040L, 9040M, 9050L H, 9050L L, 9050L SH, 9060L, 9060L GE, 9060L H, 9060L SH, 9070L H, 9070L L, 9070L L T5, 9070L SH, 9070M, 9080L, 9080L GE, 9080L H, 9080L SH, 9090L, 9090L GE, 9090L H, 9090L H T4, 9090L H T5, 9090L SH, 9090L SH T4, 9090L SH T5, 9090L T3, 9090X, 9090X GE, 9090X GE T3, 9090X GE T4, 9090X GE T5, 9090X H, 9090X H H, 9090X H T4, 9090X T3, 9090X T4, 9090X T5, SB33, SB35, SB36, SB52, SB53, SB54, SB55, SB56, SB58, SB60, SB62, SB64, SB65, VL5060, VL5080, VL5090, VL530, VL540, VL550, VL570, VL600, VL6040, VL6050, VL6060, VL6070, VL6080, VL6090, VL610, VL620, VL630, VL640, VL660, VM3080, VM3080 AL, VM3090, VM340, VM370, VM4090, VM460, VN2090, VN240, VN260, VN300, VX680, VX7090

REF.732B

CUSCINETTO BRACCIO CUSCINETTO N°6

Comp. 26796210

1620, 1620S, 2420, 2520, 2620, 2720, 7030L, 7030M, 7030M H, 8030L, 9030L, 9040L, 9040M, 9050L H, 9050L L, 9050L SH, 9060L, 9060L GE, 9060L H, 9060L SH, 9070L H, 9070L L, 9070L L T5, 9070L SH, 9070M, 9080L, 9080L GE, 9080L H, 9080L SH, 9080N H, 9080N L, 9090L, 9090L GE, 9090L H, 9090L H T4, 9090L H T5, 9090L SH, 9090L SH T4, 9090L SH T5, 9090L T3, 9090X, 9090X GE, 9090X H, 9090X H H, SB33, SB35, SB36, SB52, SB53, SB54, SB55, SB56, SB58, SB60, SB62, SB64, SB65, VL5060, VL5080, VL5090, VL530, VL540, VL550, VL570, VL600, VL6040, VL6050, VL6060, VL6070, VL6080, VL6090, VL610, VL620, VL630, VL640, VL660, VM3080, VM3080 AL, VM3090, VM340, VM370, VM4090, VM460, VN2080, VN2090, VN240, VN260, VN300, VX680, VX7090

REF.732C*

SHAKER ARM CUBE N°13

Comp. 47676086

7030L, 7030M, 7030M H, 8030L, 9030L, 9040L, 9040M, 9050L H, 9050L L, 9050L SH, 9060L, 9060L GE, 9060L H, 9060L SH, 9070L H, 9070L L, 9070L L T5, 9070L SH, 9070M, 9080L, 9080L GE, 9080L H, 9080L SH, 9080N H, 9080N L, 9090L, 9090L GE, 9090L H, 9090L H T4, 9090L H T5, 9090L SH, 9090L SH T4, 9090L SH T5, 9090L T3, 9090X, 9090X GE, 9090X GE T3, 9090X GE T4, 9090X GE T5, 9090X H, 9090X H H, SB33, SB35, SB36, SB52, SB53, SB54, SB55, SB56, SB58, SB60, SB62, SB64, SB65, VL5060, VL5080, VL5090, VL530, VL540, VL550, VL570, VL600, VL6040, VL6050, VL6060, VL6070, VL6080, VL6090, VL610, VL620, VL630, VL640, VL660, VM3080, VM3080 AL, VM3090, VM340, VM370, VM4090, VM460, VN2080, VN2090, VN240, VN260, VN300, VX680, VX7090

REF.732D*

SEAL KIT SHAKER ARM N°13

Comp. 944007716

7030L, 7030M, 7030M H, 8030L, 9030L, 9040L, 9040M, 9050L H, 9050L L, 9050L SH, 9060L, 9060L GE, 9060L H, 9060L SH, 9070L H, 9070L L, 9070L L T5, 9070L SH, 9070M, 9080L, 9080L GE, 9080L H, 9080L SH, 9080N H, 9080N L, 9090L, 9090L GE, 9090L H, 9090L H T4, 9090L H T5, 9090L SH, 9090L SH T4, 9090L SH T5, 9090L T3, 9090X, 9090X GE, 9090X GE T3, 9090X GE T4, 9090X GE T5, 9090X H, 9090X H H, 9090X H T4, 9090X T3, 9090X T4, 9090X T5, SB33, SB35, SB36, SB52, SB53, SB54, SB55, SB56, SB58, SB60, SB62, SB64, SB65, VL5060, VL5080, VL5090, VL530, VL540, VL550, VL570, VL600, VL6040, VL6050, VL6060, VL6070, VL6080, VL6090, VL610, VL620, VL630, VL640, VL660, VM3080, VM3080 AL, VM3090, VM340, VM370, VM4090, VM460, VN2080, VN2090, VN240, VN260, VN300, VX680, VX7090

REF.732E*

LINK ROD N°12

Comp. 944000056

1620, 1620S, 2420, 2520, 2620, 2720, 7030L, 7030M, 7030M H, 8030L, 9030L, 9040L, 9040M, 9050L L, 9050L SH, 9060L, 9060L GE, 9060L H, 9060L SH, 9070L L, 9070L L T5, 9070L SH, 9070M, 9080L, 9080L GE, 9080L H, 9080L SH, 9090L, 9090L GE, 9090L H, 9090L SH, 9090L SH T4, 9090L SH T5, 9090L T3, SB33, SB35, SB36, SB52, SB53, SB54, SB55, SB56, SB58, SB60, SB62, SB64, VL5060, VL5080, VL5090, VL530, VL540, VL550, VL570, VL600, VL6040, VL6050, VL6060, VL6070, VL6080, VL6090, VL610, VL620, VL630, VL640, VL660, VM3080, VM3080 AL, VM3090, VM340, VM370, VM4090, VM460, VN2090, VN300

REF.732F*

SOTTILE DADO N°19

Comp. 920008858

1214, 1620, 1620S, 2420, 2520, 2620, 2720, 7030L, 7030M, 7030M H, 8030L, 9030L, 9040L, 9040M, 9050L H, 9050L L, 9050L SH, 9060L, 9060L GE, 9060L H, 9060L SH, 9070L H, 9070L L, 9070L L T5, 9070L SH, 9070M, 9070N L, 9080L, 9080L GE, 9080L H, 9080L SH, 9080N H, 9080N L, 9090L, 9090L GE, 9090L H, 9090L H T4, 9090L H T5, 9090L SH, 9090L SH T4, 9090L SH T5, 9090L T3, SB33, SB35, SB36, SB52, SB53, SB54, SB55, SB56, SB58, SB60, SB62, SB64, VL5060, VL5080, VL5090, VL530, VL540, VL550, VL570, VL600, VL6040, VL6050, VL6060, VL6070, VL6080, VL6090, VL610, VL620, VL630, VL640, VL660, VM3080, VM3080 AL, VM3090, VM340, VM370, VM4090, VM460, VN2080, VN2090, VN240, VN260, VN300

REF.732G*

SOTTILE DADO n°18

Comp. 707704968

1620, 1620S, 2420, 2520, 2620, 2720, 7030L, 7030M, 7030M H, 8030L, 9030L, 9040L, 9040M, 9050L H, 9050L L, 9050L SH, 9060L, 9060L GE, 9060L H, 9060L SH, 9070L H, 9070L L, 9070L L T5, 9070L SH, 9070M, 9070N L, 9080L, 9080L GE, 9080L H, 9080L SH, 9080N H, 9080N L, 9090L, 9090L GE, 9090L H, 9090L H T4, 9090L H T5, 9090L SH, 9090L SH T4, 9090L SH T5, 9090L T3, SB33, SB35, SB36, SB52, SB53, SB54, SB55, SB56, SB58, SB60, SB62, SB64, VL5060, VL5080, VL5090, VL530, VL540, VL550, VL570, VL600, VL6040, VL6050, VL6060, VL6070, VL6080, VL6090, VL610, VL620, VL630, VL640, VL660, VM3080, VM3080 AL, VM3090, VM340, VM370, VM4090, VM460, VN2080, VN2090, VN240, VN260, VN300

REF.732H*

REGOLAZIONE TUBO N°23

Comp. 944002335

1214, 1620, 1620S, 2420, 2520, 2620, 2720, 7030L, 7030M, 7030M H, 8030L, 9030L, 9040L, 9040M, 9050L H, 9050L L, 9050L SH, 9060L, 9060L GE, 9060L H, 9060L SH, 9070L H, 9070L L, 9070L L T5, 9070L SH, 9070M, 9070N L, 9080L, 9080L GE, 9080L H, 9080L SH, 9090L, 9090L GE, 9090L H, 9090L H T4, 9090L H T5, 9090L SH, 9090L SH T4, 9090L SH T5, 9090L T3, SB33, SB35, SB36, SB52, SB53, SB54, SB55, SB56, SB58, SB60, SB62, SB64, VL5060, VL5080, VL5090, VL530, VL540, VL550, VL570, VL600, VL6040, VL6050, VL6060, VL6070, VL6080, VL6090, VL610, VL620, VL630, VL640, VL660, VM3080, VM3080 AL, VM3090, VM340, VM370, VM4090, VM460, VN2080, VN2090, VN240, VN260, VN300

REF.732J*

Staffa del braccio SUPPORTO N°24

Comp. 944007020

7030L, 7030M, 7030M H, 8030L, 9030L, 9040L, 9040M, 9060L, 9060L GE, 9060L H, 9060L SH, 9080L, 9080L GE, 9080L H, 9080L SH, 9090L, 9090L GE, 9090L H, 9090L SH, SB33, SB35, SB36, SB52, SB53, SB54, SB55, SB56, SB58, SB60, SB62, SB64, SB65, VL5060, VL5080, VL5090, VL530, VL540, VL550, VL570, VL600, VL6040, VL6050, VL6060, VL6070, VL6080, VL6090, VL610, VL620, VL630, VL640, VL660, VM3080, VM3080 AL, VM3090, VM340, VM370, VM4090, VM460

REF.732K*

SHUTTER ARM KIT GUARNIZIONE N°10

Comp. 944007018

7030L, 7030M, 7030M H, 8030L, 9030L, 9040L, 9040M, 9050L H, 9050L L, 9050L SH, 9060L, 9060L GE, 9060L H, 9060L SH, 9070L H, 9070L L, 9070L L T5, 9070L SH, 9070M, 9080L, 9080L GE, 9080L H, 9080L SH, 9090L, 9090L GE, 9090L H, 9090L H T4, 9090L H T5, 9090L SH, 9090L SH T4, 9090L SH T5, 9090L T3, 9090X, 9090X GE, 9090X GE T3, 9090X GE T4, 9090X GE T5, 9090X H, 9090X H H, 9090X H T4, 9090X T3, 9090X T4, 9090X T5, SB33, SB35, SB36, SB52, SB53, SB54, SB55, SB56, SB58, SB60, SB62, SB64, SB65, VL5060, VL5080, VL5090, VL530, VL540, VL550, VL570, VL600, VL6040, VL6050, VL6060, VL6070, VL6080, VL6090, VL610, VL620, VL630, VL640, VL660, VM3080, VM3080 AL, VM3090, VM340, VM370, VM4090, VM460, VN2090, VN300, VX680, VX7090

REF.732L*

FERMO ARM SHAKER N°11

Comp. 944007019

7030L, 7030M, 7030M H, 8030L, 9030L, 9040L, 9040M, 9050L H, 9050L L, 9050L SH, 9060L, 9060L GE, 9060L H, 9060L SH, 9070L H, 9070L L, 9070L L T5, 9070L SH, 9070M, 9080L, 9080L GE, 9080L H, 9080L SH, 9090L, 9090L GE, 9090L H, 9090L H T4, 9090L H T5, 9090L SH, 9090L SH T4, 9090L SH T5, 9090L T3, 9090X, 9090X GE, 9090X GE T3, 9090X GE T4, 9090X GE T5, 9090X H, 9090X H H, 9090X H T4, 9090X T3, 9090X T4, 9090X T5, SB33, SB35, SB36, SB52, SB53, SB54, SB55, SB56, SB58, SB60, SB62, SB64, SB65, VL5060, VL5080, VL5090, VL530, VL540, VL550, VL570, VL600, VL6040, VL6050, VL6060, VL6070, VL6080, VL6090, VL610, VL620, VL630, VL640, VL660, VM3080, VM3080 AL, VM3090, VM340, VM370, VM4090, VM460, VN2090, VN300, VX680, VX7090

REF.732M

SHARP ARM ARTICOLAZIONE N°8

Comp. 920002308

1620, 1620S, 2420, 2514, 2520, 2620, 2714, 2720, 7030L, 7030M, 7030M H, 8030L, 9030L, 9040L, 9040M, 9050L H, 9050L L, 9050L SH, 9060L, 9060L GE, 9060L H, 9060L SH, 9070L H, 9070L L, 9070L L T5, 9070L SH, 9070M, 9080L, 9080L GE, 9080L H, 9080L SH, 9080N H, 9080N L, 9090L, 9090L GE, 9090L H, 9090L H T4, 9090L H T5, 9090L SH, 9090L SH T4, 9090L SH T5, 9090L T3, 9090X, 9090X GE, 9090X GE T3, 9090X GE T4, 9090X GE T5, 9090X H, 9090X H H, 9090X H T4, 9090X T3, 9090X T4, 9090X T5, SB33, SB35, SB36, SB52, SB53, SB54, SB55, SB56, SB58, SB60, SB62, SB64, SB65, VL5060, VL5080, VL5090, VL530, VL540, VL550, VL570, VL600, VL6040, VL6050, VL6060, VL6070, VL6080, VL6090, VL610, VL620, VL630, VL640, VL660, VM3080, VM3080 AL, VM3090, VM340, VM370, VM4090, VM460, VN2080, VN2090, VN240, VN260, VN300, VX680, VX7090

REF.732N*

LINK ROD N°21

Comp. 944000053

1620, 1620S, 2420, 2520, 2620, 2720, 7030L, 7030M, 7030M H, 8030L, 9030L, 9040L, 9040M, 9050L L, 9050L SH, 9060L, 9060L GE, 9060L H, 9060L SH, 9070L L, 9070L L T5, 9070L SH, 9070M, 9080L, 9080L GE, 9080L H, 9080L SH, 9090L, 9090L GE, 9090L H, 9090L SH, 9090L SH T4, 9090L SH T5, 9090L T3, SB33, SB35, SB36, SB52, SB53, SB54, SB55, SB56, SB58, SB60, SB62, SB64, VL5060, VL5080, VL5090, VL530, VL540, VL550, VL570, VL600, VL6040, VL6050, VL6060, VL6070, VL6080, VL6090, VL610, VL620, VL630, VL640, VL660, VM3080, VM3080 AL, VM3090, VM340, VM370, VM4090, VM460, VN2090, VN300

Tutti i marchi appartengono ai rispettivi proprietari e il loro utilizzo è solo a scopo informativo.

Controllare Rif. Prima.

WWW.EDUARDOREPUESTOSAGRICOLAS.COM

IVA non inclusa

Trasporto UE gratuito per ordini 500€

NEW HOLLAND-BRAUD COMPATIBLE

EDUARDO

REF.501A

RIVETTI cestelli 250 UDS

Comp. 920018082

1214, 1620, 1620S, 2720, 7030L, 7030M, 7030M H, 8030L, 9030L, 9040L, 9040M, 9050L H, 9050L L, 9050L SH, 9060L, 9060L GE, 9060L H, 9060L SH, 9070L H, 9070L L, 9070L L TS, 9070L SH, 9070M, 9080L, 9080L GE, 9080L H, 9080L SH, 9080N H, 9080N L, 9090L, 9090L GE, 9090L H, 9090L H T4, 9090L H TS, 9090L SH, 9090L SH T4, 9090L SH TS, 9090L T3, 9090X, 9090X GE, 9090X GE T3, 9090X GE T4, 9090X GE TS, 9090X H, 9090X H H, 9090X H T4, 9090X O, 9090X O GE, 9090X O GE T3, 9090X O GE T4, 9090X O GE TS, 9090X O H T4, 9090X O T3, 9090X O T4, 9090X O TS, 9090X OP, 9090X OP GE, 9090X T3, 9090X T4, 9090X TS, LM625, SB33, SB35, SB36, SB52, SB53, SB54, SB55, SB56, SB58, SB60, SB62, SB64, SB65, VL5060, VL5080, VL5090, VL530, VL540, VL550, VL570, VL600, VL6040, VL6050, VL6060, VL6070, VL6080, VL6090, VL610, VL620, VL630, VL640, VL660, VM3080, VM3080 AL, VM3090, VM340, VM370, VM4090, VM460, VN2080, VN2090, VN240, VN260, VN300, VX680, VX7090

REF.502A

VITE-dado autobloccante BASKETS UNION M4-15MM

Comp. -

1214, 1620, 1620S, 2414, 2420, 2514, 2520, 2614, 2620, 2714, 2720, 7030L, 7030M, 7030M H, 8030L, 9030L, 9040L, 9040M, 9050L H, 9050L L, 9050L SH, 9060L, 9060L GE, 9060L H, 9060L SH, 9070L H, 9070L L, 9070L L TS, 9070L SH, 9070M, 9080L, 9080L GE, 9080L H, 9080L SH, 9080N H, 9080N L, 9090L, 9090L GE, 9090L H, 9090L H T4, 9090L H TS, 9090L SH, 9090L SH T4, 9090L SH TS, 9090L T3, 9090X, 9090X GE, 9090X GE T3, 9090X GE T4, 9090X GE TS, 9090X H, 9090X H H, 9090X H T4, 9090X O, 9090X O GE, 9090X O GE T3, 9090X O GE T4, 9090X O GE TS, 9090X O H T4, 9090X O T3, 9090X O T4, 9090X O TS, 9090X OP, 9090X OP GE, 9090X T3, 9090X T4, 9090X TS, SB33, SB35, SB36, SB52, SB53, SB54, SB55, SB56, SB58, SB60, SB62, SB64, SB65, VL5060, VL5080, VL5090, VL530, VL540, VL550, VL570, VL600, VL6040, VL6050, VL6060, VL6070, VL6080, VL6090, VL610, VL620, VL630, VL640, VL660, VM3080, VM3080 AL, VM3090, VM340, VM370, VM4090, VM460, VN2080, VN2090, VN240, VN260, VN300, VX680, VX7090

REF.503A

VITE M8x50- SPLIT DADO -Lavatrice

Comp. 70005133,,920019493,,11194079

1214, 1620, 1620S, 2414, 2420, 2514, 2520, 2614, 2620, 2714, 2720, 7030L, 7030M, 7030M H, 8030L, 9030L, 9040L, 9040M, 9050L H, 9050L L, 9050L SH, 9060L, 9060L GE, 9060L H, 9060L SH, 9070L H, 9070L L, 9070L L TS, 9070L SH, 9070M, 9080L, 9080L GE, 9080L H, 9080L SH, 9080N H, 9080N L, 9090L, 9090L GE, 9090L H, 9090L H T4, 9090L H TS, 9090L SH, 9090L SH T4, 9090L SH TS, 9090L T3, 9090X, 9090X GE, 9090X GE T3, 9090X GE T4, 9090X GE TS, 9090X H, 9090X H H, 9090X H T4, 9090X O, 9090X O GE, 9090X O GE T3, 9090X O GE T4, 9090X O GE TS, 9090X O H T4, 9090X O T3, 9090X O T4, 9090X O TS, 9090X OP, 9090X OP GE, 9090X T3, 9090X T4, 9090X TS, SB33, SB35, SB36, SB52, SB53, SB54, SB55, SB56, SB58, SB60, SB62, SB64, SB65, VL5060, VL5080, VL5090, VL530, VL540, VL550, VL570, VL600, VL6040, VL6050, VL6060, VL6070, VL6080, VL6090, VL610, VL620, VL630, VL640, VL660, VM3080, VM3080 AL, VM3090, VM340, VM370, VM4090, VM460, VN2080, VN2090, VN240, VN260, VN300, VX680, VX7090,0,2,1,75

REF.503B

VITE M8x50

Comp. 70005133

1620, 1620S, 2720, 4880, 7030L, 7030M, 7030M H, 8030L, 9030L, 9040L, 9040M, 9050L H, 9050L L, 9050L SH, 9060L, 9060L GE, 9060L H, 9060L SH, 9070L H, 9070L L, 9070L L TS, 9070L SH, 9070M, 9080L, 9080L GE, 9080L H, 9080L SH, 9090L, 9090L GE, 9090L H, 9090L H T4, 9090L H TS, 9090L SH, 9090L SH T4, 9090L SH TS, 9090L T3, 9090X, 9090X GE, 9090X GE T3, 9090X GE T4, 9090X GE TS, 9090X H, 9090X H H, 9090X H T4, 9090X O, 9090X O GE, 9090X O GE T3, 9090X O GE T4, 9090X O GE TS, 9090X O H T4, 9090X O T3, 9090X O T4, 9090X O TS, 9090X OP, 9090X OP GE, 9090X T3, 9090X T4, 9090X TS, SB33, SB35, SB36, SB52, SB53, SB54, SB55, SB56, SB58, SB60, SB62, SB64, SB65, VL5060, VL5080, VL5090, VL530, VL540, VL550, VL570, VL600, VL6040, VL6050, VL6060, VL6070, VL6080, VL6090, VL610, VL620, VL630, VL640, VL660, VM3080, VM3080 AL, VM3090, VM340, VM370, VM4090, VM460, VN2080, VN2090, VN240, VN260, VN300, VX680, VX7090

REF.504B

VITE -M10X70 + SPLIT DADO (12.9 zincato)

Comp. 1107674, 92001949

1620, 1620S, 2720, 4880, 7030L, 7030M, 7030M H, 8030L, 9030L, 9040L, 9040M, 9050L H, 9050L L, 9050L SH, 9060L, 9060L GE, 9060L H, 9060L SH, 9070L H, 9070L L, 9070L L TS, 9070L SH, 9070M, 9080L, 9080L GE, 9080L H, 9080L SH, 9090L, 9090L GE, 9090L H, 9090L H T4, 9090L H TS, 9090L SH, 9090L SH T4, 9090L SH TS, 9090L T3, 9090X, 9090X GE, 9090X GE T3, 9090X GE T4, 9090X GE TS, 9090X H, 9090X H H, 9090X H T4, 9090X O, 9090X O GE, 9090X O GE T3, 9090X O GE T4, 9090X O GE TS, 9090X O H T4, 9090X O T3, 9090X O T4, 9090X O TS, 9090X OP, 9090X OP GE, 9090X T3, 9090X T4, 9090X TS, SB33, SB35, SB36, SB52, SB53, SB54, SB55, SB56, SB58, SB60, SB62, SB64, SB65, VL5060, VL5080, VL5090, VL530, VL540, VL550, VL570, VL600, VL6040, VL6050, VL6060, VL6070, VL6080, VL6090, VL610, VL620, VL630, VL640, VL660, VM3080, VM3080 AL, VM3090, VM340, VM370, VM4090, VM460, VN2080, VN2090, VN240, VN260, VN300, VX680, VX7090 - VENDIMIADORA (01/07 - 12/12)

REF.504C

VITE -M10X70 (imbracature anteriori, shaker) (12,9 zincato)

Comp. 1107674

1620, 1620S, 4600, 7030L, 7030M, 7030M H, 8030L, 9030L, 9040L, 9040M, 9050L H, 9050L L, 9050L SH, 9060L, 9060L GE, 9060L H, 9060L SH, 9070L H, 9070L L, 9070L L TS, 9070L SH, 9070M, 9080L, 9080L GE, 9080L H, 9080L SH, 9090L, 9090L GE, 9090L H, 9090L H T4, 9090L H TS, 9090L SH, 9090L SH T4, 9090L SH TS, 9090L T3, 9090X, 9090X GE, 9090X GE T3, 9090X GE T4, 9090X GE TS, 9090X H, 9090X H H, 9090X H T4, 9090X O, 9090X O GE, 9090X O GE T3, 9090X O GE T4, 9090X O GE TS, 9090X O H T4, 9090X O T3, 9090X O T4, 9090X O TS, 9090X OP, 9090X OP GE, 9090X T3, 9090X T4, 9090X TS, SB33, SB35, SB36, SB52, SB53, SB54, SB55, SB56, SB58, SB60, SB62, SB64, SB65, VL5060, VL5080, VL5090, VL530, VL540, VL550, VL570, VL600, VL6040, VL6050, VL6060, VL6070, VL6080, VL6090, VL610, VL620, VL630, VL640, VL660, VM3080, VM3080 AL, VM3090, VM340, VM370, VM4090, VM460, VN2080, VN2090, VN240, VN260, VN300, VX680, VX7090

REF.504D

VITE -M10X80 BARRA ORMEGGIO POSTERIORE 12.9 Zn

Comp. 11107774

7030L, 7030M, 7030M H, 8030L, 9030L, 9040L, 9040M, 9050L H, 9050L L, 9050L SH, 9060L, 9060L GE, 9060L H, 9060L SH, 9070L H, 9070L L, 9070L L TS, 9070L SH, 9070M, 9080L, 9080L GE, 9080L H, 9080L SH, 9090L, 9090L GE, 9090L H, 9090L H T4, 9090L H TS, 9090L SH, 9090L SH T4, 9090L SH TS, 9090L T3, 9090X, 9090X GE, 9090X GE T3, 9090X GE T4, 9090X GE TS, 9090X H, 9090X H H, 9090X H T4, 9090X O, 9090X O GE, 9090X O GE T3, 9090X O GE T4, 9090X O GE TS, 9090X O H T4, 9090X O T3, 9090X O T4, 9090X O TS, 9090X OP, 9090X OP GE, 9090X T3, 9090X T4, 9090X TS, SB33, SB35, SB36, SB53, SB55, SB56, SB58, SB60, SB62, SB64, SB65, VL5060, VL5080, VL5090, VL530, VL540, VL550, VL570, VL600, VL6040, VL6050, VL6060, VL6070, VL6080, VL6090, VL610, VL620, VL630, VL640, VL660, VM3080, VM3080 AL, VM3090, VM340, VM370, VM4090, VM460, VN2090, VN300, VX680, VX7090

REF.504F

VITE -M10X80 AMMORTIZZATORI ANTERIORI DA ORMEGGIO 12,9 Zn

Comp. 11107874

7030L, 7030M, 7030M H, 8030L, 9030L, 9040L, 9040M, 9050L H, 9050L L, 9050L SH, 9060L, 9060L GE, 9060L H, 9060L SH, 9070L H, 9070L L, 9070L L TS, 9070L SH, 9070M, 9080L, 9080L GE, 9080L H, 9080L SH, 9090L, 9090L GE, 9090L H, 9090L H T4, 9090L H TS, 9090L SH, 9090L SH T4, 9090L SH TS, 9090L T3, 9090X, 9090X GE, 9090X GE T3, 9090X GE T4, 9090X GE TS, 9090X H, 9090X H H, 9090X H T4, 9090X O, 9090X O GE, 9090X O GE T3, 9090X O GE T4, 9090X O GE TS, 9090X O H T4, 9090X O T3, 9090X O T4, 9090X O TS, 9090X OP, 9090X OP GE, 9090X T3, 9090X T4, 9090X TS, SB33, SB35, SB36, SB53, SB55, SB56, SB58, SB60, SB62, SB64, SB65, VL5060, VL5080, VL5090, VL530, VL540, VL550, VL570, VL600, VL6040, VL6050, VL6060, VL6070, VL6080, VL6090, VL610, VL620, VL630, VL640, VL660, VM3080, VM3080 AL, VM3090, VM340, VM370, VM4090, VM460, VN2090, VN300, VX680, VX7090,2,35,1,32

REF.504G

VITE -M10X80 + SPLIT DADO (12.9 zincato)

Comp. 11107874, 92001949

7030L, 7030M, 7030M H, 8030L, 9030L, 9040L, 9040M, 9050L H, 9050L L, 9050L SH, 9060L, 9060L GE, 9060L H, 9060L SH, 9070L H, 9070L L, 9070L L TS, 9070L SH, 9070M, 9080L, 9080L GE, 9080L H, 9080L SH, 9090L, 9090L GE, 9090L H, 9090L H T4, 9090L H TS, 9090L SH, 9090L SH T4, 9090L SH TS, 9090L T3, 9090X, 9090X GE, 9090X GE T3, 9090X GE T4, 9090X GE TS, 9090X H, 9090X H H, 9090X H T4, 9090X O, 9090X O GE, 9090X O GE T3, 9090X O GE T4, 9090X O GE TS, 9090X O H T4, 9090X O T3, 9090X O T4, 9090X O TS, 9090X OP, 9090X OP GE, 9090X T3, 9090X T4, 9090X TS, SB33, SB35, SB36, SB53, SB55, SB56, SB58, SB60, SB62, SB64, SB65, VL5060, VL5080, VL5090, VL530, VL540, VL550, VL570, VL600, VL6040, VL6050, VL6060, VL6070, VL6080, VL6090, VL610, VL620, VL630, VL640, VL660, VM3080, VM3080 AL, VM3090, VM340, VM370, VM4090, VM460, VN2090, VN300, VX680, VX7090,2,35,1,32,2,37

REF.504E

VITE -M10X75 + SPLIT DADO (12.9 zincato)

Comp. 11107774, 92001949

7030L, 7030M, 7030M H, 8030L, 9030L, 9040L, 9040M, 9050L H, 9050L L, 9050L SH, 9060L, 9060L GE, 9060L H, 9060L SH, 9070L H, 9070L L, 9070L L TS, 9070L SH, 9070M, 9080L, 9080L GE, 9080L H, 9080L SH, 9090L, 9090L GE, 9090L H, 9090L H T4, 9090L H TS, 9090L SH, 9090L SH T4, 9090L SH TS, 9090L T3, 9090X, 9090X GE, 9090X GE T3, 9090X GE T4, 9090X GE TS, 9090X H, 9090X H H, 9090X H T4, 9090X O, 9090X O GE, 9090X O GE T3, 9090X O GE T4, 9090X O GE TS, 9090X O H T4, 9090X O T3, 9090X O T4, 9090X O TS, 9090X OP, 9090X OP GE, 9090X T3, 9090X T4, 9090X TS, SB33, SB35, SB36, SB52, SB53, SB54, SB55, SB56, SB58, SB60, SB62, SB64, SB65, VL5060, VL5080, VL5090, VL530, VL540, VL550, VL570, VL600, VL6040, VL6050, VL6060, VL6070, VL6080, VL6090, VL610, VL620, VL630, VL640, VL660, VM3080, VM3080 AL, VM3090, VM340, VM370, VM4090, VM460, VN2090, VN300, VX680, VX7090,2,35

REF.505B

VITE M10x70-SPLIT DADO lavatore piatto

Comp. 11107674,944008815,11198479,920019491

1620, 1620S, 4600, 7030L, 7030M, 7030M H, 8030L, 9030L, 9040L, 9040M, 9050L H, 9050L L, 9050L SH, 9060L, 9060L GE, 9060L H, 9060L SH, 9070L H, 9070L L, 9070L L TS, 9070L SH, 9070M, 9080L, 9080L GE, 9080L H, 9080L SH, 9090L, 9090L GE, 9090L H, 9090L H T4, 9090L H TS, 9090L SH, 9090L SH T4, 9090L SH TS, 9090L T3, 9090X, 9090X GE, 9090X GE T3, 9090X GE T4, 9090X GE TS, 9090X H, 9090X H H, 9090X H T4, 9090X O, 9090X O GE, 9090X O GE T3, 9090X O GE T4, 9090X O GE TS, 9090X O H T4, 9090X O T3, 9090X O T4, 9090X O TS, 9090X OP, 9090X OP GE, 9090X T3, 9090X T4, 9090X TS, SB33, SB35, SB36, SB53, SB55, SB56, SB58, SB60, SB62, SB64, SB65, VL5060, VL5080, VL5090, VL530, VL540, VL550, VL570, VL600, VL6040, VL6050, VL6060, VL6070, VL6080, VL6090, VL610, VL620, VL630, VL640, VL660, VM3080, VM3080 AL, VM3090, VM340, VM370, VM4090, VM460, VN2090, VN240, VN260, VN300, VX680, VX7090 - VENDIMIADORA (01/07 - 12/12)

REF.506A

CHIUSURA RONDELLA

Comp. 944008815

1620, 1620S, 7030L, 7030M, 7030M H, 8030L, 9030L, 9040L, 9040M, 9050L H, 9050L L, 9050L SH, 9060L, 9060L GE, 9060L H, 9060L SH, 9070L H, 9070L L, 9070L L TS, 9070L SH, 9070M, 9080L, 9080L GE, 9080L H, 9080L SH, 9090L, 9090L GE, 9090L H, 9090L H T4, 9090L H TS, 9090L SH, 9090L SH T4, 9090L SH TS, 9090L T3, 9090X, 9090X GE, 9090X GE T3, 9090X GE T4, 9090X GE TS, 9090X H, 9090X H H, 9090X H T4, 9090X O, 9090X O GE, 9090X O GE T3, 9090X O GE T4, 9090X O GE TS, 9090X O H T4, 9090X O T3, 9090X O T4, 9090X O TS, 9090X OP, 9090X OP GE, 9090X T3, 9090X T4, 9090X TS, SB33, SB35, SB36, SB52, SB53, SB54, SB55, SB56, SB58, SB60, SB62, SB64, SB65, VL5060, VL5080, VL5090, VL530, VL540, VL550, VL570, VL600, VL6040, VL6050, VL6060, VL6070, VL6080, VL6090, VL610, VL620, VL630, VL640, VL660, VM3080, VM3080 AL, VM3090, VM340, VM370, VM4090, VM460, VN2080, VN2090, VN240, VN260, VN300, VX680, VX7090

REF.507A

VITE - Kit piastra M10-40mm

Comp. 70770628,920009501

REF.507B

VITE - DADO - RONDELLA M8-25mm

Comp. -

REF.509A

TRASMISSIONE SENSORE diametro 12 NPN. (SB)

Comp. 920019073

SB36, SB56, SB58, SB60, SB62, SB64, SB65

REF.509B

TRASMISSIONE SENSORE diameter12 PNP. (SB, VL, VX)

Comp. 920018843

SB33, SB35, SB36, SB53, SB55, SB56, SB58, SB60, SB62, SB64, SB65, TB10, TB15, VL5060, VL5080, VL5090, VL600, VL6040, VL6050, VL6060, VL6070, VL6080, VL6090, VL610, VL620, VL630, VL640, VL660, VM3080, VM3080 AL, VM3090, VM4090, VM460, VN2080, VN2090, VN240, VN260, VX680, VX7090

REF.509C

COMMUTAZIONE diametro CAP SWITCH 18 (9000L, VL, VX)

Comp. 920019770

9060L GE, 9080L GE, 9090L GE, SB33, SB35, SB53, SB55, VL5060, VL5080, VL5090, VL530, VL540, VL550, VL570, VL600, VL6040, VL6050, VL6060, VL6070, VL6080, VL6090, VL610, VL620, VL630, VL640, VL660, VM3080, VM3080 AL, VM3090, VM340, VM370, VM4090, VM460, VN2080, VN2090, VN300, VX680, VX7090

REF.509D

ESTRATTORE SENSORE (VL, VX)

Comp. 87644844

9080N H, 9080N L, SB33, SB35, SB36, SB53, SB55, SB56, SB58, SB60, SB62, SB64, VL5060, VL5080, VL5090, VL530, VL540, VL550, VL570, VL600, VL6040, VL6050, VL6060, VL6070, VL6080, VL6090, VL610, VL620, VL630, VL640, VL660, VM3080, VM3080 AL, VM3090, VM340, VM370, VM4090, VM460, VN2080, VN2090, VN300, VX680, VX7090

REF.509F

SENSORE diameter18 PNP. (SB, VL, VM, VN, VX, 9000)

Comp. 920018842

1620S, 2420, 2520, 2620, 2720, 9040L, 9040M, 9060L, 9060L GE, 9060L H, 9060L SH, 9080L, 9080L GE, 9080L H, 9080L SH, 9090L, 9090L GE, 9090L H, 9090L SH, 9090X, 9090X GE, 9090X H, 9090X OP, 9090X OP GE, SB33, SB35, SB36, SB52, SB53, SB54, SB55, SB56, SB58, SB60, SB62, SB64, SB65, TB10, TB15, VL5060, VL5080, VL5090, VL600, VL6040, VL6050, VL6060, VL6070, VL6080, VL6090, VL610, VL620, VL630, VL640, VL660, VM3080, VM3080 AL, VM3090, VM4090, VM460, VN2080, VN2090, VN240, VN260, VX680, VX7090

REF.509G

SENSORE (codice originale 87.342.073) (9090)

Comp. 87342073

8030L, 9030L, 9040L, 9040M, 9050L H, 9050L L, 9050L SH, 9060L, 9060L GE, 9060L H, 9060L SH, 9070L H, 9070L L, 9070L L TS, 9070L SH, 9070M, 9070N H TS, 9070N L, 9070N L TS, 9070 , 9080L, 9080L GE, 9080L H, 9080L SH, 9080N H, 9080N L, 9090L, 9090L GE, 9090L H, 9090L H T4, 9090L H TS, 9090L SH, 9090L SH T4, **9090L SH TS, 9090L T3, 9090X, 9090X GE, 9090X GE T3, 9090X GE T4, 9090X GE TS, 9090X H H,** 9090X H T4, 9090X O, 9090X O GE, 9090X O GE T3, 9090X O GE T4, 9090X O GE TS, 9090X O H T4, 9090X O T3, 9090X O T4, 9090X O TS, 9090X OP, 9090X OP GE, 9090X T3, 9090X T4, 9090X TS, 9090X VL530, VL540, VL550, VL570, VL600, VL6040, VL6050, VL6060, VL6070, VL6080, VL6090, VL610, VL620, VL630, VL640, VL660, VM3080, VM3080 AL, VM3090, VM340, VM370, VM4090, VM460, VN2090, VN300, VX680, VX7090 - VENDIMIADORA (01/07 - 12/12), VX7090-OLIVES - VENDIMIADORA SÚPER INTENSIVA OLIVAS (10/10 - 12/13)

IVA non inclusa

Trasporto UE gratuito per ordini 500€

Tutti i marchi appartengono ai rispettivi proprietari e il loro utilizzo è solo a scopo informativo.

WWW.EDUARDOREPUESTOSAGRICOLAS.COM

Controllare Rif. Prima.

NEW HOLLAND-BRAUD COMPATIBLE

EDUARDO

REF.540A

VITE-dado autobloccante-RONDELLA M8X25 (Zn) FISSAGGIO DELLA CUSTODIA GUIDA

920008122+920011230)(SUJECCIÓN GUÍAS-CARCASA)

1620, 1620S, 2420, 2514, 2520, 2620, 2714, 2720, 7030L, 7030M, 7030M H, 8030L, 9030L, 9040L, 9040M, 9050L H, 9050L L, 9050L SH, 9060L, 9060L GE, 9060L H, 9060L SH, 9070L H, 9070L L, 9070L L T5, 9070L SH, 9070M, 9070N H T5, 9070N L, 9070N L T5, 9070 , 9080L, 9080L GE, 9080L H, 9080L SH, 9080N H, 9080N L, 9090L, 9090L GE, 9090L H, 9090L H T4, 9090L H T5, 9090L SH, 9090L SH T4, 9090L SH T5, 9090L T3, 9090X, 9090X GE, 9090X GE T3, 9090X GE T4, 9090X GE T5, 9090X H, 9090X H H, 9090X H T4, 9090X O, 9090X O GE, 9090X O GE T3, 9090X O GE T4, 9090X O GE T5, 9090X O H T4, 9090X O T3, 9090X O T4, 9090X O T5, 9090X OP, 9090X OP GE, 9090X T3, 9090X T4, 9090X T5, 9090X OP, 9090X OP GE, 9090X T3, 9090X T4, 9090X T5, SB33, SB35, SB36, SB52, SB53, SB54, SB55, SB56, SB58, SB60, SB62, SB64, SB65, T140, T240, TB10, TB15, VL5060, VL5080, VL5090, VL530, VL540, VL550, VL570, VL600, VL6040, VL6050, VL6060, VL6070, VL6080, VL6090, VL610, VL620, VL630, VL640, VL660, VM3080, VM3080 AL, VM3090, VM340, VM370, VM4090, VM460, VN2080, VN2090, VN240, VN260, VN300, VX680,

REF.578A

SPLIT DADO M8

Comp. 920019493

7030L, 7030M, 7030M H, 8030L, 9030L, 9040L, 9040M, 9050L H, 9050L L, 9050L SH, 9060L, 9060L GE, 9060L H, 9060L SH, 9070L H, 9070L L, 9070L L T5, 9070L SH, 9070M, 9070N H T5, 9070N L, 9070N L T5, 9070 , 9080L, 9080L GE, 9080L H, 9080L SH, 9080N H, 9080N L, 9090L, 9090L GE, 9090L H, 9090L H T4, 9090L H T5, 9090L SH, 9090L SH T4, 9090L SH T5, 9090L T3, 9090X, 9090X GE, 9090X GE T3, 9090X GE T4, 9090X GE T5, 9090X H, 9090X H H, 9090X H T4, 9090X O, 9090X O GE, 9090X O GE T3, 9090X O GE T4, 9090X O GE T5, 9090X O H T4, 9090X O T3, 9090X O T4, 9090X O T5, 9090X OP, 9090X OP GE, 9090X T3, 9090X T4, 9090X T5, SB33, SB35, SB36, SB53, SB55, SB56, SB58, SB60, SB62, SB64, SB65, TB10, TB15, VL5060, VL5080, VL5090, VL530, VL540, VL550, VL570, VL600, VL6040, VL6050, VL6060, VL6070, VL6080, VL6090, VL610, VL620, VL630, VL640, VL660, VM3080, VM3080 AL, VM3090, VM340, VM370, VM4090, VM460, VN2080, VN2090, VN240, VN260, VN300, VX680, VX7090

REF.578B

SPLIT DADO M10

Comp. 920019492

7030L, 7030M, 7030M H, 8030L, 9030L, 9040L, 9040M, 9050L H, 9050L L, 9050L SH, 9060L, 9060L GE, 9060L H, 9060L SH, 9070L H, 9070L L, 9070L L T5, 9070L SH, 9070M, 9080L, 9080L GE, 9080L H, 9080L SH, 9080N H, 9080N L, 9090L, 9090L GE, 9090L H, 9090L H T4, 9090L H T5, 9090L SH, 9090L SH T4, 9090L SH T5, 9090L T3, 9090X, 9090X GE, 9090X GE T3, 9090X GE T4, 9090X GE T5, 9090X H, 9090X H H, 9090X H T4, 9090X O, 9090X O GE, 9090X O GE T3, 9090X O GE T4, 9090X O GE T5, 9090X O H T4, 9090X O T3, 9090X O T4, 9090X O T5, 9090X OP, 9090X OP GE, 9090X T3, 9090X T4, 9090X T5, SB33, SB35, SB36, SB53, SB55, SB56, SB58, SB60, SB62, SB64, SB65, TB10, TB15, VL5060, VL5080, VL5090, VL530, VL540, VL550, VL570, VL600, VL6040, VL6050, VL6060, VL6070, VL6080, VL6090, VL610, VL620, VL630, VL640, VL660, VM3080, VM3080 AL, VM3090, VM340, VM370, VM4090, VM460, VN2080, VN2090, VN240, VN260, VN300, VX680, VX7090

REF.578C

SPLIT DADO M12

Comp. 920017399

1620, 1620S, 2420, 2520, 2620, 2720, 7030L, 7030M, 7030M H, 8030L, 9030L, 9040L, 9040M, 9050L H, 9050L L, 9050L SH, 9060L, 9060L GE, 9060L H, 9060L SH, 9070L H, 9070L L, 9070L L T5, 9070L SH, 9070M, 9080L, 9080L GE, 9080L H, 9080L SH, 9080N H, 9080N L, 9090L, 9090L GE, 9090L H, 9090L H T4, 9090L H T5, 9090L SH, 9090L SH T4, 9090L SH T5, 9090L T3, 9090X, 9090X GE, 9090X GE T3, 9090X GE T4, 9090X GE T5, 9090X H, 9090X H H, 9090X H T4, 9090X O, 9090X O GE, 9090X O GE T3, 9090X O GE T4, 9090X O GE T5, 9090X O H T4, 9090X O T3, 9090X O T4, 9090X O T5, 9090X OP, 9090X OP GE, 9090X T3, 9090X T4, 9090X T5, SB33, SB35, SB36, SB52, SB53, SB54, SB55, SB56, SB58, SB60, SB62, SB64, SB65, VL5060, VL5080, VL5090, VL530, VL540, VL550, VL570, VL600, VL6040, VL6050, VL6060, VL6070, VL6080, VL6090, VL610, VL620, VL630, VL640, VL660, VM3080, VM3080 AL, VM3090, VM340, VM370, VM4090, VM460, VN2080, VN240, VN260, VX680, VX7090

REF.578D

SPLIT DADO M14

Comp. 920019392

7030M, 7030M H, 8030L, 9030L, 9040L, 9040M, 9050L H, 9050L L, 9050L SH, 9060L, 9060L GE, 9060L H, 9060L SH, 9070L H, 9070L L, 9070L L T5, 9070L SH, 9070M, 9080L, 9080L GE, 9080L H, 9080L SH, 9090L, 9090L GE, 9090L H, 9090L H T4, 9090L H T5, 9090L SH, 9090L SH T4, 9090L SH T5, 9090L T3, 9090X, 9090X GE, 9090X GE T3, 9090X GE T4, 9090X GE T5, 9090X H, 9090X H H, 9090X H T4, 9090X T3, 9090X T4, 9090X T5, SB33, SB35, SB36, SB53, SB55, SB56, SB58, SB60, SB62, SB64, SB65, VL5060, VL5080, VL5090, VL530, VL540, VL550, VL570, VL600, VL6040, VL6050, VL6060, VL6070, VL6080, VL6090, VL610, VL620, VL630, VL640, VL660, VM3080, VM3080 AL, VM3090, VM340, VM370, VM4090, VM460, VX680, VX7090

REF.578E

SPLIT DADO M16

Comp. 920019650

7030L, 7030M, 7030M H, 8030L, 9030L, 9040L, 9040M, 9050L H, 9050L L, 9050L SH, 9060L, 9060L GE, 9060L H, 9060L SH, 9070L H, 9070L L, 9070L L T5, 9070L SH, 9070M, 9080L, 9080L GE, 9080L H, 9080L SH, 9090L, 9090L GE, 9090L H, 9090L H T4, 9090L H T5, 9090L SH, 9090L SH T4, 9090L SH T5, 9090L T3, 9090X, 9090X GE, 9090X GE T3, 9090X GE T4, 9090X GE T5, 9090X H, 9090X H H, 9090X H T4, 9090X O, 9090X O GE, 9090X O GE T3, 9090X O GE T4, 9090X O GE T5, 9090X O H T4, 9090X O T3, 9090X O T4, 9090X O T5, 9090X OP, 9090X OP GE, 9090X T3, 9090X T4, 9090X T5, VL5080, VL5090, VL550, VL570, VL6050, VL6060, VL6070, VL6080, VL6090, VL610, VL620, VL630, VL640, VL660, VM3080 AL, VM3090, VM370, VM4090, VM460, VX680, VX7090

REF.716A

RULLI MOVIMENTO NASTRI TRASPORTATORI

Comp. 84205000

7030L, 7030M, 7030M H, 8030L, 9030L, 9040L, 9040M, 9050L H, 9050L L, 9050L SH, 9060L, 9060L GE, 9060L H, 9060L SH, 9070L H, 9070L L, 9070L L T5, 9070L SH, 9070M, 9080L, 9080L GE, 9080L H, 9080L SH, 9080N H, 9080N L, 9090L, 9090L GE, 9090L H, 9090L H T4, 9090L H T5, 9090L SH, 9090L SH T4, 9090L SH T5, 9090L T3, 9090X, 9090X GE, 9090X GE T3, 9090X GE T4, 9090X GE T5, 9090X H, 9090X H H, 9090X H T4, 9090X O, 9090X O GE, 9090X O GE T3, 9090X O GE T4, 9090X O GE T5, 9090X O H T4, 9090X O T3, 9090X O T4, 9090X O T5, 9090X OP, 9090X OP GE, 9090X T3, 9090X T4, 9090X T5, SB33, SB35, SB36, SB53, SB55, SB56, SB58, SB60, SB62, SB64, SB65, TB10, TB15, VL5060, VL5080, VL5090, VL530, VL540, VL550, VL570, VL600, VL6040, VL6050, VL6060, VL6070, VL6080, VL6090, VL610, VL620, VL630, VL640, VL660, VM3080, VM3080 AL, VM3090, VM340, VM370, VM4090, VM460, VN2080, VN2090, VN240, VN260, VN300, VX680, VX7090

REF.716B

SPOSTA ROSES CINTURE DIRASPATORE

Comp. 84122562

7030M, 7030M H, 8030L, 9040L, 9040M, 9050L H, 9050L L, 9050L SH, 9060L, 9060L GE, 9060L H, 9070L H, 9070L L, 9070L L T5, 9070L SH, 9070M, 9080L, 9080L GE, 9080L H, 9090L, 9090L GE, 9090L H, 9090L H T4, 9090L H T5, 9090L SH T4, 9090L SH T5, 9090L T3, 9090X, 9090X GE T3, 9090X GE T4, 9090X GE T5, 9090X H, 9090X H H, 9090X T3, VL5060, VN2090

REF.716C

MOVIMENTO ASSI FINGER DIRASPATORE

Comp. 84122561

7030L, 7030M, 7030M H, 8030L, 9030L, 9040L, 9040M, 9050L H, 9050L L, 9050L SH, 9060L, 9060L GE, 9060L H, 9070L H, 9070L L, 9070L L T5, 9070L SH, 9070M, 9080L, 9080L GE, 9080L H, 9080N H, 9080N L, 9090L, 9090L GE, 9090L H, 9090L H T4, 9090L H T5, 9090L SH T4, 9090L SH T5, 9090L T3, 9090X, 9090X GE T3, 9090X GE T4, 9090X GE T5, 9090X H, 9090X H H, 9090X H T4, 9090X T3, 9090X T4, 9090X T5, VL5060, VN2080, VN2090

REF.716D

MOVIMENTO SENZA FINE IDRAULICA TESTA DI OLIVA

Comp. 920009489

9060L GE, 9080L GE, 9090L GE, 9090X GE, 9090X GE T3, 9090X GE T4, 9090X GE T5, 9090X O, 9090X O GE, 9090X O GE T3, 9090X O H T4, 9090X O T3, 9090X O T4, 9090X O T5, 9090X OP, 9090X OP GE, T140, T240, VL6060, VL6080, VL6090, VL620, VL640, VL660, VN2080, VX680, VX7090

REF.716E

TIFOSI MOVIMENTO ESTRAZIONE ALTO A DESTRA

Comp. 920019656

7030L, 7030M, 7030M H, 8030L, 9040L, 9040M, 9060L, 9060L GE, 9060L H, 9060L SH, 9080L, 9080L GE, 9080L H, 9080L SH, 9090L, 9090L GE, 9090L H, 9090L SH, 9090X, 9090X GE, 9090X H, 9090X H H, SB33, SB35, SB53, SB55, VL5060, VL5080, VL5090, VL530, VL540, VL550, VL570, VL600, VL6040, VL6050, VL6060, VL6070, VL6080, VL6090, VL610, VL620, VL630, VL640, VL660, VM3080, VM3080 AL, VM3090, VM340, VM370, VM4090, VM460, VN2090, VN300, VX680, VX7090

REF.716H

TIFOSI MOVIMENTO ESTRAZIONE SINISTRA ALTO

Comp. 920019657

7030L, 7030M, 7030M H, 8030L, 9040L, 9040M, 9060L, 9060L GE, 9060L H, 9060L SH, 9080L, 9080L GE, 9080L H, 9080L SH, 9090L, 9090L GE, 9090L H, 9090L SH, 9090X, 9090X GE, 9090X H, 9090X H H, SB33, SB35, SB53, SB55, VL5060, VL5080, VL5090, VL530, VL540, VL550, VL570, VL600, VL6040, VL6050, VL6060, VL6070, VL6080, VL6090, VL610, VL620, VL630, VL640, VL660, VM3080, VM3080 AL, VM3090, VM340, VM370, VM4090, VM460, VN2090, VN300

REF.718A

LED si illumina, LAVORO LUCE 12 / 30V 1200LM

Comp. -

1214, 1620, 1620S, 2414, 2420, 2514, 2520, 2614, 2620, 2714, 2720, 7030L, 7030M, 7030M H, 8030L, 9030L, 9040L, 9040M, 9050L H, 9050L L, 9050L SH, 9060L, 9060L GE, 9060L H, 9060L SH, 9070L H, 9070L L, 9070L L T5, 9070L SH, 9070M, 9080L, 9080L GE, 9080L H, 9080L SH, 9080N H, 9080N L, 9090L, 9090L GE, 9090L H, 9090L H T4, 9090L H T5, 9090L SH, 9090L SH T4, 9090L SH T5, 9090L T3, 9090X, 9090X GE, 9090X GE T3, 9090X GE T4, 9090X GE T5, 9090X H, 9090X H H, 9090X H T4, 9090X O, 9090X O GE, 9090X O GE T3, 9090X O GE T4, 9090X O GE T5, 9090X O H T4, 9090X O T3, 9090X O T4, 9090X O T5, 9090X OP, 9090X OP GE, 9090X T3, 9090X T4, 9090X T5, SB33, SB35, SB36, SB52, SB53, SB54, SB55, SB56, SB58, SB60, SB62, SB64, SB65, VL5060, VL5080, VL5090, VL530, VL540, VL550, VL570, VL600, VL6040, VL6050, VL6060, VL6070, VL6080, VL6090, VL610, VL620, VL630, VL640, VL660, VM3080, VM3080 AL, VM3090, VM340, VM370, VM4090, VM460, VN2080, VN2090, VN240, VN260, VN300, VX680, VX7090

REF.733A

GANCIO

Comp. 920017733

1620, 1620S, 7030L, 7030M, 7030M H, 8030L, 9030L, 9040L, 9040M, 9050L H, 9050L L, 9050L SH, 9060L, 9060L GE, 9060L H, 9060L SH, 9070L H, 9070L L, 9070L L T5, 9070L SH, 9070M, 9080L, 9080L GE, 9080L H, 9080L SH, 9090L, 9090L GE, 9090L H, 9090L H T4, 9090L H T5, 9090L SH, 9090L SH T4, 9090L SH T5, 9090L T3, 9090X, 9090X GE, 9090X GE T3, 9090X GE T4, 9090X GE T5, 9090X H, 9090X H H, 9090X H T4, 9090X O GE T3, 9090X O GE T4, 9090X O GE T5, 9090X O H T4, 9090X O T3, 9090X O T4, 9090X O T5, 9090X T3, 9090X T4, 9090X T5, SB33, SB35, SB36, SB53, SB55, SB56, SB58, SB60, SB62, SB64, SB65, TB10, TB15, VL5060, VL5080, VL5090, VL530, VL540, VL550, VL570, VL600, VL6040, VL6050, VL6060, VL6070, VL6080, VL6090, VL610, VL620, VL630, VL640, VL660, VM3080, VM3080 AL, VM3090, VM340, VM370, VM4090, VM460, VN2080, VN2090, VN240, VN260, VN300, VX680, VX7090

REF.743B

VITE M8x20 testa + SPLIT + rondella

Comp. -

9030L, 9050L H, 9050L L, 9070L H, 9070L L, 9070L L T5, 9070M, 9090L H T4, 9090L H T5, 9090L T3, 9090X H T4, 9090X T3, 9090X T4, 9090X T5,0,31,0,5

REF.745A

PIASTRA DI USURA 1mm

Comp. 84602774

9090X O, 9090X O GE, 9090X O GE T3, 9090X O GE T4, 9090X O GE T5, 9090X O H T4, 9090X O T3, 9090X O T4, 9090X O T5, 9090X OP, 9090X OP GE, VX7090

REF.710A*

BRAUD TIRANDO pignone per CATENA DESTRA

Comp. 944029254,944005

7030L, 7030M, 7030M H, 8030L, 9030L, 9040L, 9040M, 9050L H, 9050L L, 9050L SH, 9060L, 9060L GE, 9060L H, 9060L SH, 9070L H, 9070L L, 9070L L T5, 9070L SH, 9070M, 9080L, 9080L GE, 9080L H, 9080L SH, 9080N H, 9080N L, 9090L, 9090L GE, 9090L H, 9090L H T4, 9090L H T5, 9090L SH, 9090L SH T4, 9090L SH T5, 9090L T3, **9090X, 9090X GE, 9090X GE T3, 9090X GE T4, 9090X GE T5, 9090X H, 9090X H H, 9090X H T4, 9090X O,** 9090X O GE, 9090X O GE T3, 9090X O GE T4, 9090X O GE T5, 9090X O H T4, 9090X O T3, 9090X O T4, 9090X O T5, 9090X OP, 9090X OP GE, 9090X T3, 9090X T4, 9090X T5, SB33, SB35, SB36, SB53, SB55, SB56, SB58, SB60, SB62, SB64, SB65, VL5060, VL5080, VL5090, VL530, VL540, VL550, VL570, VL600, VL6040, VL6050, VL6060, VL6070, VL6080, VL6090, VL610, VL620, VL630, VL640, VL660, VM3080, VM3080 AL, VM3090, VM340, VM370, VM4090, VM460, VN2080, VN2090, VN240, VN260, VN300, VX680, VX7090

REF.710B*

BRAUD TIRANDO pignone per SINISTRA CATENA

Comp. 944029255,944005

7030L, 7030M, 7030M H, 8030L, 9030L, 9040L, 9040M, 9050L H, 9050L L, 9050L SH, 9060L, 9060L GE, 9060L H, 9060L SH, 9070L H, 9070L L, 9070L L T5, 9070L SH, 9070M, 9080L, 9080L GE, 9080L H, 9080L SH, 9080N H, 9080N L, 9090L, 9090L GE, 9090L H, 9090L H T4, 9090L H T5, 9090L SH, 9090L SH T4, 9090L SH T5, 9090L T3, 9090X, 9090X GE, 9090X GE T3, 9090X GE T4, 9090X GE T5, 9090X H, 9090X H H, 9090X H T4, 9090X O, 9090X O GE, 9090X O GE T3

REF.711F

olive CANVAS DESTRA, 9090 olive

Comp. 84324502

9090X O, 9090X O GE, 9090X O GE T3, 9090X O GE T4, 9090X O GE T5, 9090X O H T4, 9090X O T3, 9090X O T4, 9090X O T5, 9090X OP, 9090X OP GE, VX7090

REF.711G

olive SINISTRA tela, 9090 olive

Comp. 84324501

9090X O, 9090X O GE, 9090X OP, 9090X OP GE, VX7090

Tutti i marchi appartengono ai rispettivi proprietari e il loro utilizzo è solo a scopo informativo.

WWW.EDUARDOREPUESTOSAGRICOLAS.COM

IVA non inclusa

Trasporto UE gratuito per ordini 500€

NEW HOLLAND-BRAUD COMPATIBLE

EDUARDO

PATTINI - GUIDE DESTEMMER (SPESSORE 26mm, 5mm MAGGIORE rispetto alle referenze)

SB, VL, VX (26mm, +5mm)

REF.254A

Comp. 944027443

SB33, SB35, SB36, SB53, SB55, SB56, SB58, SB60, SB62, SB64, SB65, VL5060, VL5080, VL5090, VL530, VL540, VL550, VL570, VL600, VL6040, VL6050, VL6060, VL6070, VL6080, VL6090, VL610, VL620,

REF.255A

Comp. 944030770

SB33, SB35, SB36, SB53, SB55, SB56, SB58, SB60, SB62, SB64, SB65, VL5060, VL5080, VL5090, VL530, VL540, VL550, VL570, VL600, VL6040, VL6050, VL6060, VL6070, VL6080, VL6090, VL610, VL620,

REF.256A

Comp. 944030771

SB33, SB35, SB36, SB53, SB55, SB56, SB58, SB60, SB62, SB64, SB65, VL5060, VL5080, VL5090, VL530, VL540, VL550, VL570, VL600, VL6040, VL6050, VL6060, VL6070, VL6080, VL6090, VL610, VL620,

REF.257A

Comp. 944030810

SB33, SB35, SB36, SB53, SB55, SB56, SB58, SB60, SB62, SB64, SB65, VL600, VL6040, VL6050, VL6060, VL6070, VL6080, VL6090, VL610, VL620, VL630, VL640, VL660, VM4090, VM460, VX680, VX7090

REF.258A

Comp. 944030811

SB33, SB35, SB36, SB53, SB55, SB56, SB58, SB60, SB62, SB64, SB65, VL600, VL6040, VL6050, VL6060, VL6070, VL6080, VL6090, VL610, VL620, VL630, VL640, VL660, VM4090, VM460, VX680, VX7090

REF.259A

Comp. 944030808

SB33, SB35, SB36, SB53, SB55, SB56, SB58, SB60, SB62, SB64, SB65, VL600, VL6040, VL6050, VL6060, VL6070, VL6080, VL6090, VL610, VL620, VL630, VL640, VL660, VM4090, VM460, VX680, VX7090

REF.260A

Comp. 944030809

SB33, SB35, SB36, SB53, SB55, SB56, SB58, SB60, SB62, SB64, SB65, VL600, VL6040, VL6050, VL6060, VL6070, VL6080, VL6090, VL610, VL620, VL630, VL640, VL660, VM4090, VM460, VX680, VX7090

REF.261A

Comp. 944027448 (94cm)

SB33, SB35, SB36, SB53, SB55, SB56, SB58, SB60, SB62, SB64, VL600, VL6040, VL6050, VL6060, VL6070, VL6080, VL6090, VL610, VL620, VL630, VL640, VL660, VM4090, VM460, VX680, VX7090

REF.261B

Comp. 944030102, 944030101 (84cm)

SB33, SB35, SB53, SB55, VL5060, VL5080, VL5090, VL530, VL540, VL550, VL570, VM3080, VM3090, VM340, VM370, VN2090, VN300

REF.266A

Comp. 944031960

SB36, SB56, SB58, SB60, SB62, SB64, SB65, VL600, VL6040, VL6050, VL6060, VL6070, VL6080, VL6090, VL610, VL620, VL630, VL640, VL660, VM4090, VM460, VX680, VX7090

REF.262A

Comp. KIT 87629867 (VL, SB, VX) 18 PEZZI

4x254A, 2x255A, 2x256A, 2x257A, 2x258A, 2x259A, 2x260A, 2x266A

REF.262B

Comp. KIT 84122582 (VL, SB, VX) 16 PEZZI

4x254A, 2x255A, 2x256A, 2x257A, 2x258A, 2x259A, 2x260A

SB33, SB35, SB55, VL5080, VL5090, VL530, VL540, VL550, VM340, VM380

REF.262C

Comp. KIT 16 PEZZI

4x254A, 2x255A, 2x256A, 2x581A, 2x582A, 2x583A, 2x583B

REF.581A

Comp. 944032089

SB33, SB35, SB53, SB55, VL5060, VL5080, VL5090, VL530, VL540, VL550, VL570, VM3080, VM3080 AL, VM3090, VM340, VM370, VN2090

REF.582A

Comp. 944030230

SB33, SB35, SB53, SB55, VL5060, VL5080, VL5090, VL530, VL540, VL550, VL570, VM3080, VM3080 AL, VM3090, VM340, VM370, VN2090

REF.583A

Comp. 944032090

SB33, SB35, SB53, SB55, VL5060, VL5080, VL5090, VL530, VL540, VL550, VL570, VM3080, VM3080 AL, VM3090, VM340, VM370, VN2090

REF.583B

Comp. 944030100

SB33, SB35, SB53, SB55, VL5060, VL5080, VL5090, VL530, VL540, VL550, VL570, VM3080, VM3080 AL, VM3090, VM340, VM370, VN2090

9040M, 9040L, 9060L, 9090L, 9080L,9090X

REF.264A

Comp. 84234229

7030L, 7030M, 7030M H, 8030L, 9030L, 9040L, 9040M, 9050L H, 9050L L, 9060L, 9060L GE, 9060L H, 9060L SH, 9070L H, 9070L L, 9070L L T5, 9070M, 9080L, 9080L GE, 9080L H, 9080L SH, 9090L, 9090L

REF.265A

Comp. 84248137

7030L, 7030M, 7030M H, 8030L, 9030L, 9040L, 9040M, 9050L H, 9050L L, 9060L, 9060L GE, 9060L H, 9060L SH, 9070L H, 9070L L, 9070L L T5, 9070M, 9080L, 9080L GE, 9080L H, 9080L SH, 9090L, 9090L

REF.266B

Comp. 84243927

7030L, 7030M, 7030M H, 8030L, 9040L, 9040M, 9060L, 9060L GE, 9060L H, 9060L SH, 9080L, 9080L GE, 9080L H, 9080L SH, 9090L, 9090L GE, 9090L H, 9090X, 9090X H, 9090X H H

REF.267A

Comp. 84248147

9040L, 9040M, 9080L, 9090L, 9090X

REF.268A

Comp. 84248148

7030L, 7030M, 7030M H, 8030L, 9040L, 9040M, 9060L, 9060L GE, 9060L H, 9060L SH, 9080L, 9080L GE, 9080L H, 9080L SH, 9090L, 9090L GE, 9090L H, 9090X, 9090X H, 9090X H H

REF.269A

Comp. KIT 18 PEZZI

12x264A, 2x265A, 4x266B

REF.719A

Comp. 84243939

7030L, 7030M, 7030M H, 8030L, 9040L, 9040M, 9060L, 9060L GE, 9060L H, 9060L SH, 9080L, 9080L GE, 9080L H, 9080L SH, 9090L, 9090L GE, 9090L H, 9090X, 9090X H, 9090X H H

REF.720A

Comp. 87483704

7030L, 7030M, 7030M H, 8030L, 9030L, 9040L, 9040M, 9050L H, 9050L L, 9050L SH, 9060L, 9060L GE, 9060L H, 9060L SH, 9070L H, 9070L L, 9070L L T5, 9070L SH, 9070M, 9080L, 9080L GE, 9080L H, 9080L SH, 9090L, 9090L GE, 9090L H, 9090L H T4, 9090L H T5, 9090L SH, 9090L SH T4, 9090L SH T5, 9090L T3, 9090X, 9090X GE, 9090X GE T3, 9090X GE T4, 9090X GE T5, 9090X H, 9090X H H, 9090X H T4, 9090X T3, 9090X T4, 9090X T5

REF.738A

Comp. 84287465

7030L, 7030M, 7030M H, 8030L, 9040L, 9040M, 9050L L, 9060L, 9060L GE, 9060L H, 9070L L, 9070L L T5, 9070M, 9080L, 9080L GE, 9080L H, 9080N H, 9080N L, 9090L, 9090L GE, 9090L H, 9090L H T4, 9090L H T5, 9090L T3, 9090X, 9090X H, 9090X H H

REF.738B

Comp. 84321487 KIT 48 Pcs.

12x264A, 2x265A, 4x266B, 1x267A, 1x267B, 4x719A, 24x738A

IVA non inclusa

Trasporto UE gratuito per ordini 500€

Tutti i marchi appartengono ai rispettivi proprietari e il loro utilizzo è solo a scopo informativo.

NEW HOLLAND-BRAUD COMPATIBLE

EDUARDO

NYLON - GUIDE DESTEMMER (SPESSORE 26mm, 6mm IN PIU 'rispetto alle referenze)

9070L L, 9050L H, 9050L L, 9070L H, 9030L H T4, 9070M, 9090X GE T4, 9090 H T4 (26mm , orig + 6mm)

REF.265A

Comp. 84248137

7030L, 7030M, 7030M H, 8030L, 9030L, 9040L, 9040M, 9050L H, 9050L L, 9060L, 9060L GE, 9060L H, 9060L SH, 9070L H, 9070L L, 9070L L T5, 9070M, 9080L, 9080L GE, 9080L H, 9080L SH, 9090L, 9090L

REF.269B

Comp. KIT (28 UDS)

2x265A, 4x741A, 2x741B, 2x741C, 4x741D, 2x741E, 2x741F, 8x741G, 1x742C, 1x742D

REF.741A

Comp. 47966974

9030L, 9050L H, 9050L L, 9070L H, 9070L L, 9070L L T5, 9070M, 9090L H T4, 9090L H T5, 9090L T3, 9090X H T4, 9090X T3, 9090X T4, 9090X T5

REF.741B

Comp. 51417647

9050L H, 9050L L, 9070L H, 9070L L, 9070L L T5, 9090L H T4, 9090L H T5, 9090L T3, 9090X H T4, 9090X T3, 9090X T4, 9090X T5

REF.741C

Comp. 51417695

9050L H, 9050L L, 9070L H, 9070L L, 9070L L T5, 9090L H T4, 9090L H T5, 9090L T3, 9090X H T4, 9090X T3, 9090X T4, 9090X T5

REF.741D

Comp. 51417642

9050L H, 9050L L, 9070L H, 9070L L, 9070L L T5, 9090L H T4, 9090L H T5, 9090L T3, 9090X H T4, 9090X T3, 9090X T4, 9090X T5

REF.741E

Comp. 51417655

9050L H, 9050L L, 9070L H, 9070L L, 9070L L T5, 9090L H T4, 9090L H T5, 9090L T3, 9090X H T4, 9090X T3, 9090X T4, 9090X T5

REF.741F

Comp. 51417665

9050L H, 9050L L, 9070L H, 9070L L, 9070L L T5, 9090L H T4, 9090L H T5, 9090L T3, 9090X H T4, 9090X T3, 9090X T4, 9090X T5

REF.741G

Comp. 51417653

9050L H, 9050L L, 9070L H, 9070L L, 9070L L T5, 9090L H T4, 9090L H T5, 9090L T3, 9090X H T4, 9090X T3, 9090X T4, 9090X T5

REF.742C

Comp. 48145277

9030L, 9050L H, 9050L L, 9070L H, 9070L L, 9070L L T5, 9070M, 9090L H T4, 9090L H T5, 9090L T3, 9090X H T4, 9090X T3, 9090X T4, 9090X T5

REF.742D

Comp. 48145279

9030L, 9050L H, 9050L L, 9070L H, 9070L L, 9070L L T5, 9070M, 9090L H T4, 9090L H T5, 9090L T3, 9090X H T4, 9090X T3, 9090X T4, 9090X T5

9090X OLIVE

ACCIAIO ANTIATTRITO

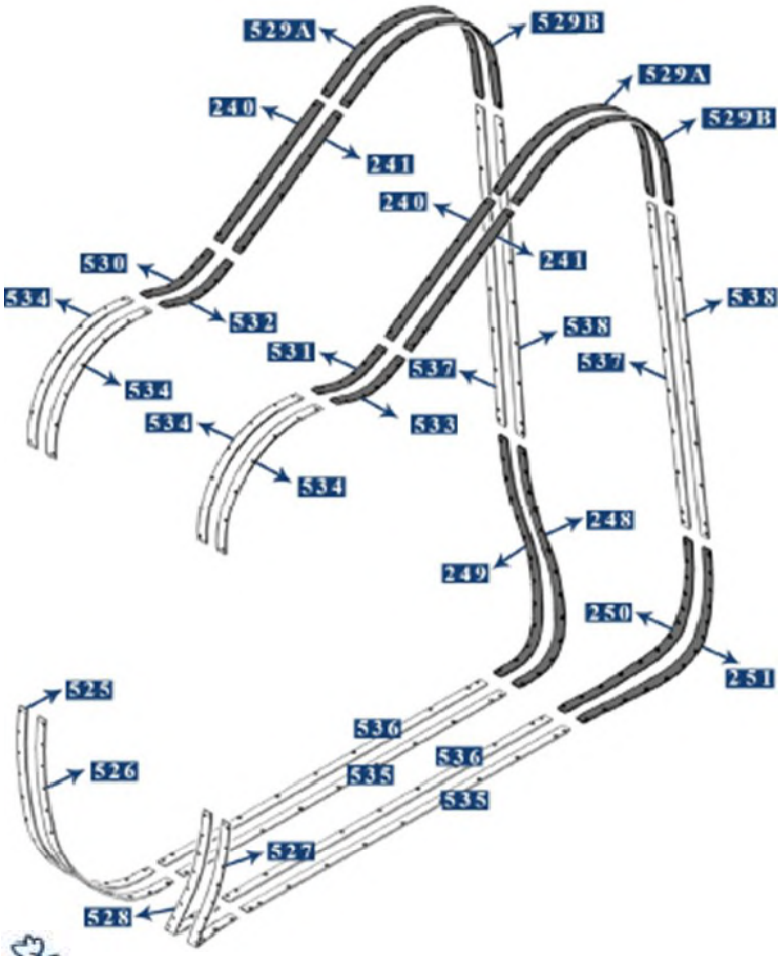

	ANTERIORE	
REF.525	Fuori sinistra	Comp. 87486375
REF.526	All'interno sinistra	Comp. 87486377
REF.527	Proprio davanti	Comp. 87486376
REF.528	Proprio davanti	Comp. 87486378
	POSTERIORE	
REF.248	All'interno sinistra	Comp. 944023837
REF.249	Fuori sinistra	Comp. 944023838
REF.250	Proprio all'interno	Comp. 944023835
REF.251	Proprio davanti	Comp. 944023836
	ALTRO	
REF.529A	Curva posteriore destra	Comp. 944020859
REF.529B	fuori sinistra	Comp. 944024537
REF.240	A destra in alto a destra	Comp. 944015638
REF.241	A sinistra in alto a destra	Comp. 944015639
REF.530	Curva pignone sinistra	Comp. 84391127
REF.531	Curva pignone sinistra	Comp. 84391129
REF.532	Curva pignone destra	Comp. 84391128
REF.533	Curva pignone destra	Comp. 84391130
REF.534	Curva anteriore	Comp. 84391069
REF.535	Lungo rettilineo fondo	Comp. 87486373
REF.536	Lungo rettilineo fondo	Comp. 87486374
REF.537	Lungo rettilineo laterale	Comp. 944020862
REF.538	Lungo rettilineo laterale	Comp. 944020863
REF.539	KIT 16 PEZZI	
	1x248 1x249 1x250 1x251 2x529A	2x529B 2x240 2x241
	1x530 1x531 1x532 1x533	
REF.543A	KIT 8 PEZZI	
	1x525 1x526 1x527 1x528 1x248	1x249 1x250 1x251
REF.543C	KIT 24 PEZZI	
	1x525 1x526 1x527 1x528 1x248	1x249 1x250 1x251
	2x529A 2x529B 2x240 2x241	1x530 1x531 1x532
	1x533 4x534	

Tutti i marchi appartengono ai rispettivi proprietari e il loro utilizzo è solo a scopo informativo.

Controllare Rif. Prima.

WWW.EDUARDOREPUESTOSAGRICOLAS.COM

IVA non inclusa

Trasporto UE gratuito per ordini 500€

7090X OLIVE

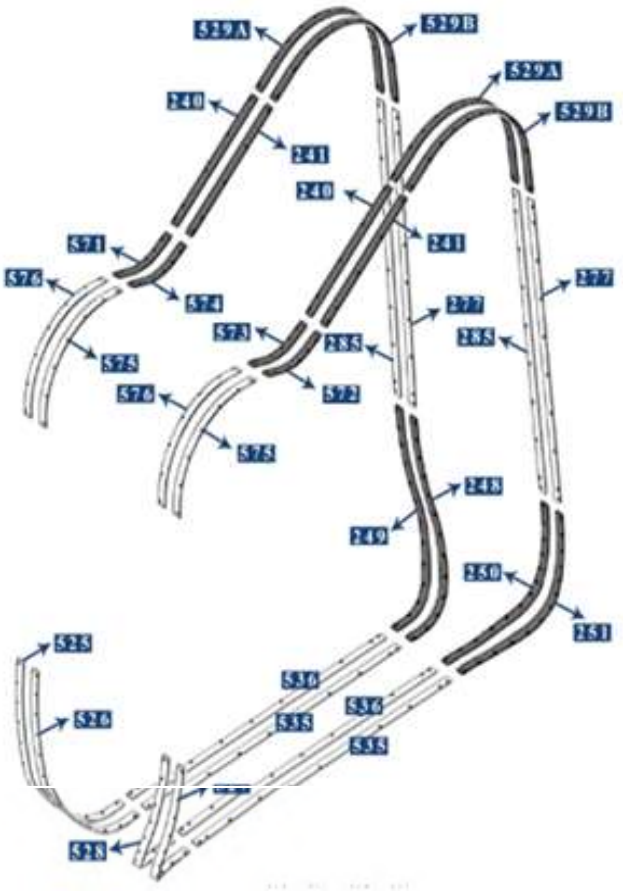

	ANTERIORE	
REF.525	Fuori sinistra	Comp. 87486375
REF.526	All'interno sinistra	Comp. 87486377
REF.527	Proprio davanti	Comp. 87486376
REF.528	Proprio davanti	Comp. 87486378
	POSTERIORE	
REF.248	All'interno sinistra	Comp. 944023837
REF.249	Fuori sinistra	Comp. 944023838
REF.250	Proprio all'interno	Comp. 944023835
REF.251	Proprio davanti	Comp. 944023836
	ALTRO	
REF.529A	Curva posteriore destra	Comp. 944020859
REF.529B	fuori sinistra	Comp. 944024537
REF.240	A destra in alto a destra	Comp. 944015638
REF.241	A sinistra in alto a destra	Comp. 944015639
REF.571	Curva pignone sinistra	Comp. 87499779
REF.572	Curva pignone sinistra	Comp. 87499781
REF.573	Curva pignone destra	Comp. 87499780
REF.574	Curva pignone destra	Comp. 87499778
REF.575	Curva anteriore destro	Comp. 944032892
REF.576	Sinistra curva anteriore	Comp. 944032893
REF.535	Lungo rettilineo fondo	Comp. 87486373
REF.536	Lungo rettilineo fondo	Comp. 87486374
REF.285	Lungo rettilineo laterale	Comp. 944020863
REF.277	Lungo rettilineo laterale	Comp. 944020862
REF.543A	KIT 8 PEZZI	1x525 1x526 1x527 1x528 1x248 1x249 1x250 1x251
REF.577	KIT 16 PEZZI	1x248 1x249 1x250 1x251 1x571 1x572 1x573 1x574 2x529A 2x529B 2x240 2x241
REF.543B	KIT 24 PEZZI	1x525 1x526 1x527 1x528 1x248 1x249 1x250 1x251 2x529 2x529B 2x240 2x241

9090X

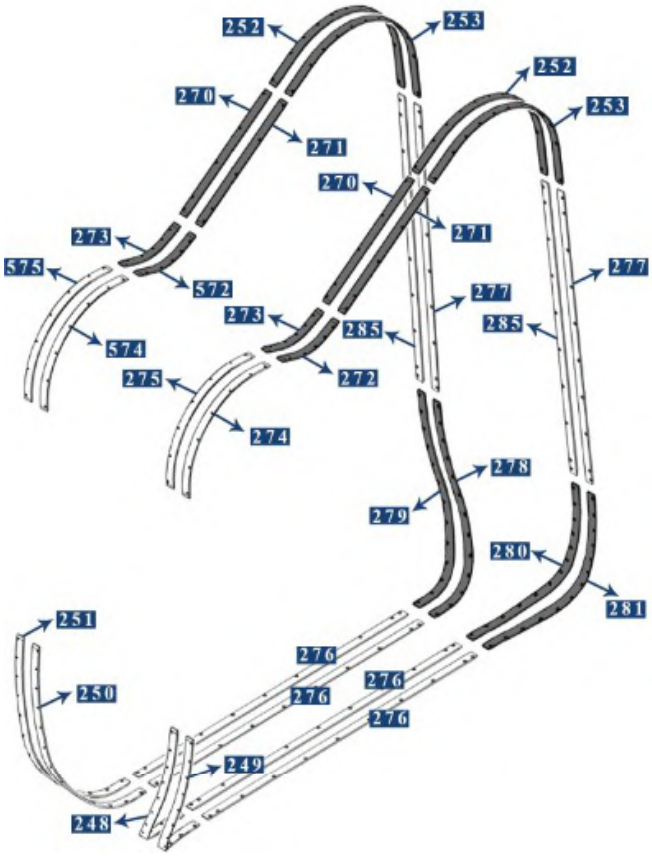

	ANTERIORE	
REF.248	All'interno sinistra	Comp. 944023837
REF.249	Fuori sinistra	Comp. 944023838
REF.250	Proprio all'interno	Comp. 944023835
REF.251	Proprio davanti	Comp. 944023836
	POSTERIORE	
REF.278	All'interno sinistra	Comp. 944020882
REF.279	Fuori sinistra	Comp. 944020880
REF.280	Proprio all'interno	Comp. 944020883
REF.281	Proprio davanti	Comp. 944020881
	ALTRO	
REF.252	Curva posteriore destra	Comp. 84470244
REF.253	Curva posteriore sinistro	Comp. 84470245
REF.270	A destra in alto a destra	Comp. 87644834
REF.271	A sinistra in alto a destra	Comp. 87644833
REF.272	Curva pignone sinistra	Comp. 87644822
REF.273	Curva pignone destra	Comp. 87644823
REF.274	Curva anteriore destro	Comp. 84478586
REF.275	Sinistra curva anteriore	Comp. 84478585
REF.276	Lungo rettilineo fondo	Comp. 944020750
REF.285	Lungo rettilineo laterale	Comp. 944020863
REF.277	Lungo rettilineo laterale	Comp. 944020862
REF.542A	KIT 8 PEZZI	1x248 1x249 1x250 1x251 1x278 1x279 1x280 1x281
REF.523A	KIT 16 PEZZI	1x278 1x279 1x280 1x281 2x252 2x253 2x270 2x271 2x272 2x273
REF.542C	KIT 24 PEZZI	1x248 1x249 1x250 1x251 1x278 1x279 1x280 1x281

IVA non inclusa
Trasporto UE gratuito per ordini 500€

Tutti i marchi appartengono ai rispettivi proprietari e il loro utilizzo è solo a scopo informativo.

NEW HOLLAND-BRAUD COMPATIBLE

EDUARDO

9040L, 9060L, 9080L, 9090L, 9040M

ANTERIORE/POSTERIORE

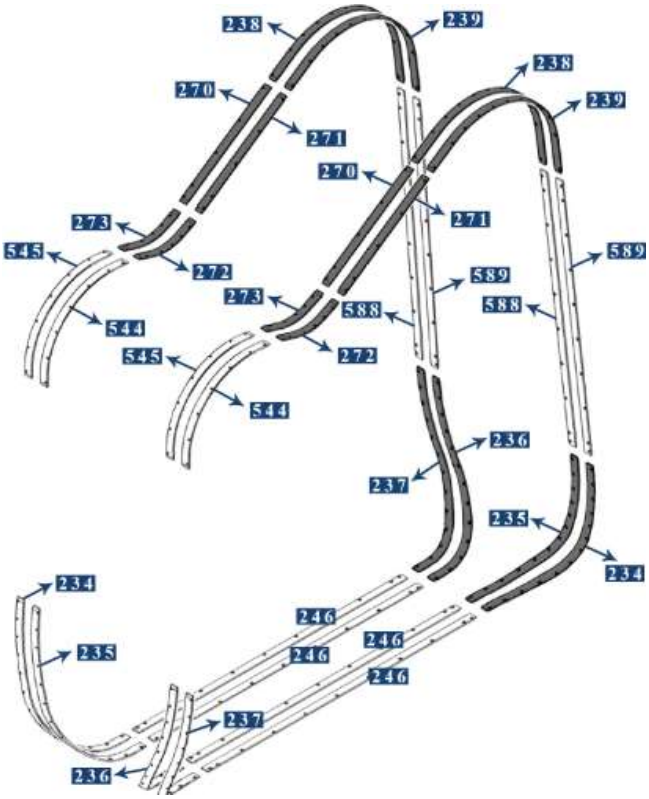

REF.234	Esterno destro / sinistro	Comp. 944006223
REF.235	All'interno sinistra / destra	Comp. 944006222
REF.236	All'interno destra / sinistra	Comp. 944006220
REF.237	Esterno a sinistra / destra	Comp. 944006221
REF.238	Curva posteriore destra	Comp. 944013735
REF.239	Curva posteriore sinistro	Comp. 944013736
REF.270	A destra in alto a destra	Comp. 87644834
REF.271	A sinistra in alto a destra	Comp. 87644833
REF.272	Curva pignone sinistra	Comp. 87644822
REF.273	Curva pignone destra	Comp. 87644823
REF.544	Curva anteriore destro	Comp. 87644825
REF.545	Sinistra curva anteriore	Comp. 87644824
REF.246	Lungo rettilineo fondo	Comp. 944005797
REF.588	Lungo rettilineo laterale	Comp. 944027192
REF.589	Lungo rettilineo laterale	Comp. 944027193
REF.541A	KIT 8 PEZZI	2x234 2x235 2x236 2x237
REF.544A	KIT 16 PEZZI	1x234 1x235 1x236 1x237 2x238 2x239 2x270 2x271 2x272 2x273
REF.541D	KIT 24 PEZZI	2x234 2x235 2x236 2x237 2x238 2x239 2x270 2x271 2x272 2x273 2x544 2x545

SB36 OPZIONE 1 SB56, SB58, SB60, SB62, SB64

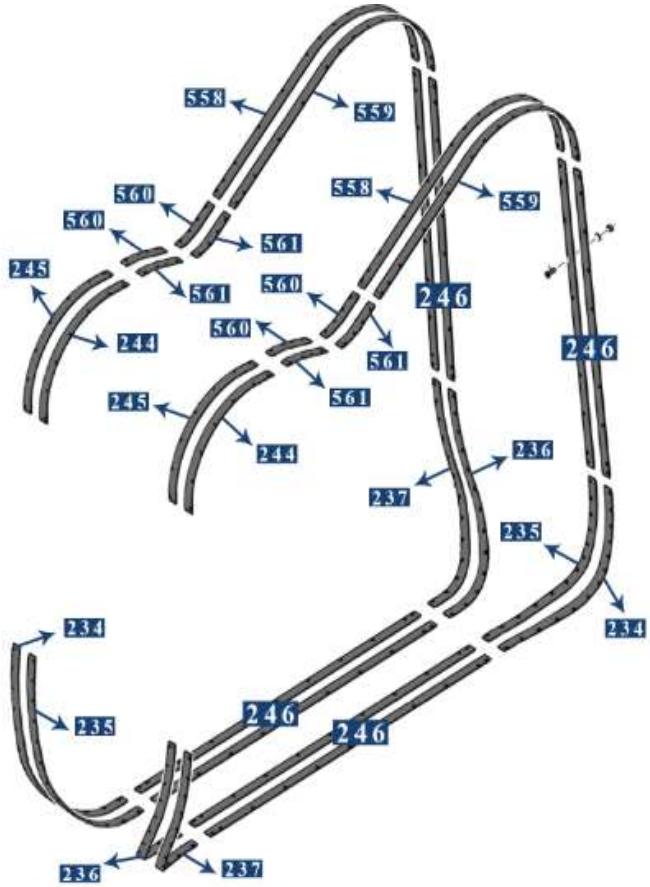

REF.234	Esterno destro / sinistro	Comp. 944006223
REF.235	All'interno sinistra / destra	Comp. 944006222
REF.236	All'interno destra / sinistra	Comp. 944006220
REF.237	Esterno a sinistra / destra	Comp. 944006221
REF.558	Curva posteriore destra	Comp. 944007948
REF.559	Sinistra curva posteriore	Comp. 944007949
REF.560	Curva pignone destra	Comp. 944007945
REF.561	Sinistra pignone curva	Comp. 944007944
REF.244	Sinistra curva anteriore	Comp. 944007947
REF.245	curva anteriore destro	Comp. 944007946
REF.246	Lungo rettilineo fondo	Comp. 944005797
REF.541A	KIT 8 PEZZI	2x234 2x235 2x236 2x237
REF.522B	KIT 9965156 16 pezzi	1x234 1x235 1x236 1x237 2x558 2x559 4x560 4x561
REF.541E	KIT 24 PEZZI	2x234 2x235 2x236 2x237 2x558 2x559 4x560 4x561 2x244 2x245

Tutti i marchi appartengono ai rispettivi proprietari e il loro utilizzo è solo a scopo informativo.

IVA non inclusa

Controllare Rif. Prima.

WWW.EDUARDOREPUESTOSAGRICOLAS.COM

Trasporto UE gratuito per ordini 500€

NEW HOLLAND-BRAUD COMPATIBLE

EDUARDO

SB33, SB35, SB53, SB55

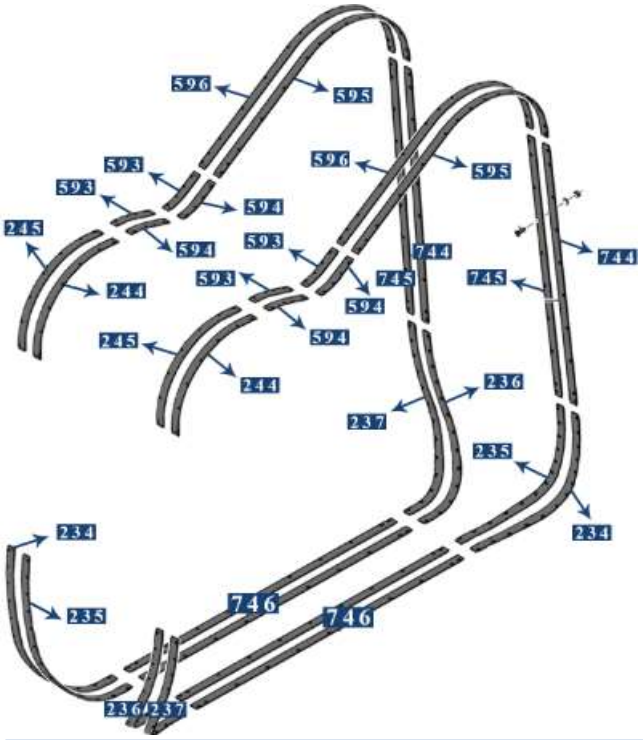

REF.234	Esterno destro / sinistro	Comp. 944006223
REF.235	All'interno sinistra / destra	Comp. 944006222
REF.236	All'interno destra / sinistra	Comp. 944006220
REF.237	Esterno a sinistra / destra	Comp. 944006221
REF.596	Curva posteriore destra	Comp. 944013294
REF.595	Sinistra curva posteriore	Comp. 944013295
REF.594	Curva pignone destra	Comp. 3 x Ø
REF.593	Sinistra pignone curva	Comp. 3 x Ø
REF.244	Sinistra curva anteriore	Comp. 944007947
REF.245	curva anteriore destro	Comp. 944007946
REF.744	Lungo rettilineo laterale	Comp. 944013298
REF.745	Lungo rettilineo laterale	Comp. 944013299
REF.746	rettilineo fondo	Comp. 944009291
REF.541A	KIT 8 PEZZI	2x234 2x235 2x236 2x237
REF.522C	KIT 9964808 20 pezzi	Comp. - 2x234 2x235 2x236 2x237 2x596 2x595 4x594 4x593
REF.541F	KIT 24 PEZZI	2x234 2x235 2x236 2x237 2x596 2x595 4x594 4x593 2x244 2x245

VX7090, VX680, SB65

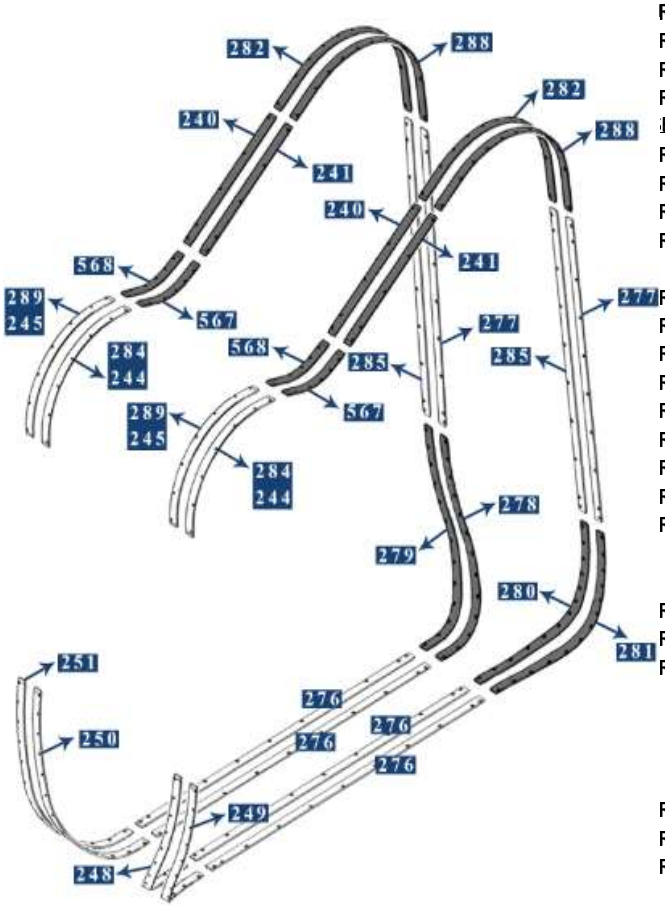

	ANTERIORE	
REF.248	All'interno sinistra	Comp. 944023837
REF.249	Fuori sinistra	Comp. 944023838
REF.250	Proprio all'interno	Comp. 944023835
REF.251	Proprio davanti	Comp. 944023836
	ERAS	
REF.278	All'interno sinistra	Comp. 944020882
REF.279	Fuori sinistra	Comp. 944020880
REF.280	Proprio all'interno	Comp. 944020883
REF.281	Proprio davanti	Comp. 944020881
	ALTRO	
REF.282	Curva posteriore destra	Comp. 944020859
REF.288	Curva posteriore sinistro	Comp. 944024537
REF.240	A destra in alto a destra	Comp. 944015638
REF.241	A sinistra in alto a destra	Comp. 944015639
REF.567	Curva pignone sinistra	Comp. 944015993
REF.568	Curva pignone destra	Comp. 944015994
REF.276	Lungo rettilineo fondo	Comp. 944020750
REF.285	Lungo rettilineo laterale	Comp. 944020863
REF.277	Lungo rettilineo laterale	Comp. 944020862
	VX7090 / VX680	
REF.284	curva anteriore destro	Comp. 944032892
REF.289	Lasciato ext curva anteriore	Comp. 944032893
REF.542B	KIT 24 PEZZI	1x248 1x249 1x250 1x251 1x278 1x279 1x280 1x281 2x282 2x288 2x240 2x241 2x567 2x568 2x284 2x289
	SB65	
REF.244	Sinistra curva anteriore	Comp. 944007947
REF.245	curva anteriore destro	Comp. 944007946
REF.542A	KIT 8 PEZZI	1x248 1x249 1x250 1x251 1x278 1x279 1x280 1x281
REF.524	KIT 16 PEZZI	1x278 1x279 1x280 1x281 2x282 2x288 2x240 2x241 2x567 2x 568
REF.542D	KIT 24 PEZZI	1x248 1x249 1x250 1x251 1x278 1x279 1x280 1x281 2x282 2x288 2x240 2x241 2x567 2x568 2x244 2x245

IVA non inclusa

Trasporto UE gratuito per ordini 500€

Tutti i marchi appartengono ai rispettivi proprietari e il loro utilizzo è solo a scopo informativo.

NEW HOLLAND-BRAUD COMPATIBLE

EDUARDO

VL600, VL6040, VL6050, VL6060, VL6070, VL6080, VL6090, VL610, VL620, VL630, VL640, VL660 — OPZIONE 2 — **SB56, SB58, SB60, SB62, SB64**

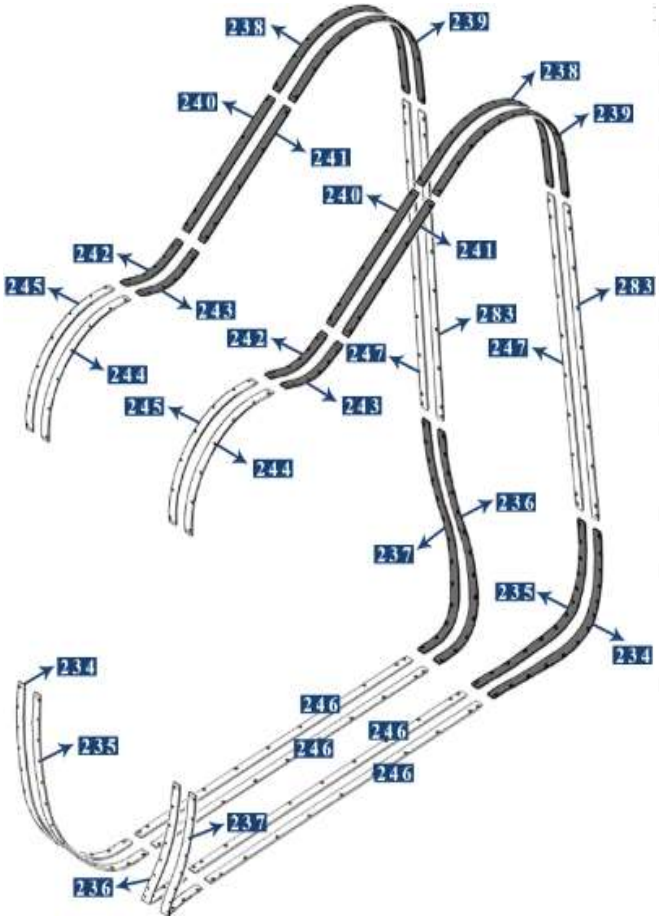

ANTERIORE/POSTERIORE

REF.234	Esterno destro / sinistro	Comp. 944006223
REF.235	All'interno sinistra / destra	Comp. 944006222
REF.236	All'interno destra / sinistra	Comp. 944006220
REF.237	Esterno a sinistra / destra	Comp. 944006221
REF.238	Curva posteriore destra	Comp. 944013735
REF.239	Curva posteriore sinistro	Comp. 944013736
REF.240	A destra in alto a destra	Comp. 944015638
REF.241	A sinistra in alto a destra	Comp. 944015639
REF.242	Curva pignone sinistra	Comp. 944022396
REF.243	Curva pignone destra	Comp. 944022397
REF.244	Sinistra curva anteriore	Comp. 944007947
REF.245	curva anteriore destro	Comp. 944007946
REF.246	Lungo rettilineo fondo	Comp. 944005797
REF.247	Lungo rettilineo laterale	Comp. 944015929
REF.283	Lungo rettilineo laterale	Comp. 944015930
REF.541A	KIT 8 PEZZI	2x234 2x235 2x236 2x237
REF.522A	KIT 16 pezzi	1x234 1x235 1x236 1x237 2x238 2x239 2x240 2x241 2X242 2X243
REF.541B	KIT 24 PEZZI	2x234 2x235 2x236 2x2387 2x238 2x239 2x240 2x241 2x242 2x243 2x244 2x245

VL5060, VL5080, VL5090, VL530, VL540, VL550, VL570

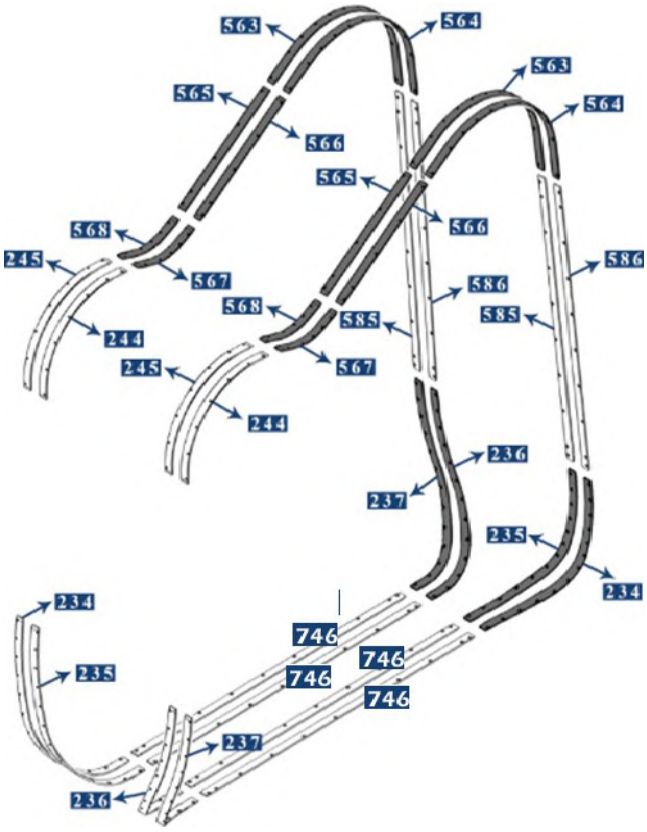

ANTERIORE/POSTERIORE

REF.234	Esterno destro / sinistro	Comp. 944006223
REF.235	All'interno sinistra / destra	Comp. 944006222
REF.236	All'interno destra / sinistra	Comp. 944006220
REF.237	Esterno a sinistra / destra	Comp. 944006221
REF.563	Curva posteriore destra	Comp. 944015982
REF.564	Curva posteriore sinistro	Comp. 944015983
REF.565	A destra in alto a destra	Comp. 944015712
REF.566	Sinistra in alto a destra	Comp. 944015713
REF.567	Curva pignone sinistra	Comp. 944015993
REF.568	Curva pignone destra	Comp. 944015994
REF.244	Sinistra curva anteriore	Comp. 944007947
REF.245	curva anteriore destro	Comp. 944007946
REF.746	rettilineo fondo	Comp. 944009291
REF.585	Lungo rettilineo laterale	Comp. 944015616
REF.586	Lungo rettilineo laterale	Comp. 944015617
REF.541A	KIT 8 PEZZI	2x234 2x235 2x236 2x237
REF.569	KIT 16 PEZZI	1x234 1x235 1x236 1x237 2x563 2x564 2x565 2x566 2x567 2x568
REF.541C	KIT 24 PEZZI	2x234 2x235 2x263 2x237 2x558 2x559 4x560 4x561 2x244 2x245

Tutti i marchi appartengono ai rispettivi proprietari e il loro utilizzo è solo a scopo informativo.

IVA non inclusa

Controllare Rif. Prima.

WWW.EDUARDOREPUESTOSAGRICOLAS.COM

Trasporto UE gratuito per ordini 500€

PRODUZIONE DEFLETTORI POSTERIORI NUOVI (trasporto escluso)

GUIDA DEL CEPPO
SINISTRA/DESTRA

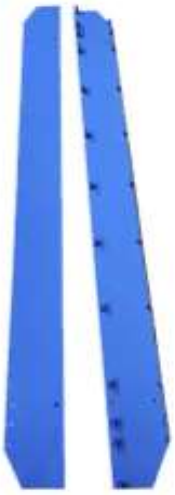

SUOLA

DEFLETTORE POSTERIORE
SINISTRA/DESTRA

DEFLETTORE ANTERIORE
SINISTRA/DESTRA

SB36, SB53, SB55, SB56, SB58, SB60, SB62, SB64, VL5060, VL5080, VL5090, VL530, VL540, VL550, VL570

REF.701A	POSTERIORE DEFLETTORE DESTRA	Comp. 944015273
REF.702A	POSTERIORE DEFLETTORE SINISTRA	Comp. 944015274
REF.703A	KIT POSTERIORE DEFLETTORE DESTRO	Comp. 9965152

9030L, 9040L, 9040M, 9060L, 9060L GE, 9060L H, 9060L SH, 9080L, 9080L GE, 9080L H, 9080L SH, 9090L, 9090L GE, 9090L H, 9090L SH, SB36, SB56, SB58, SB60, SB62, SB64, VL600, VL6040, VL6050, VL6060, VL6070, VL6080, VL6090, VL610, VL620, VL630, VL640, VL660, VM4090, VM460

REF.701C	CEPA GUIDA A DESTRA	Comp. 944011412
REF.702C	CEPA GUIDA A SINISTRA	Comp. 944011411
REF.701D	BASE	Comp. 944005585

7030L, 8030L, 9030L, 9040L, 9050L H, 9050L L, 9050L SH, 9060L, 9060L GE, 9060L H, 9060L SH, 9070L H, 9070L L, 9070L L T5, 9070L SH, 9080L, 9080L GE, 9080L H, 9080L SH, 9090L, 9090L GE, 9090L H, 9090L H T4, 9090L H T5, 9090L SH, 9090L SH T4, 9090L SH T5, 9090L T3

REF.704D	POSTERIORE DEFLETTORE DESTRA	Comp. 84243748
REF.705D	POSTERIORE DEFLETTORE SINISTRA	Comp. 84243747
REF.703A	KIT POSTERIORE DEFLETTORE DESTRO	Comp. 9965152 (84589775)
REF.704C	ANTERIORE DESTRO DEFLECTOR	Comp. 87648911
REF.705C	Deflettore anteriore SINISTRA	Comp. 87648899
REF.705E	KIT (2 deflettore anteriore + 2cepa guide + 2bases)	Comp. 48061238

VL600, VL6040, VL6050, VL6060, VL6070, VL6080, VL6090, VL610, VL620, VL630, VL640, VL660, VM4090, VM460

REF.704A	POSTERIORE DEFLETTORE DESTRA	Comp. 944031305
REF.705A	POSTERIORE DEFLETTORE SINISTRA	Comp. 944031304
REF.706A	KIT POSTERIORE DEFLETTORE DESTRO	Comp. 84126212
REF.704B	ANTERIORE DESTRO DEFLECTOR	Comp. 944031303
REF.705B	Deflettore anteriore SINISTRA	Comp. 944031302
REF.706B	KIT (2 deflettore anteriore + 2cepa guide + 2bases)	Comp. 47384999

SB36, SB56, SB58, SB60, SB62, SB64

REF.701B	ANTERIORE DESTRO DEFLECTOR	Comp. 944006752
REF.702B	Deflettore anteriore SINISTRA	Comp. 944006751
REF.703B	KIT (2 deflettore anteriore + 2cepa guide + 2bases)	Comp. 84354860

SB33, SB35, SB53, SB55, VL5060, VL5080, VL5090

REF.701BB	ANTERIORE DESTRO DEFLECTOR	Comp. 944012193
REF.702BB	Deflettore anteriore SINISTRA	Comp. 944012194
REF.703BB	KIT (2 deflettore anteriore + 2cepa guide + 2bases)	Comp. 84589810

SB65, VX680, VX7090

REF.707A	POSTERIORE DEFLETTORE DESTRA	Comp. 944031759
REF.708A	POSTERIORE DEFLETTORE SINISTRA	Comp. 944031760
REF.709A	KIT POSTERIORE DEFLETTORE DESTRO	Comp. 87629911
REF.707B	ANTERIORE DESTRO DEFLECTOR	Comp. 944033616
REF.708B	Deflettore anteriore SINISTRA	Comp. 944033603
REF.707C	CEPA GUIDA A DESTRA	Comp. 944020671
REF.708C	CEPA GUIDA A SINISTRA	Comp. 944020670
REF.707D	BASE	Comp. 944020654
REF.709B	KIT (2 deflettore anteriore + 2cepa guide + 2bases)	Comp. -

VL5060, VL5080, VL5090, VL530, VL540, VL550, VL570

REF.701G	ANTERIORE DESTRO DEFLECTOR	Comp. 944032672
REF.702E	Deflettore anteriore SINISTRA	Comp. 944032671
REF.701E	GUIDA CEP DROITE	Comp. 944009292
REF.702D	GUIDA CEP GAUCHE	Comp. 944009293
REF.701F	BASE	Comp. 944009296

IVA non inclusa
Trasporto UE gratuito per ordini 500€

Tutti i marchi appartengono ai rispettivi proprietari e il loro utilizzo è solo a scopo informativo.

NEW HOLLAND-BRAUD COMPATIBLE

EDUARDO

9090X O, 9090X O GE, 9090X O GE T3, 9090X O GE T4, 9090X O GE T5, 9090X O H T4, 9090X O T3, 9090X O T4, 9090X O T5, 9090X OP, 9090X OP GE, VX7090

REF.707G	POSTERIORE DEFLETTORE DESTRA	Comp. 87690491
REF.708F	POSTERIORE DEFLETTORE SINISTRA	Comp. 87690490
REF.709D	KIT POSTERIORE DEFLETTORE DESTRO	Comp. 47523030
REF.707H	ANTERIORE DESTRO DEFLECTOR	Comp. 87683713
REF.708G	Deflettore anteriore SINISTRA	Comp. 87683714
REF.707J	CEPA GUIDA A DESTRA	Comp. 87486382
REF.708H	CEPA GUIDA A SINISTRA	Comp. 87486381
REF.707K	BASE A DESTRA	Comp. 87486388
REF.707L	BASE DI SINISTRA	Comp. 87486379

9090X, 9090X GE, 9090X H, 9090X H H

REF.708J	POSTERIORE DEFLETTORE DESTRA	Comp. 84470410
REF.708K	POSTERIORE DEFLETTORE SINISTRA	Comp. 84470411
REF.709E	KIT POSTERIORE DEFLETTORE DESTRO	Comp. 84470644
REF.707N	ANTERIORE DESTRO DEFLECTOR	Comp. 84470376
REF.708D	Deflettore anteriore SINISTRA	Comp. 84470377
REF.707E	CEPA GUIDA A DESTRA	Comp. 84479820
REF.708E	CEPA GUIDA A SINISTRA	Comp. 84479821
REF.707F	BASE	Comp. 944020654
REF.709C	KIT (2 deflettore anteriore + 2cepa guide + 2bases)	Comp. -

VENDITA DI GRASSI SPECIALI

GRASSI DI LITIO

PER INGRASSAGGIO MANUALE - LIVELLO DI FLUIDITÀ "2" (SPESSO)

REF.401D LITKEN EP2 (con additivi EP) (Potere 5kg)

REF.401E LITKEN EP2 (con additivi EP) cartuccia 420m.l.

PER LUBRIFICAZIONE AUTOMATICA - FLUIDI LIVELLO "00" (LIQUIDI)

REF.401F LITKEN EP00 (con additivi EP) (Potere 5kg)

GRASSI ALIMENTARI

PER INGRASSAGGIO MANUALE - LIVELLO DI FLUIDITÀ "2" (SPESSO)

REF.407B ULTRAPLEX FG2 (Potere 5kg)

REF.403D ULTRAPLEX FG2 cartuccia 420m.l

PER LUBRIFICAZIONE AUTOMATICA - FLUIDI LIVELLO "00" (LIQUIDI)

REF.407E ULTRAPLEX FG00 (Potere 5kg)

OLI

REF.512A OLIO MOTORE AMBRA MASTERGOLD
MASTERGOLD HSP 5 l

HSP SAE 15W - 40NH 330 HSP

REF.512B OLIO MOTORE AMBRA MASTERGOLD
MASTERGOLD HSP 20 l

HSP SAE 15W - 40NH 330 HSP

REF.513A OLIO IDRAULICO AMBRA
HYDROSYSTEM 68 20 l

REF.513H OLIO IDRAULICO AMBRA
HYDROSYSTEM 68 5 l

REF.514A ANTIGELO AMBRA AGRIFLU 5L
AGRIFLU MIX 5 l

NH 900B

Controllare Rif. Prima.

Tutti i marchi appartengono ai rispettivi proprietari e il loro utilizzo è solo a scopo informativo.

WWW.EDUARDOREPUESTOSAGRICOLAS.COM

IVA non inclusa

Trasporto UE gratuito per ordini 500€

FILTRI — VL (VL600, VL6040, VL6050, VL6060, VL6070, VL6080, VL6090, VL610, VL620, VL630, VL640, VL660)

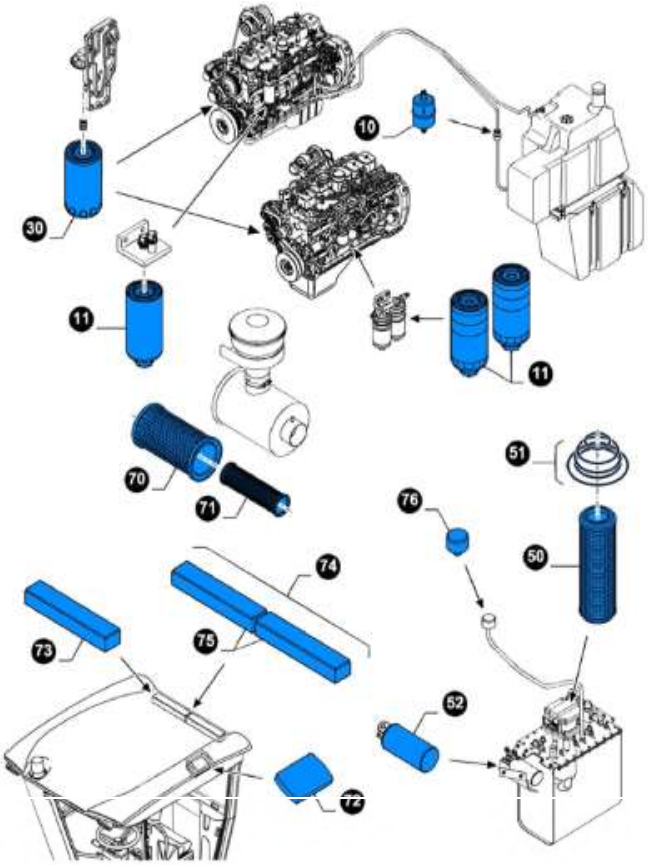

CARBURANTE

REF.515A	10 (10) PRE-FILTRO GASOLIO	Comp. 87400394, D139225
REF.515B	11 (11) F.GASOIL	Comp. 2852693, 87803192
REF.515C	11 (11) F.GASOIL	Comp. 1902138
REF.515D	11 (11) F.GASOIL	Comp. 84209753, 84526251

OLIO

REF.516A	30 (30) F.ENGINE	Comp. 2852526, 87803260
REF.516B	30 (30) F.ENGINE	Comp. 4897898, 84228488

IDRAULICO

REF.599A	50 (50) F.HYDRAULIC	Comp. 9964918
REF.722A	51 (51) BLOCCA	Comp. 87547082
REF.599C	52 (52) F. HYDRAUL. RITORNO	Comp. 9964728

ARIA

REF.597B	70 (70) F. GIUSTO	Comp. 9965158, 87682973
REF.597D	71 (71) F. GIUSTO	Comp. 9965159, 87682972

CABINA

REF.597T	72 (72) F. CABINE	Comp. 84607214
REF.597M	73 (73) F. GIUSTO	Comp. 944028550
REF.597E	74 (74) KIT F. CABINE 2UD	Comp. 713008035
REF.597F	75 (75) F. CABINA DI CARBONIO	Comp. 944032451
REF.597G	76 (76) F. PULL	Comp. 920018819

FILTRI — 9040L, 9060L, 9080L, 9090L, 9090X, 9090X OLIVE

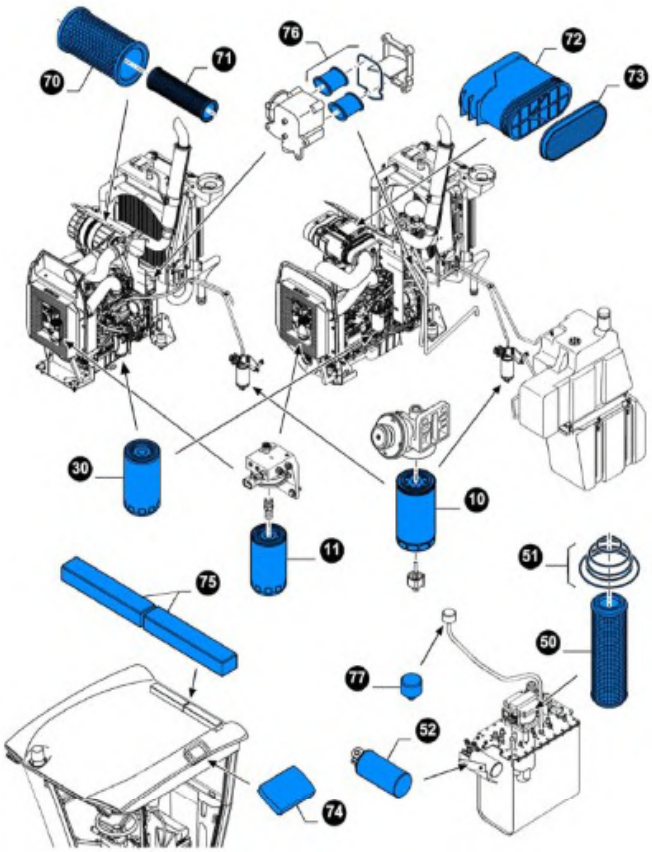

CARBURANTE

REF.515R	10 PRE-FILTRE	Comp. 87533313, 87592170
REF.515S	10 (10) PRE-FILTRE	Comp. 84337371, 84348882
REF.515T	11 (11) F. GASOIL	Comp. 4897897, 73332236

OLIO

REF.516C	30 (30) F. MOTORE	Comp. 4897898, 84228488

IDRAULICO

REF.599A	50 (50) F.HYDRAULIC	Comp. 9964918
REF.722A	51 (51) BLOCCA	Comp. 87547082
REF.599C	52 (52) F. HYDRAUL. RITORNO	Comp. 9964728

ARIA

REF.597P	70 (70) F. GIUSTO	Comp. 87704244
REF.597Q	71 (71) F. GIUSTO	Comp. 87682992

CABINA

REF.597R	72 (72) F. GIUSTO	Comp. 87687267
REF.597S	73 (73) F. GIUSTO	Comp. 87687268
REF.597T	74 (72) F. CABINE	Comp. 84607214
REF.597M	75 (73) F. GIUSTO	Comp. 944028550
REF.597E	75 (74) KIT F. CABINE 2UD	Comp. 713008035
REF.597U	76 (76) FILTRE	Comp. 2992447
REF.597I	77 (77) F. PULL	Comp. 920018819

FILTRI SB (SB56, SB58, SB60, SB64, SB65)

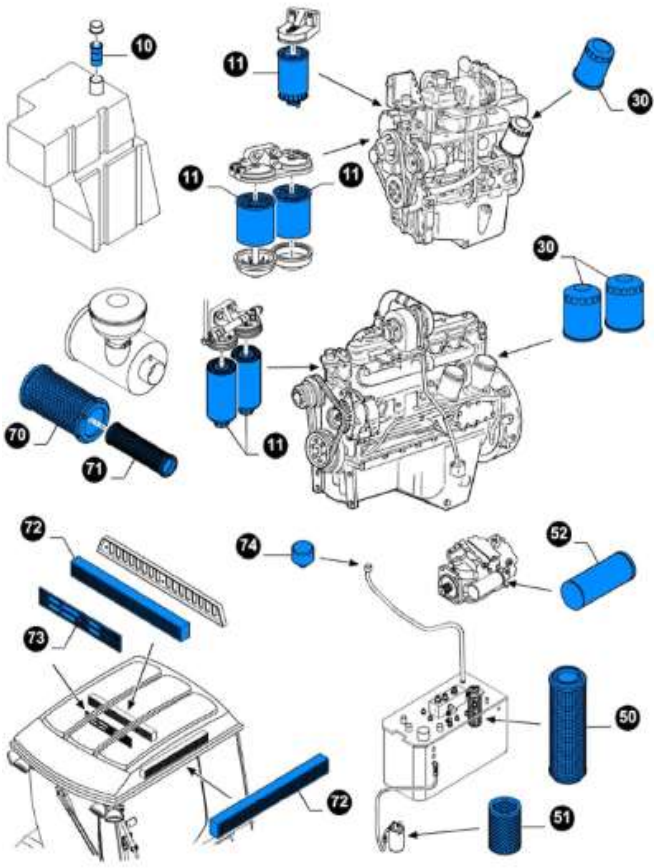

		CARBURANTE	
REF.724A	10	(10) ELEMENTO	Comp. 944010988=47385140
REF.515H	11	(11) F.GASOIL	Comp. 1930010, 471357706, 842214564
REF.515J	11	(11) F.GASOIL	Comp. 1909100
REF.516E	30	(30) F.ENGINE	Comp. 1931047
		OLIO	
REF.516D	30	(30) F.ENGINE	Comp. 1909102, 84221215
REF.516F	30	(30) F.ENGINE	Comp. 87803260, 84228488
		IDRAULICO	
REF.599B	50	(50) F.HYDRAULIC	Comp. 920018520
REF.599C	51	(52) F. HYDRAUL. RITORNO	Comp. 9964728
REF.599D	52	(52) F.HYDRAULIC	Comp. 920018543
REF.599E	52	(52) F.HYDRAULIC	Comp. 920019190
		ARIA	
REF.597B	70	(70) F. GIUSTO	Comp. 9965158, 87682973
REF.597A	70	(70) F. GIUSTO	Comp. 1930784, 87682973
REF.723A	71	(71) GIUSTO	Comp. 1909964
REF.597C	71	(71) F. GIUSTO	Comp. 1930790
REF.597D	71	(71) F. GIUSTO	Comp. 9965159, 87682972
		CABINA	
REF.597J	72	(72) F.CABIN	Comp. 321750750, 47405000
REF.597K	72	(72) F.CABIN CARBON	Comp. 920018705
REF.597L	73	(73) F.CABIN	Comp. 9966191
REF.599H	74	(74) F.PULL	Comp. 700055604, 84078520
REF.597G	74	(76) F. PULL	Comp. 920018819

FILTRI 680

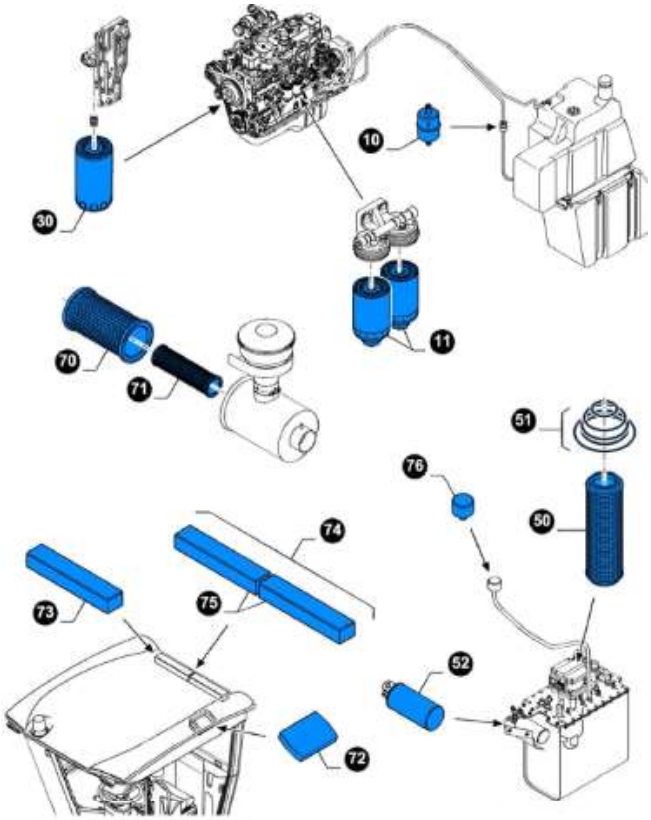

		CARBURANTE	
REF.515A	10	(10) PRE-FILTRO GASOLIO	Comp. 87400394, D139225
REF.515K	11	(11) F.GASOIL	Comp. 1902138
		OLIO	
REF.516G	30	(30) F. MOTORE	Comp. 2852138, 87803260,
		IDRAULICO	
REF.599A	50	(50) F.HYDRAULIC	Comp. 9964918
REF.722A	51	(51) BLOCCA	Comp. 87547082
REF.599C	52	(52) F. HYDRAUL. RITORNO	Comp. 9964728
		ARIA	
REF.597B	70	(70) F. GIUSTO	Comp. 9965158, 87682973
REF.597D	71	(71) F. GIUSTO	Comp. 9965159, 87682972
		CABINA	
REF.597T	72	(72) F. CABINE	Comp. 84607214
REF.597M	72	(73) F. GIUSTO	Comp. 944028550
REF.597E	73	(74) KIT F. CABINE 2UD	Comp. 713008035
REF.597F	74	(75) F. CABINA DI CARBONIO	Comp. 944032451
REF.597G	74	(76) F. PULL	Comp. 920018819

Tutti i marchi appartengono ai rispettivi proprietari e il loro utilizzo è solo a scopo informativo.

Controllare Rif. Prima.

WWW.EDUARDOREPUESTOSAGRICOLAS.COM

IVA non inclusa

Trasporto UE gratuito per ordini 500€

FILTRI 7090

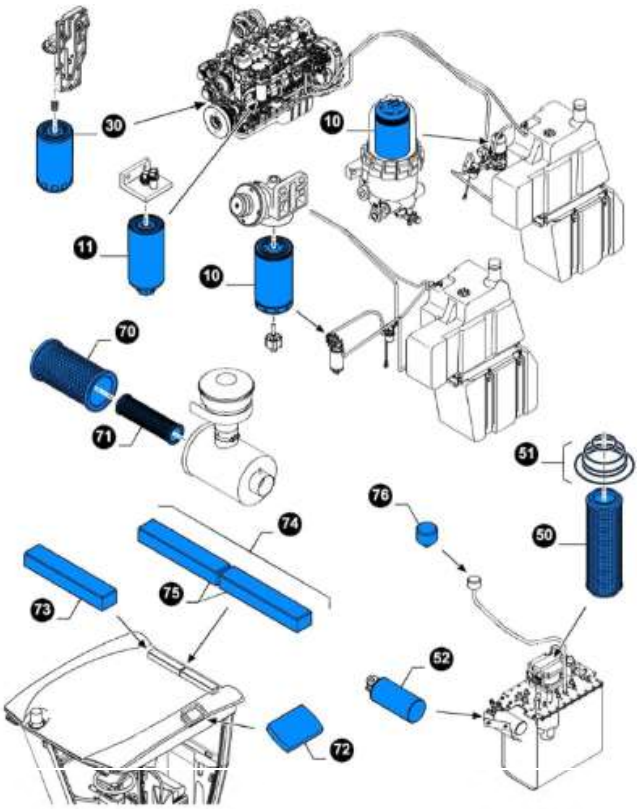

CARBURANTE

REF.515L	10	(10) PRE-FILTRE GASOLIO	Comp. 87519301, 87592171
REF.515M	10	(10) PRE-FILTRE GASOLIO	Comp. 84283691
REF.515N	11	(11) F. GASOIL	Comp. 2852693
REF.515P	11	(11) F. GASOIL	Comp. 2830348
REF.515Q	11	(11) F. GASOIL	Comp. 84209753, 84526251

OLIO

REF.516J	30	(30) F. MOTORE	Comp. 2852526
REF.516B	30	(30) F.ENGINE	Comp. 4897898, 84228488

IDRAULICO

REF.599A	50	(50) F.HYDRAULIC	Comp. 9964918
REF.722A	51	(51) BLOCCA	Comp. 87547082
REF.599C	52	(52) F. HYDRAUL. RITORNO	Comp. 9964728

ARIA

REF.597B	70	(70) F. GIUSTO	Comp. 9965158, 87682973
REF.597D	71	(71) F. GIUSTO	Comp. 9965159, 87682972

CABINA

REF.597T	72	(72) F. CABINE	Comp. 84607214
REF.597M	73	(73) F. GIUSTO	Comp. 944028550
REF.597E	74	(74) KIT F. CABINE 2UD	Comp. 713008035
REF.597F	75	(75) F. CABINA DI CARBONIO	Comp. 944032451
REF.597G	76	(76) F. PULL	Comp. 920018819

FILTRI 7090 OLIVE

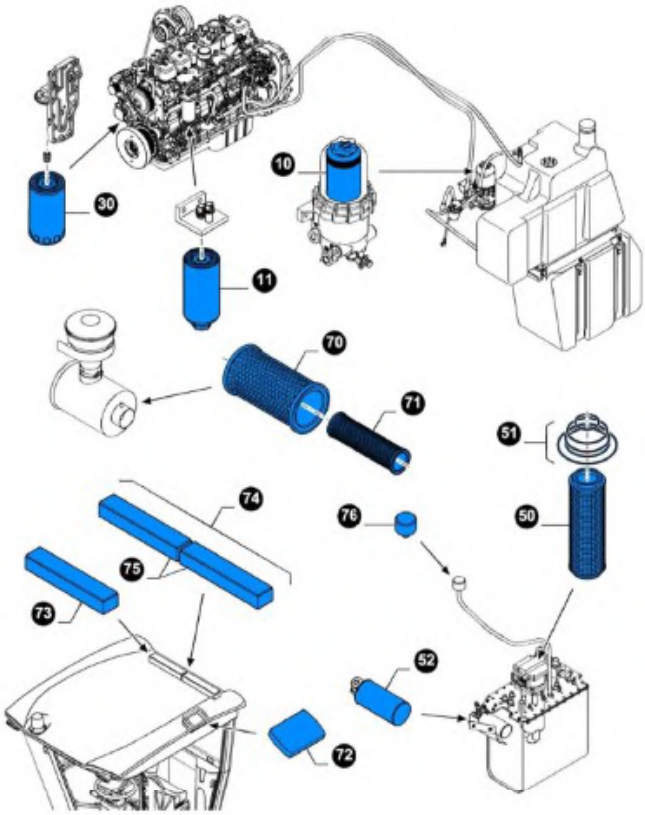

CARBURANTE

REF.515M	10	(10) PRE-FILTRE GASOLIO	Comp. 84283691
REF.515Q	11	(11) F. GASOIL	Comp. 84209753, 84526251

OLIO

REF.516B	30	(30) F.ENGINE	Comp. 4897898, 84228488

IDRAULICO

REF.599A	50	(50) F.HYDRAULIC	Comp. 9964918
REF.722A	51	(51) BLOCCA	Comp. 87547082
REF.599C	52	(52) F. HYDRAUL. RITORNO	Comp. 9964728

ARIA

REF.597B	70	(70) F. GIUSTO	Comp. 9965158, 87682973
REF.597D	71	(71) F. GIUSTO	Comp. 9965159, 87682972
REF.597T	74	(72) F. CABINE	Comp. 84607214
REF.597M	73	(73) F. GIUSTO	Comp. 944028550
REF.597E	74	(74) KIT F. CABINE 2UD	Comp. 713008035
REF.597F	75	(75) F. CABINA DI CARBONIO	Comp. 944032451
REF.597G	76	(76) F. PULL	Comp. 920018819

GREGOIRE COMPATIBLE

EDUARDO

REF.106D

MEDIO stampo. ARC TIE-ROD 1,125 millimetri. D25 GIALLO

Comp. 265675

G MM, G 60, G 60 I, G 70, G 70 A, G 71, G80, G 85, G 86, G 90, G 103, G 104, G 105, G 106, G 107, G 110, G 114, G 115, G 116, G 117, G 135 V, G2.220, G2.230, G4.220, G6.200, G6.210, G7.210, G7.220,

★ REF.106E

NUOVO !

MEDIO stampo. ARC TIE-ROD 1,125 millimetri. D25 NERO

Comp. 265785

G MM, G 60, G 60 I, G 70, G 70 A, G 71, G80, G 85, G 86, G 90, G 103, G 104, G 105, G 106, G 107, G 110, G 114, G 115, G 116, G 117, G 135 V, G2.220, G2.230, G4.220, G6.200, G6.210, G7.210, G7.220,

★ REF.106F

NUOVO !

POCO stampo. ARC TIE-ROD 1.169 millimetri. D25 GIALLO

Comp. 265739

G 3

★ REF.106G

NUOVO !

POCO stampo. ARC TIE-ROD 1.169 millimetri. D25 NERO

Comp. 265796

G 3

REF.107D

LUNGA stampo. ARC TIE-ROD 1330MM D25 GIALLO

Comp. 265617

G MM, G 60, G 60 I, G 70, G 70 A, G 71, G80, G 85, G 86, G 90, G 103, G 104, G 105, G 106, G 107, G 110, G 114, G 115, G 116, G 117, G 135 V, G2.220, G2.230, G4.220, G6.200, G6.210, G7.210, G7.220,

★ REF.107E

NUOVO !

LUNGA stampo. ARC TIE-ROD 1330MM D25 NERO

Comp. 265789

G MM, G 60, G 60 I, G 70, G 70 A, G 71, G80, G 85, G 86, G 90, G 103, G 104, G 105, G 106, G 107, G 110, G 114, G 115, G 116, G 117, G 135 V, G2.220, G2.230, G4.220, G6.200, G6.210, G7.210, G7.220,

REF.108F

POCO GIALLO stampo. ARC TIE-ROD D25 (859x871)

Comp. 265682

G 50, G 50 A, G 55 H, G 55 I, G 55 VH, G 56 I, G.Prima, G1.190, G1.200,

REF.108E

GIALLO formato ARC TIE-ROD D25

Comp. 265020

G 50, G 50 A, G 55 H, G 55 I, G 55 VH, G 56 I, G.Prima, G1.190, G1.200,

REF.113D

ROUND AGITAZIONE ROD LUNGHEZZA D28 1.325 mm

Comp. 265510

G 103, G 104, G 105, G 106, G 107, G 108, G 10X, G 114, G 115, G 117, G 120 SD, G 120SW, G 121, G 122, G 125, G 130, G 132, G 133V, G 135 V, G 13X, G 140SW, G 152, G 167, G 170, G 175V, G 6.200, G 6.210, G 60, G 7.220, G 7.240, G 70, G 71, G 8.260, G 8.270, G 84, G 86, G 9.320, G 91

★ REF.113G

NUOVO !

SHAKER GL GIALLO

Comp. 265843

GL 8, G X 8

★ REF.113L

NUOVO !

SHAKER GL NERO

Comp. 265778

GL 7.4, G M 7.4

REF.104A

OLIVE INFERIORE SHAKER 935 millimetri Ø28

Comp. 265574

9090X, 9090X GE, 9090X GE T3, 9090X GE T4, 9090X GE T5, 9090X H, 9090X H H, 9090X H T4, 9090X O, 9090X O GE, 9090X O GE T3, 9090X O GE T4, 9090X O GE T5, 9090X O H T4, 9090X O T3, 9090X O T4, 9090X O T5, 9090X OP, 9090X OP GE, 9090X T3, 9090X T4, 9090X T5, SB65, VX680, VX7090

★ REF.118C

NUOVO !

ROD hoder HALF CLAMP D35 KIT 2 viti, 2 dadi e 2 rondelle Ø25

Comp. 175011, 175012

G 65, G 66, G 120 SW, G 140 SW, G 167, G 240, G9.320, G9.330, G9.330 Olive, G10.330,

★ REF.118D

NUOVO !

ROD hoder HALF CLAMP D40 KIT 2 viti, 2 dadi e 2 rondelle Ø28

Comp. 175017

G 65, G 66, G 120 SW, G 140 SW, G 167, G 240, G9.320, G9.330, G9.330 Olive, G10.330,

REF.119A

ROD HOLDER SUPPORTO D25 R.H.

Comp. 120462

G MM, G 60, G 60 I, G 70, G 70 A, G 71, G80, G 85, G 86, G 90, G 103, G 104, G 105, G 106, G 107, G 110, G 114, G 115, G 116, G 117, G 135 V, G2.220, G2.230, G4.220, G6.200, G6.210, G7.210, G7.220, G 120, G 121, G 122, G 125, G 130, G 132, G 132 BC, G 151, G 152, G 152 BC, G 152 I, G 160, G 170, G7.240, G8.260, G8.270, G 50, G 50 A, G 55 H, G 55 I, G 55 VH, G 56 I, G.Prima, G1.190, G1.200,

REF.120A

ROD HOLDER SUPPORTO D25 L.H.

Comp. 120463

G MM, G 60, G 60 I, G 70, G 70 A, G 71, G80, G 85, G 86, G 90, G 103, G 104, G 105, G 106, G 107, G 110, G 114, G 115, G 116, G 117, G 135 V, G2.220, G2.230, G4.220, G6.200, G6.210, G7.210, G7.220, G 120, G 121, G 122, G 125, G 130, G 132, G 132 BC, G 151, G 152, G 152 BC, G 152 I, G 160, G 170, G7.240, G8.260, G8.270, G 50, G 50 A, G 55 H, G 55 I, G 55 VH, G 56 I, G.Prima, G1.190, G1.200,

REF.123A

ROD HOLDER SUPPORTO D28 R.H.

Comp. 121461

G 65, G 66, G 120 SW, G 140 SW, G 167, G 240, G9.320, G9.330, G9.330 Olive, G10.330,

REF.124A

ROD HOLDER SUPPORTO D28 L.H.

Comp. 121462

G 65, G 66, G 120 SW, G 140 SW, G 167, G 240, G9.320, G9.330, G9.330 Olive, G10.330,

REF.232B

BAR IN FIBRA CON TUBO INOX. BENT, Olive Grove (lunghezza 100 cm)

Comp. -

REF.233B

FIBRA DI BAR CON TUBO INOX.WITHOUT BEND, Olive Grove (lunghezza 100 cm)

Comp. -

Controllare Rif. Prima.

Tutti i marchi appartengono ai rispettivi proprietari e il loro utilizzo è solo a scopo informativo.

WWW.EDUARDOREPUESTOSAGRICOLAS.COM

IVA non inclusa

Trasporto UE gratuito per ordini 500€

REF.101D

CATCHER VASSOIO R.H. (417x224)

Comp. 155083

G MM, G 60, G 60 I, G 70, G 70 A, G 71, G80, G 85, G 86, G 90, G 103, G 104, G 105, G 106, G 107, G 110, G 114, G 115, G 116, G 117, G 135 V, G2.220, G2.230, G4.220, G6.200, G6.210, G7.210, G7.220, G 120, G 121, G 122, G 125, G 130, G 132, G 132 BC, G 151, G 152, G 152 BC, G 152 I, G 160, G 170, G7.240, G8.260, G8.270, G 50, G 50 A, G 55 H, G 55 I, G 55 VH, G 56 I, G.Prima, G1.190, G1.200,

REF.102D

CATCHER VASSOIO L.H. (417x224)

Comp. 155084

G MM, G 60, G 60 I, G 70, G 70 A, G 71, G80, G 85, G 86, G 90, G 103, G 104, G 105, G 106, G 107, G 110, G 114, G 115, G 116, G 117, G 135 V, G2.220, G2.230, G4.220, G6.200, G6.210, G7.210, G7.220, G 120, G 121, G 122, G 125, G 130, G 132, G 132 BC, G 151, G 152, G 152 BC, G 152 I, G 160, G 170, G7.240, G8.260, G8.270, G 50, G 50 A, G 55 H, G 55 I, G 55 VH, G 56 I, G.Prima, G1.190, G1.200,

REF.103A

COLLETTORE VASSOIO IRRIGIDIMENTO 15 ° - 10 SPESSORE

Comp. 155018

G MM, G 60, G 60 I, G 70, G 70 A, G 71, G80, G 85, G 86, G 90, G 103, G 104, G 105, G 106, G 107, G 110, G 114, G 115, G 116, G 117, G 135 V, G2.220, G2.230, G4.220, G6.200, G6.210, G7.210, G7.220, G 120, G 121, G 122, G 125, G 130, G 132, G 132 BC, G 151, G 152, G 152 BC, G 152 I, G 160, G 170, G7.240, G8.260, G8.270, G 50, G 50 A, G 55 H, G 55 I, G 55 VH, G 56 I, G.Prima, G1.190, G1.200,

REF.155A

COLLETTORE VASSOIO TIGHENING PLATE

Comp. 345533

0 G MM, G 60, G 60 I, G 70, G 70 A, G 71, G80, G 85, G 86, G 90, G 103, G 104, G 105, G 106, G 107, G 110, G 114, G 115, G 116, G 117, G 135 V, G2.220, G2.230, G4.220, G6.200, G6.210, G7.210, G7.220, G 120, G 121, G 122, G 125, G 130, G 132, G 132 BC, G 151, G 152, G 152 BC, G 152 I, G 160, G 170, G7.240, G8.260, G8.270, G 50, G 50 A, G 55 H, G 55 I, G 55 VH, G 56 I, G.Prima, G1.190, G1.200,

★ REF.105A

NUOVO !

CATCHER VASSOIO R.H.

Comp. 155359

G M 74, G L 8, G L 74, GX 8

★ REF.105B

NUOVO !

CATCHER VASSOIO L.H.

Comp. 155360

G M 74, G L 8, G L 74, GX 8

★ REF.105D

NUOVO !

COLLETTORE VASSOIO IRRIGIDIMENTO

Comp. 155018

REF.121A

Vite di fissaggio KW COLLETTORE M8X25 MM

Comp. 60031

G 65, G 66, G 120 SW, G 140 SW, G 167, G 240, G9.320, G9.330, G9.330 Olive, G10.330,

REF.111B

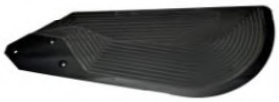

KW CATCHER VASSOIO L.H. (580x263)

Comp. 155128

G 103, G 104, G 105, G 106, G 107, G 108, G 10X, G 114, G 115, G 117, G 120 SD, G 120SW, G 121, G 122, G 125, G 130, G 132, G 133V, G 135 V, G 13X, G 140SW, G 152, G 167, G 170, G 175V, G 6.200, G 6.210, G 60, G 7.220, G 7.240, G 70, G 71, G 8.260, G 8.270, G 84, G 86, G 9.320, G 90

REF.112B

KW CATCHER VASSOIO R.H. (580x263)

Comp. 155127

G 103, G 104, G 105, G 106, G 107, G 108, G 10X, G 114, G 115, G 117, G 120 SD, G 120SW, G 121, G 122, G 125, G 130, G 132, G 133V, G 135 V, G 13X, G 140SW, G 152, G 167, G 170, G 175V, G 6.200, G 6.210, G 60, G 7.220, G 7.240, G 70, G 71, G 8.260, G 8.270, G 84, G 86, G 9.320, G 90

REF.127A*

COLLETTORE VASSOIO IN GOMMA GIUNTO 16X32X76 mm

Comp. 385615

G 65, G 66, G 120 SW, G 140 SW, G 167, G 240, G9.320, G9.330, G9.330 Olive, G10.330,

REF.128A

FLESSIBILE COLLETTORE VASSOIO SUP. RH

Comp. 203073

G 65, G 66, G 120 SW, G 140 SW, G 167, G 240, G9.320, G9.330, G9.330 Olive, G10.330,

REF.128B

FLESSIBILE COLLETTORE VASSOIO SUP. LH

Comp. 203074

G 65, G 66, G 120 SW, G 140 SW, G 167, G 240, G9.320, G9.330, G9.330 Olive, G10.330,

REF.128E

M16

VITE M16 X110 ZN 8,8 testa stretta WHASERS M16 ZN NUTS con Auto Brake

Comp. (65069+388025+65016)

G 65, G 66, G 120 SW, G 140 SW, G 167, G 240, G9.320, G9.330, G9.330 Olive, G10.330,

REF.197A

M8

VITE E DADO M8 X40 (ROD HOLDER- SHAKER)

Comp. 060023, 060003

G MM, G 60, G 60 I, G 70, G 70 A, G 71, G80, G 85, G 86, G 90, G 103, G 104, G 105, G 106, G 107, G 110, G 114, G 115, G 116, G 117, G 135 V, G2.220, G2.230, G4.220, G6.200, G6.210, G7.210, G7.220, G 120, G 121, G 122, G 125, G 130, G 132, G 132 BC, G 151, G 152, G 152 BC, G 152 I, G 160, G 170, G7.240, G8.260, G8.270, G 50, G 50 A, G 55 H, G 55 I, G 55 VH, G 56 I, G.Prima, G1.190, G1.200,

REF.197B

M10

KIT 2 VITI M10x30, 2 dadi e 2 rondelle (titolare stelo a colonna)

Comp. 065393, 065078,

G MM, G 60, G 60 I, G 70, G 70 A, G 71, G80, G 85, G 86, G 90, G 103, G 104, G 105, G 106, G 107, G 110, G 114, G 115, G 116, G 117, G 135 V, G2.220, G2.230, G4.220, G6.200, G6.210, G7.210, G7.220, G 120, G 121, G 122, G 125, G 130, G 132, G 132 BC, G 151, G 152, G 152 BC, G 152 I, G 160, G 170, G7.240, G8.260, G8.270, G 50, G 50 A, G 55 H, G 55 I, G 55 VH, G 56 I, G.Prima, G1.190, G1.200,

REF.197C

M10

KIT 2 VITI 8,8 M10x65, 2 DADI SPECIALI, 2 WHASERS (Portacanna D35 ALLA COLONNA). AI, Ø25

Comp. -

G MM, G 60, G 60 I, G 70, G 70 A, G 71, G80, G 85, G 86, G 90, G 103, G 104, G 105, G 106, G 107, G 110, G 114, G 115, G 116, G 117, G 135 V, G2.220, G2.230, G4.220, G6.200, G6.210, G7.210, G7.220, G 120, G 121, G 122, G 125, G 130, G 132, G 132 BC, G 151, G 152, G 152 BC, G 152 I, G 160, G 170, G7.240, G8.260, G8.270, G 50, G 50 A, G 55 H, G 55 I, G 55 VH, G 56 I, G.Prima, G1.190, G1.200,

REF.197D

M12

KIT: 2 VITI 8,8M12x90, 2 DADI SPECIALI, 2 WHASERS (PORTA D40 ASTA PER COLONNA). AI, Ø28

Comp. -

G MM, G 60, G 60 I, G 70, G 70 A, G 71, G80, G 85, G 86, G 90, G 103, G 104, G 105, G 106, G 107, G 110, G 114, G 115, G 116, G 117, G 135 V, G2.220, G2.230, G4.220, G6.200, G6.210, G7.210, G7.220, G 120, G 121, G 122, G 125, G 130, G 132, G 132 BC, G 151, G 152, G 152 BC, G 152 I, G 160, G 170, G7.240, G8.260,

REF.197E

M10

KIT 2 VITI M10x45, 2 dadi ET (portacanna a colonna) 2 rondelle

Comp. 065276, 065078,

G 65, G 66, G 120 SW, G 140 SW, G 167, G 240, G9.320, G9.330, G9.330 Olive, G10.330,

REF.197F

M8

KIT 2 VITI M8x55 et M8x45, 2 dadi e 2 rondelle

Comp. 065300 (8x45), 066022

G MM, G 60, G 60 I, G 70, G 70 A, G 71, G80, G 85, G 86, G 90, G 103, G 104, G 105, G 106, G 107, G 110, G 114, G 115, G 116, G 117, G 135 V, G2.220, G2.230, G4.220, G6.200, G6.210, G7.210, G7.220, G 120, G 121, G 122, G 125, G 130, G 132, G 132 BC, G 151, G 152, G 152 BC, G 152 I, G 160, G 170, G7.240, G8.260, G8.270, G 50, G 50 A, G 55 H, G 55 I, G 55 VH, G 56 I, G.Prima, G1.190, G1.200,

GREGOIRE COMPATIBLE

EDUARDO

REF.110A

CINTURA 11 metri senza AGRAFE INOX (320 millimetri) SENZA SPEDIZIONE

Comp. -

MINI 3, GMM, G 55 M, G 55 H, G 60, G 60 KW, G 70, G 90, G 104, G 106, G 107, G 108, G 110, G 114, G 115, G 117, G 120, G 122, G 125, G 132 2B, G 132 BC, G 152 2B, G Prima, G1.180, G1.190, G1.200, G2.220, G2.230, G3.220, G3.230, G3.250, G6.200, G6.210, G7.210, G7.220, G7.240, G8.260

REF.110B

CINTURA al metro (320 millimetri) SENZA SPEDIZIONE

Comp. -

GM 420, PMS, 301 BC, MINI 3, GMM, G 55 M, G 55 H, G 60, G 60 KW, G 65, G 66, G 70, G 90, G 104, G 106, G 107, G 108, G 110, G 114, G 115, G 117, G 120, G 120 K, G 120 KW, G 120 SW, G 122, G 125, G 130, G 132 2B, G 132 BC, G 133, G 134, G 140 SW, G 152 2B, G 152 BC, G 152 I, G 160, G 167, G 170, G 240 , G Prima, G1.180, G1.190, G1.200, G2.220, G2.230, G3.220, G3.230, G3.250, G6.200, G6.210, G7.210, G7.220, G7.240, G8.260

REF.340B

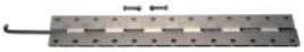

CHIUSURA ASSY. AR INOX L320 con viti

Comp. 24005

PMME, PMM 85, PMM 86, G 50 E, G 50 A, G 50 H, G 50 M, G 70 AL, G 70 E, G 71, G 71 E, G 80, G 85, G 86, G 103, G 105, G 135, G4.221

★ REF.340C

NUOVO !

CHIUSURA ASSY. AR INOX L320 con chiodo Cu

Comp. 24005

PMME, PMM 85, PMM 86, G 50 E, G 50 A, G 50 H, G 50 M, G 70 AL, G 70 E, G 71, G 71 E, G 80, G 85, G 86, G 103, G 105, G 135, G4.222

REF.110C*

CINTURA 11 metri senza AGRAFE INOX (240 millimetri) SENZA SPEDIZIONE

Comp. -

PMME, PMM 85, PMM 86, G 50 E, G 50 A, G 50 H, G 50 M, G 70 AL, G 70 E, G 71, G 71 E, G 80, G 85, G 86, G 103, G 105, G 135, G4.220

REF.110D

CINTURA al metro (240 millimetri) SENZA SPEDIZIONE

Comp. -

PMME, PMM 85, PMM 86, G 50 E, G 50 A, G 50 H, G 50 M, G 70 AL, G 70 E, G 71, G 71 E, G 80, G 85, G 86, G 103, G 105, G 135, G4.220

REF.340A

CHIUSURA ASSY. AR INOX L240 con viti

Comp. 24018

PMME, PMM 85, PMM 86, G 50 E, G 50 A, G 50 H, G 50 M, G 70 AL, G 70 E, G 71, G 71 E, G 80, G 85, G 86, G 103, G 105, G 135, G4.220

★ REF.340D

NUOVO !

CHIUSURA ASSY. AR INOX L240 con chiodo Cu

Comp. 24018

PMME, PMM 85, PMM 86, G 50 E, G 50 A, G 50 H, G 50 M, G 70 AL, G 70 E, G 71, G 71 E, G 80, G 85, G 86, G 103, G 105, G 135, G4.223

REF.110E

CINTURA al metro (320 millimetri) (CON 2 laterali PROFILS)OLIVE. SENZA SPEDIZIONE

Comp. -

G 66, G 67, G 120 SW, G 140 SW, G 170,

REF.145A

FASTENER PIN - ACCIAIO D5 L240

Comp. 24019

PMME, PMM 85, PMM 86, G 50 E, G 50 A, G 50 H, G 50 M, G 70 AL, G 70 E, G 71, G 71 E, G 80, G 85, G 86, G 103, G 105, G 135, G4.220

REF.145B

FASTENER PIN - ACCIAIO D5 L320

Comp. 24004

GM 420, PMS, 301 BC, MINI 3, GMM, G 55 M, G 55 H, G 60, G 60 KW, G 65, G 66, G 70, G 90, G 104, G 106, G 107, G 108, G 110, G 114, G 115, G 117, G 120, G 120 K, G 120 KW, G 120 SW, G 122, G 125, G 130, G 132 2B, G 132 BC, G 133, G 134, G 140 SW, G 152 2B, G 152 BC, G 152 I, G 160, G 167, G 170, G 240 , G Prima, G1.180, G1.190, G1.200, G2.220, G2.230, G3.220, G3.230, G3.250, G6.200, G6.210, G7.210, G7.220, G7.240, G8.260

REF.351D

Chiodo di rame con punta (3,9x24 mm)

Comp. -

PMME, PMM, GMM, G 50, G 50 A, G 50 E, G 55 H, G 55 I, G 55 VH, G 56 I, G 60, G 60 I, G 60 KW, G 60 WH, G 65, G 66, G 70, G 70 A, G 71, G 80, G 84, G 85, G 86, G 90, G 103, G 104, G 105, G 106, G 107, G 108, G 110, G 114, G 115, G 116, G 117, G 120, G 120 SW, G 121, G 122, G 125, G 130, G 132, G 132 BC, G 135V, G 140 SW, G 151, G 152, G 152 BC, G 152 I, G 160, G 167, G 170, G 175 V, G 240, G Prima, G1.190, G1.200, G2.220, G2.230, G3.220, G3.230, G3.250, G4.200, G4.210, G4.220, G5.310, G5.320, G6.200, G6.210, G7.200, G7.210, G7.220, G7.240, G8.260, G8.270, G9.320, G9.330, G10.330, G10.380, GL7.4, GL8, GX8, GM7.4

REF.154C

SUPERIORE CLEANER NASTRO TRASPORTATORE 910x360mm + fissaggio

Comp. 285193

G 103, G 104, G 105, G 106, G 107, G 108, G 10X, G 114, G 115, G 117, G 120 SD, G 120SW, G 121, G 122, G 125, G 130, G 132, G 133V, G 135 V, G 13X, G 140SW, G 152, G 167, G 170, G 175V, G 6.200, G 6.210, G 60, G 7.220, G 7.240, G 70, G 71, G 8.260, G 8.270, G 84, G 86, G 9.320, G 90

REF.339R

FIOCCO RS125 in inox (1,2 m)

Comp. -

REF.339S

FIOCCO RS125 in inox (1m) chiodo

Comp. -

REF.351C

Chiodo di rame con punta (2,1x17 mm)

Comp. -

PMME, PMM, GMM, G 50, G 50 A, G 50 E, G 55 H, G 55 I, G 55 VH, G 56 I, G 60, G 60 I, G 60 KW, G 60 WH, G 65, G 66, G 70, G 70 A, G 71, G 80, G 84, G 85, G 86, G 90, G 103, G 104, G 105, G 106, G 107, G 108, G 110, G 114, G 115, G 116, G 117, G 120, G 120 SW, G 121, G 122, G 125, G 130, G 132, G 132 BC, G 135V, G 140 SW, G 151, G 152, G 152 BC, G 152 I, G 160, G 167, G 170, G 175 V, G 240, G Prima, G1.190, G1.200, G2.220, G2.230, G3.220, G3.230, G3.250, G4.200, G4.210, G4.220, G5.310, G5.320, G6.200, G6.210, G7.200, G7.210, G7.220, G7.240, G8.260, G8.270, G9.320, G9.330, G10.330, G10.380, GL7.4, GL8, GX8, GM7.4

REF.154G

NASTRO PER M2, 2 capi, Liscia / Liscia. SPESSORE 3.2 MM. (1m x Larghezza 450

Comp. -

PMME, PMM, GMM, G 50, G 50 A, G 50 E, G 55 H, G 55 I, G 55 VH, G 56 I, G 60, G 60 I, G 60 KW, G 60 WH, G 65, G 66, G 70, G 70 A, G 71, G 80, G 84, G 85, G 86, G 90, G 103, G 104, G 105, G 106, G 107, G 108, G 110, G 114, G 115, G 116, G 117, G 120, G 120 SW, G 121, G 122, G 125, G 130, G 132, G 132 BC, G 135V, G 140 SW, G 151, G 152, G 152 BC, G 152 I, G 160, G 167, G 170, G 175 V, G 240, G Prima, G1.190, G1.200, G2.220, G2.230, G3.220, G3.230, G3.250, G4.200, G4.210, G4.220, G5.310, G5.320, G6.200, G6.210, G7.200, G7.210, G7.220, G7.240, G8.260, G8.270, G9.320, G9.330, G10.330, G10.380, GL7.4, GL8, GX8, GM7.4

REF.154H

NASTRO PER M2, 3 veli, Liscia / Liscia. SPESSORE 4,3 MM. (1m x Larghezza 450

Comp. -

PMME, PMM, GMM, G 50, G 50 A, G 50 E, G 55 H, G 55 I, G 55 VH, G 56 I, G 60, G 60 I, G 60 KW, G 60 WH, G 65, G 66, G 70, G 70 A, G 71, G 80, G 84, G 85, G 86, G 90, G 103, G 104, G 105, G 106, G 107, G 108, G 110, G 114, G 115, G 116, G 117, G 120, G 120 SW, G 121, G 122, G 125, G 130, G 132, G 132 BC, G 135V, G 140 SW, G 151, G 152, G 152 BC, G 152 I, G 160, G 167, G 170, G 175 V, G 240, G Prima, G1.190, G1.200, G2.220, G2.230, G3.220, G3.230, G3.250, G4.200, G4.210, G4.220, G5.310,

REF.151A

NASTRO TRASPORTATORE TENUTA TOOL

Comp. 203014

PMME, PMM, GMM, G 50, G 50 A, G 50 E, G 55 H, G 55 I, G 55 VH, G 56 I, G 60, G 60 I, G 60 KW, G 60 WH, G **65, G 66, G 70, G 70 A, G 71, G 80, G 84, G 85, G 86, G 90, G 103, G 104, G 105, G 106, G 107, G 108, G 110, G** 114, G 115, G 116, G 117, G 120, G 120 SW, G 121, G 122, G 125, G 130, G 132, G 132 BC, G 135V, G 140 SW, G 151, G 152, G 152 BC, G 152 I, G 160, G 167, G 170, G 175 V, G 240, G Prima, G1.190, G1.200, G2.220, G2.230, G3.220, G3.230, G3.250, G4.200, G4.210, G4.220, G5.310, G5.320, G6.200, G6.210, G7.200, G7.210, G7.220, G7.240, G8.260, G8.270, G9.320, G9.330, G10.330, G10.380, GL7.4, GL8, GX8, GM7.4

REF.187A

PIASTRA DI SUPPORTO SHAKER

Comp. 385182

Tutti i marchi appartengono ai rispettivi proprietari e il loro utilizzo è solo a scopo informativo.

IVA non inclusa

Controllare Rif. Prima.

WWW.EDUARDOREPUESTOSAGRICOLAS.COM

Trasporto UE gratuito per ordini 500€

REF.180A

Bucket Width 240 mm CINTURA DI OLIVA G140, G120, G9

Comp. 265287

G 65, G 66, G 67, G 120 SW, G 133, G 134, G 140 SW, G 170, G 240, G.8270, G9.320, G9.330 V

REF.180B

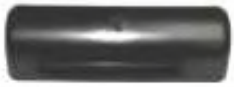

Secchio di 240 mm NASTRO DI 320 MM

Comp. 265279

GM420, PMS, 301 BC, MINI 3, GMM, G 55 M, G 55 H, G 60, G 60 KW, G 70, G 90, G 104, G 106, G 107, G 108, G 110, G 114, G 115, G 117, G 120, G 120 K, G 120 KW, G 122, G 125, G 130, G 132 2B, G 132 BC, G 152 2B, G 152 BC, G 152 I, G 160, G 167, G 170, GPrima, G1.180, G1.190, G1.200, G2.220, G2.230, G3.220,

REF.180D

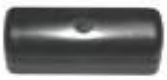

Secchio di 160 millimetri CINTURA DI 240 MM

Comp. 265278

PMME, PMM85, PMM86, G 50 E, G 50 A, G 50 H, G 50 M, G 70 AL, G 70 E, G 71, G 71 E, G 80, G 85, G 86, G 103, G 105, G 135, G4.220

REF.121B

VITE + DADO + RONDELLA M8x30

Comp. -

PMME, PMM, GMM, G 50, G 50 A, G 50 E, G 55 H, G 55 I, G 55 VH, G 56 I, G 60, G 60 I, G 60 KW, G 60 WH, G 65, G 66, G 70, G 70 A, G 71, G 80, G 84, G 85, G 86, G 90, G 103, G 104, G 105, G 106, G 107, G 108, G 110, G 114, G 115, G 116, G 117, G 120, G 120 SW, G 121, G 122, G 125, G 130, G 132, G 132 BC, G 135V, G 140 SW, G 151, G 152, G 152 BC, G 152 I, G 160, G 167, G 170, G 175 V, G 240, G Prima, G1.190, G1.200, G2.220, G2.230, G3.220, G3.230, G3.250, G4.200, G4.210, G4.220, G5.310, G5.320, G6.200, G6.210, G7.200, G7.210, G7.220, G7.240, G8.260, G8.270, G9.320, G9.330, G10.330, G10.380, GL7.4, GL8, GX8, GM7.4

REF.185A

SECCHIELLO FISSAGGIO PIASTRA

Comp. 345594

GM420, PMS, 301 BC, MINI 3, GMM, G 55 M, G 55 H, G 60, G 60 KW, G 70, G 90, G 104, G 106, G 107, G 108, G 110, G 114, G 115, G 117, G 120, G 120 K, G 120 KW, G 122, G 125, G 130, G 132 2B, G 132 BC, G 152 2B, G 152 BC, G 152 I, G 160, G 167, G 170, GPrima, G1.180, G1.190, G1.200, G2.220, G2.230, G3.220, G3.230, G3.250, G6.200, G6.210, G7.210, G7.220, G7.240, G8.260, G8.270,

REF.185B

SECCHIELLO FISSAGGIO PIASTRA

Comp. 346272

G 65, G 66, G 67, G 120 SW, G 133, G 134, G 140 SW, G 170, G 240, G.8270, G9.320, G9.330 V, PMME, PMM85, PMM86, G 50 E, G 50 A, G 50 H, G 50 M, G 70 AL, G 70 E, G 71, G 71 E, G 80, G 85, G 86, G 103, G 105, G 135, G4.220

REF.153C

INFERIORE DESTRO ANTERIORE FLAP, 3 veli- 4,2mm BLU

Comp. 285005

PMME, PMM, GMM, G 50, G 50 A, G 50 E, G 55 H, G 55 I, G 55 VH, G 56 I, G 60, G 60 I, G 60 KW, G 60 WH, G 65, G 66, G 70, G 70 A, G 71, G 80, G 84, G 85, G 86, G 90, G 103, G 104, G 105, G 106, G 107, G 108, G 110, G 114, G 115, G 116, G 117, G 120, G 120 SW, G 121, G 122, G 125, G 130, G 132, G 132 BC, G 135V, G 140 SW, G 151, G 152, G 152 BC, G 152 I, G 160, G 167, G 170, G 175 V, G 240, G Prima, G1.190, G1.200, G2.220, G2.230, G3.220, G3.230, G3.250, G4.200, G4.210, G4.220, G5.310, G5.320, G6.200, G6.210, G7.200, G7.210, G7.220, G7.240, G8.260, G8.270, G9.320, G9.330, G10.330, G10.380, GL7.4, GL8, GX8, GM7.4

REF.153D

SINISTRA INFERIORE ANTERIORE FLAP, 3 veli- 4,2mm BLU

Comp. 285006

PMME, PMM, GMM, G 50, G 50 A, G 50 E, G 55 H, G 55 I, G 55 VH, G 56 I, G 60, G 60 I, G 60 KW, G 60 WH, G 65, G 66, G 70, G 70 A, G 71, G 80, G 84, G 85, G 86, G 90, G 103, G 104, G 105, G 106, G 107, G 108, G 110, G 114, G 115, G 116, G 117, G 120, G 120 SW, G 121, G 122, G 125, G 130, G 132, G 132 BC, G 135V, G 140 SW, G 151, G 152, G 152 BC, G 152 I, G 160, G 167, G 170, G 175 V, G 240, G Prima, G1.190, G1.200, G2.220, G2.230, G3.220, G3.230, G3.250, G4.200, G4.210, G4.220, G5.310, G5.320, G6.200, G6.210, G7.200, G7.210, G7.220, G7.240, G8.260, G8.270, G9.320, G9.330, G10.330, G10.380, GL7.4, GL8, GX8, GM7.4

REF.153E

INFERIORE DESTRO ANTERIORE FLAP, 3 veli- 4,2mm VERDE

Comp. 285005

PMME, PMM, GMM, G 50, G 50 A, G 50 E, G 55 H, G 55 I, G 55 VH, G 56 I, G 60, G 60 I, G 60 KW, G 60 WH, G 65, G 66, G 70, G 70 A, G 71, G 80, G 84, G 85, G 86, G 90, G 103, G 104, G 105, G 106, G 107, G 108, G 110, G 114, G 115, G 116, G 117, G 120, G 120 SW, G 121, G 122, G 125, G 130, G 132, G 132 BC, G 135V, G 140 SW, G 151, G 152, G 152 BC, G 152 I, G 160, G 167, G 170, G 175 V, G 240, G Prima, G1.190, G1.200, G2.220, G2.230, G3.220, G3.230, G3.250, G4.200, G4.210, G4.220, G5.310, G5.320, G6.200, G6.210, G7.200, G7.210, G7.220, G7.240, G8.260, G8.270, G9.320, G9.330, G10.330, G10.380, GL7.4, GL8, GX8, GM7.4

REF.153F

SINISTRA INFERIORE ANTERIORE FLAP, 3 veli- 4,2mm VERDE

Comp. 285006

PMME, PMM, GMM, G 50, G 50 A, G 50 E, G 55 H, G 55 I, G 55 VH, G 56 I, G 60, G 60 I, G 60 KW, G 60 WH, G 65, G 66, G 70, G 70 A, G 71, G 80, G 84, G 85, G 86, G 90, G 103, G 104, G 105, G 106, G 107, G 108, G 110, G 114, G 115, G 116, G 117, G 120, G 120 SW, G 121, G 122, G 125, G 130, G 132, G 132 BC, G 135V, G 140 SW, G 151, G 152, G 152 BC, G 152 I, G 160, G 167, G 170, G 175 V, G 240, G Prima, G1.190, G1.200, G2.220, G2.230, G3.220, G3.230, G3.250, G4.200, G4.210, G4.220, G5.310, G5.320, G6.200, G6.210, G7.200, G7.210, G7.220, G7.240, G8.260, G8.270, G9.320, G9.330, G10.330, G10.380, GL7.4, GL8, GX8, GM7.4

REF.153G

POSTERIORE FLAP 320X400mm

Comp. 285012

PMME, PMM, GMM, G 50, G 50 A, G 50 E, G 55 H, G 55 I, G 55 VH, G 56 I, G 60, G 60 I, G 60 KW, G 60 WH, G 65, G 66, G 70, G 70 A, G 71, G 80, G 84, G 85, G 86, G 90, G 103, G 104, G 105, G 106, G 107, G 108, G 110, G 114, G 115, G 116, G 117, G 120, G 120 SW, G 121, G 122, G 125, G 130, G 132, G 132 BC, G 135V, G 140 SW, G 151, G 152, G 152 BC, G 152 I, G 160, G 167, G 170, G 175 V, G 240, G Prima, G1.190, G1.200, G2.220, G2.230, G3.220, G3.230, G3.250, G4.200, G4.210, G4.220, G5.310, G5.320, G6.200, G6.210, G7.200, G7.210, G7.220, G7.240, G8.260, G8.270, G9.320, G9.330, G10.330, G10.380, GL7.4, GL8, GX8, GM7.4

REF.182A

COLLETTORE pieghevole del vassoio parentesi destra PER TESXGRE

Comp. 325004

G 103, G 104, G 105, G 106, G 107, G 108, G 10X, G 114, G 115, G 117, G 120 SD, G 120SW, G 121, G 122, G 125, G 130, G 132, G 133V, G 135 V, G 13X, G 140SW, G 152, G 167, G 170, G 175V, G 6.200, G 6.210, G 60, G 7.220, G 7.240, G 70, G 71, G 8.260, G 8.270, G 84, G 86, G 9.320, G 90

REF.182B

COLLETTORE pieghevole del vassoio parentesi sinistra PER TESXGRE

Comp. 325005

G 103, G 104, G 105, G 106, G 107, G 108, G 10X, G 114, G 115, G 117, G 120 SD, G 120SW, G 121, G 122, G 125, G 130, G 132, G 133V, G 135 V, G 13X, G 140SW, G 152, G 167, G 170, G 175V, G 6.200, G 6.210, G 60, G 7.220, G 7.240, G 70, G 71, G 8.260, G 8.270, G 84, G 86, G 9.320, G 90

REF.184A

ANTERIORE CATCHER pieghevole del vassoio SUPPORTO R.H.

Comp. 345007

PMME, PMM, GMM, G 50, G 50 A, G 50 E, G 55 H, G 55 I, G 55 VH, G 56 I, G 60, G 60 I, G 60 KW, G 60 WH, G 65, G 66, G 70, G 70 A, G 71, G 80, G 84, G 85, G 86, G 90, G 103, G 104, G 105, G 106, G 107, G 108, G 110, G 114, G 115, G 116, G 117, G 120, G 120 SW, G 121, G 122, G 125, G 130, G 132, G 132 BC, G 135V, G 140 SW, G 151, G 152, G 152 BC, G 152 I, G 160, G 167, G 170, G 175 V, G 240, G Prima, G1.190, G1.200, G2.220, G2.230, G3.220, G3.230, G3.250, G4.200, G4.210, G4.220, G5.310, G5.320, G6.200, G6.210, G7.200, G7.210, G7.220, G7.240, G8.260, G8.270, G9.320, G9.330, G10.330, G10.380, GL7.4, GL8, GX8, GM7.4

REF.184B

ANTERIORE CATCHER pieghevole del vassoio SUPPORTO L.H.

Comp. 345008

PMME, PMM, GMM, G 50, G 50 A, G 50 E, G 55 H, G 55 I, G 55 VH, G 56 I, G 60, G 60 I, G 60 KW, G 60 WH, G 65, G 66, G 70, G 70 A, G 71, G 80, G 84, G 85, G 86, G 90, G 103, G 104, G 105, G 106, G 107, G 108, G 110, G 114, G 115, G 116, G 117, G 120, G 120 SW, G 121, G 122, G 125, G 130, G 132, G 132 BC, G 135V, G 140 SW, G 151, G 152, G 152 BC, G 152 I, G 160, G 167, G 170, G 175 V, G 240, G Prima, G1.190, G1.200, G2.220, G2.230, G3.220, G3.230, G3.250, G4.200, G4.210, G4.220, G5.310, G5.320, G6.200, G6.210, G7.200, G7.210, G7.220, G7.240, G8.260, G8.270, G9.320, G9.330, G10.330, G10.380, GL7.4, GL8, GX8, GM7.4

REF.184C

INFERIORE PLACCA FRONTALE (ACCIAIO)

Comp. 345009

PMME, PMM, GMM, G 50, G 50 A, G 50 E, G 55 H, G 55 I, G 55 VH, G 56 I, G 60, G 60 I, G 60 KW, G 60 WH, G 65, G 66, G 70, G 70 A, G 71, G 80, G 84, G 85, G 86, G 90, G 103, G 104, G 105, G 106, G 107, G 108, G 110, G 114, G 115, G 116, G 117, G 120, G 120 SW, G 121, G 122, G 125, G 130, G 132, G 132 BC, G 135V, G 140 SW, G 151, G 152, G 152 BC, G 152 I, G 160, G 167, G 170, G 175 V, G 240, G Prima, G1.190, G1.200, G2.220, G2.230, G3.220, G3.230, G3.250, G4.200, G4.210, G4.220, G5.310, G5.320, G6.200, G6.210, G7.200, G7.210, G7.220, G7.240, G8.260, G8.270, G9.320, G9.330, G10.330, G10.380, GL7.4, GL8, GX8, GM7.4

REF.134B

GIUNTO (LATO MOTORE) + Accoppiamento (ROTOR LATERALE)

Comp. 388602

REF.135A

ATTACCO ANELLO

Comp. 05043

REF.135B

RED ATTACCO ANELLO. NUOVA VERSIONE

Comp. 05239

REF.148A

Montaggio flessibile 40x28xM10 supporto infinito

Comp. 025005

GREGOIRE COMPATIBLE

EDUARDO

REF.109A

PULEGGIA RASCHIETTO 70X30X8,2mm

Comp. 265005

G 50, G 50 A, G 55 H, G 55 I, G 55 VH, G 56 I, G.Prima, G1.190, G1.200,

REF.117A

POSTERIORE PULEGGIA 185 mm con Ø 20 mm Albero

Comp. 120403

G 86, G 103, G 104, G 105, G 106, G 107, G 108, G 10X, G 114, G 115, G 117, G 120 SD, G 120SW, G 121, G 122, G 125, G 130, G 132, G 133V, G 135 V, G 13X, G 140SW, G 152, G 167, G 170, G 175V, G 6.200, G 6.210, G 60, G 7.220, G 7.240, G 70, G 71, G 8.260, G 8.270, G 84, G 86, G 9.320, G 90

REF.117B

Puleggia anteriore 145 mm con Ø 20 mm Albero

Comp. 120404

G 7.240, G 70, G 8.260, G 86, G 103, G 104, G 105, G 106, G 107, G 108, G 10X, G 114, G 115, G 117, G 120 SD, G 120SW, G 121, G 122, G 125, G 130, G 132, G 133V, G 135 V, G 13X, G 140SW, G 152, G 167, G 170,

REF.117D

PULEGGIA 145 MM, Ø 30mm

Comp. 120663

G 103, G 104, G 105, G 106, G 107, G 108, G 10X, G 114, G 115, G 117, G 120 SD, G 120SW, G 121, G 122, G 125, G 130, G 132, G 133V, G 135 V, G 13X, G 140SW, G 152, G 167, G 170, G 175V, G 6.200, G 6.210, G 60, G 7.220, G 7.240, G 70, G 71, G 8.260, G 8.270, G 84, G 86, G 9.320, G 90

REF.117E

Puleggia superiore TAPE

Comp. 386508

G 103, G 104, G 105, G 106, G 107, G 108, G 10X, G 114, G 115, G 117, G 120 SD, G 120SW, G 121, G 122, G 125, G 130, G 132, G 133V, G 135 V, G 13X, G 140SW, G 152, G 167, G 170, G 175V, G 6.200, G 6.210, G 60, G 7.220, G 7.240, G 70, G 71, G 8.260, G 8.270, G 84, G 86, G 9.320, G 90

REF.117F

PULEGGIA 145 MM con sensore cava, ø 20 mm

Comp. 124670

REF.117G

PULEGGIA 185 MM, Ø 25 millimetri

Comp. 502818

REF.117H

PULEGGIA 185 MM, Ø 30mm

Comp. 120662

G 103, G 104, G 105, G 106, G 107, G 108, G 10X, G 114, G 115, G 117, G 120 SD, G 120SW, G 121, G 122, G 125, G 130, G 132, G 133V, G 135 V, G 13X, G 140SW, G 152, G 167, G 170, G 175V, G 6.200, G 6.210, G 60, G 7.220, G 7.240, G 70, G 71, G 8.260, G 8.270, G 84, G 86, G 9.320, G 90

REF.117J

PULEGGIA 145 MM, Ø 25 millimetri G8

Comp. 385289

REF.117K

PULEGGIA 145 MM, Ø 30 mm G9

Comp. 385414

REF.126A

PULEGGIA MGT 300 + TAPER BLOCCO 25

Comp. 280017 (280028+230006)

G 103, G 104, G 105, G 106, G 107, G 108, G 10X, G 114, G 115, G 117, G 120 SD, G 120SW, G 121, G 122, G 125, G 130, G 132, G 133V, G 135 V, G 13X, G 140SW, G 152, G 167, G 170, G 175V, G 6.200, G 6.210, G 60, G 7.220, G 7.240, G 70, G 71, G 8.260, G 8.270, G 84, G 86, G 9.320, G 90

REF.126B

PULEGGIA MGT 400 + TAPER BLOCCO 30

Comp. 280018 (280031+230010)

G 103, G 104, G 105, G 106, G 107, G 108, G 10X, G 114, G 115, G 117, G 120 SD, G 120SW, G 121, G 122, G 125, G 130, G 132, G 133V, G 135 V, G 13X, G 140SW, G 152, G 167, G 170, G 175V, G 6.200, G 6.210, G 60, G 7.220, G 7.240, G 70, G 71, G 8.260, G 8.270, G 84, G 86, G 9.320, G 90

REF.177A

TENUTA A LABBRO PER CUSCINETTO PULEGGIA Ø 20 mm (25x42x8)

Comp. 185025

G 103, G 104, G 105, G 106, G 107, G 108, G 10X, G 114, G 115, G 117, G 120 SD, G 120SW, G 121, G 122, G 125, G 130, G 132, G 133V, G 135 V, G 13X, G 140SW, G 152, G 167, G 170, G 175V, G 6.200, G 6.210, G 60, G 7.220, G 7.240, G 70, G 71, G 8.260, G 8.270, G 84, G 86, G 9.320, G 90

REF.177E

TENUTA A LABBRO PER CUSCINETTO PULEGGIA Ø 25 mm (28x52x7)

Comp. 185923

REF.177C

TENUTA A LABBRO PER CUSCINETTO PULEGGIA Ø 30 mm (38x55x10)

Comp. 185034

REF.183G

Cuscinetto a sfere (una riga) 20X42X12 PULEGGIA Ø 20

Comp. 330250,330008

REF.183H

Cuscinetto a sfere (una riga) 25X52X15 PULEGGIA Ø 25

Comp. 330251,330053

REF.183I

Cuscinetto a sfere (una riga) 30X55X13 PULEGGIA Ø 30

Comp. 330009

REF.168A

PULEGGIA CUSCINETTO

Comp. 120402

G 103, G 104, G 105, G 106, G 107, G 108, G 10X, G 114, G 115, G 117, G 120 SD, G 120SW, G 121, G 122, G 125, G 130, G 132, G 133V, G 135 V, G 13X, G 140SW, G 152, G 167, G 170, G 175V, G 6.200, G 6.210, G 60, G 7.220, G 7.240, G 70, G 71, G 8.260, G 8.270, G 84, G 86, G 9.320, G 90

REF.168B

SUPPORTO CUSCINETTO INFERIORE

Comp. 120459

G 103, G 104, G 105, G 106, G 107, G 108, G 10X, G 114, G 115, G 117, G 120 SD, G 120SW, G 121, G 122, G 125, G 130, G 132, G 133V, G 135 V, G 13X, G 140SW, G 152, G 167, G 170, G 175V, G 6.200, G 6.210, G 60, G 7.220, G 7.240, G 70, G 71, G 8.260, G 8.270, G 84, G 86, G 9.320, G 90

Tutti i marchi appartengono ai rispettivi proprietari e il loro utilizzo è solo a scopo informativo.

Controllare Rif. Prima.

WWW.EDUARDOREPUESTOSAGRICOLAS.COM

IVA non inclusa

Trasporto UE gratuito per ordini 500€

REF.147A

GOMMA GIUNTO 20X75X50

Comp. 386655

REF.147B

GOMMA GIUNTO 14X30X42

Comp. 025012

REF.147C

GOMMA GIUNTO 24X48X44

Comp. 025015

REF.147E

GOMMA GIUNTO 28X48X66

Comp. 025014

REF.147F

GOMMA GIUNTO ellittica 16X65X60

Comp. 025024

REF.147H*

GOMMA GIUNTO ellittica PMM

Comp. 385199, 561269

PMM

REF.147G

PAC T 24X48X44

Comp. 385087

REF.162B

DOPPIO EXCENTRIC ASSE G115, G60, G152, G122

Comp. 385248

G 60, G 115, G 122, G 152, G6.210

REF.163A

Cuscinetto a sfere EXCENTRIC ASSE 100x150x24

Comp. 330188, 330015

G 60, G 115, G 122, G 152, G6.211

REF.177D

TENUTA A LABBRO PER CUSCINETTO (85X110X18)

Comp. 185045

REF.179A

Boccola per la raccolta TESTA Ø 38 MM

Comp. 265265

G 103, G 104, G 105, G 106, G 107, G 108, G 10X, G 114, G 115, G 117, G 120 SD, G 120SW, G 121, G 122, G 125, G 130, G 132, G 133V, G 135 V, G 13X, G 140SW, G 152, G 167, G 170, G 175V, G 6.200, G 6.210, G 60, G 7.220, G 7.240, G 70, G 71, G 8.260, G 8.270, G 84, G 86, G 9.320, G 90

REF.181A

COMPRESSIONE MOLLA PER NASTRO TRASPORTATORE PULEGGE

Comp. 325001

G 103, G 104, G 105, G 106, G 107, G 108, G 10X, G 114, G 115, G 117, G 120 SD, G 120SW, G 121, G 122, G 125, G 130, G 132, G 133V, G 135 V, G 13X, G 140SW, G 152, G 167, G 170, G 175V, G 6.200, G 6.210, G 60, G 7.220, G 7.240, G 70, G 71, G 8.260, G 8.270, G 84, G 86, G 9.320, G 90

REF.181B*

CINTURE CLEANER COMPRESSIONE molla per

Comp. 325003

G 103, G 104, G 105, G 106, G 107, G 108, G 10X, G 114, G 115, G 117, G 120 SD, G 120SW, G 121, G 122, G 125, G 130, G 132, G 133V, G 135 V, G 13X, G 140SW, G 152, G 167, G 170, G 175V, G 6.200, G 6.210, G 60, G 7.220, G 7.240, G 70, G 71, G 8.260, G 8.270, G 84, G 86, G 9.320, G 90

REF.152C

Cuscinetto ST 20

Comp. 240023, 385098

G 103, G 104, G 105, G 106, G 107, G 108, G 10X, G 114, G 115, G 117, G 120 SD, G 120SW, G 121, G 122, G 125, G 130, G 132, G 133V, G 135 V, G 13X, G 140SW, G 152, G 167, G 170, G 175V, G 6.200, G 6.210, G 60, G 7.220, G 7.240, G 70, G 71, G 8.260, G 8.270, G 84, G 86, G 9.320, G 90

REF.152B

Cuscinetto ST 25

Comp. 385347

G 6.210

REF.152M

Cuscinetto ST 30

Comp. 240040

REF.152D

CUSCINETTO NP25

Comp. 240008

G 103, G 104, G 105, G 106, G 107, G 108, G 10X, G 114, G 115, G 117, G 120 SD, G 120SW, G 121, G 122, G 125, G 130, G 132, G 133V, G 135 V, G 13X, G 140SW, G 152, G 167, G 170, G 175V, G 6.200, G 6.210, G 60, G 7.220, G 7.240, G 70, G 71, G 8.260, G 8.270, G 84, G 86, G 9.320, G 90

REF.152J

CUSCINETTO NP30

Comp. 240009

REF.152H

CUSCINETTO NP35

Comp. 240010

G 103, G 104, G 105, G 106, G 107, G 108, G 10X, G 114, G 115, G 117, G 120 SD, G 120SW, G 121, G 122, G 125, G 130, G 132, G 133V, G 135 V, G 13X, G 140SW, G 152, G 167, G 170, G 175V, G 6.200, G 6.210, G 60, G 7.220, G 7.240, G 70, G 71, G 8.260, G 8.270, G 84, G 86, G 9.320, G 90

REF.152F

CUSCINETTO NP45

Comp. 240038

G 103, G 104, G 105, G 106, G 107, G 108, G 10X, G 114, G 115, G 117, G 120 SD, G 120SW, G 121, G 122, G 125, G 130, G 132, G 133V, G 135 V, G 13X, G 140SW, G 152, G 167, G 170, G 175V, G 6.200, G 6.210, G 60, G 7.220, G 7.240, G 70, G 71, G 8.260, G 8.270, G 84, G 86, G 9.320, G 90

GREGOIRE COMPATIBLE

EDUARDO

REF.152G

Cuscinetto SFT 20

Comp. 240018

G 103, G 104, G 105, G 106, G 107, G 108, G 10X, G 114, G 115, G 117, G 120 SD, G 120SW, G 121, G 122, G 125, G 130, G 132, G 133V, G 135 V, G 13X, G 140SW, G 152, G 167, G 170, G 175V, G 6.200, G 6.210, G 60, G 7.220, G 7.240, G 70, G 71, G 8.260, G 8.270, G 84, G 86, G 9.320, G 90

REF.152A

Cuscinetto SFT 25

Comp. 240019

G 6.210, G 7.240, G 8.260

REF.152K

Cuscinetto SFT 30

Comp. 240020

G 7.240

REF.152L

Cuscinetto SFT 35

Comp. -

REF.152N

Cuscinetto SF 25

Comp. 240014

REF.152P

Cuscinetto SF 30

Comp. 240015

G 8.260

REF.152Q

Cuscinetto SF 35

Comp. 240016

G 86

REF.152E

Cuscinetto SF 45

Comp. 240017

G 103, G 104, G 105, G 106, G 107, G 108, G 10X, G 114, G 115, G 117, G 120 SD, G 120SW, G 121, G 122, G 125, G 130, G 132, G 133V, G 135 V, G 13X, G 140SW, G 152, G 167, G 170, G 175V, G 6.200, G 6.210, G 60, G 7.220, G 7.240, G 70, G 71, G 8.260, G 8.270, G 84, G 86, G 9.320, G 90

REF.157C*

REGOLAZIONE DADO L = 200mm

Comp. 386170

G 175, G.Prima, G 8.270

REF.169C*

Retto Passo CUSTODIA DI REGOLAZIONE

Comp. 122886

G 103, G 104, G 105, G 106, G 107, G 108, G 10X, G 114, G 115, G 117, G 120 SD, G 120SW, G 121, G 122, G 125, G 130, G 132, G 133V, G 135 V, G 13X, G 140SW, G 152, G 167, G 170, G 175V, G 6.200, G 6.210, G 60, G 7.220,

REF.169D*

SINISTRA PITCH CUSTODIA DI REGOLAZIONE

Comp. 122887

G 103, G 104, G 105, G 106, G 107, G 108, G 10X, G 114, G 115, G 117, G 120 SD, G 120SW, G 121, G 122, G 125, G 130, G 132, G 133V, G 135 V, G 13X, G 140SW, G 152, G 167, G 170, G 175V, G 6.200, G 6.210, G 60, G 7.220, G 7.240, G 70, G 71, G 8.260, G 8.270, G 84, G 86, G 9.320, G 90

REF.176A

SENSORE INDUTTIVO CONNETTORE M12 M12

Comp. 168115

G 103, G 104, G 105, G 106, G 107, G 108, G 10X, G 114, G 115, G 117, G 120 SD, G 120SW, G 121, G 122, G 125, G 130, G 132, G 133V, G 135 V, G 13X, G 140SW, G 152, G 167, G 170, G 175V, G 6.200, G 6.210, G 60, G 7.220, G 7.240, G 70, G 71, G 8.260, G 8.270, G 84, G 86, G 9.320, G 90

REF.199A*

ASTA PORTA DI GUIDA LINK

Comp. 120676

G 60, G 152

REF.199C*

ASTA PORTA DI GUIDA LINK L140MM

Comp. 123939

G 132

REF.186A

M28

RACCOLTA-HEAD NUT 28X150 L.H.

Comp. 385017

G 103, G 104, G 105, G 106, G 107, G 108, G 10X, G 114, G 115, G 117, G 120 SD, G 120SW, G 121, G 122, G 125, G 130, G 132, G 133V, G 135 V, G 13X, G 140SW, G 152, G 167, G 170, G 175V, G 6.200, G 6.210, G 60, G 7.220, G 7.240, G 70, G 71, G 8.260, G 8.270, G 84, G 86, G 9.320, G 90

REF.186B

M28

RACCOLTA-HEAD NUT 28X150 R.H.

Comp. 385018

G 103, G 104, G 105, G 106, G 107, G 108, G 10X, G 114, G 115, G 117, G 120 SD, G 120SW, G 121, G 122, G 125, G 130, G 132, G 133V, G 135 V, G 13X, G 140SW, G 152, G 167, G 170, G 175V, G 6.200, G 6.210, G 60, G 7.220, G 7.240, G 70, G 71, G 8.260, G 8.270, G 84, G 86, G 9.320, G 90

REF.189B*

COLLEGAMENTO n°17 TIE-BAR 580mm

Comp. 386007

G 140

REF.172A

M24

SUPPORTI tirante PIN PER M24X200

Comp. 124048

G 103, G 104, G 105, G 106, G 107, G 108, G 10X, G 114, G 115, G 117, G 120 SD, G 120SW, G 121, G 122, G 125, G 130, G 132, G 133V, G 135 V, G 13X, G 140SW, G 152, G 167, G 170, G 175V, G 6.200, G 6.210, G 60, G 7.220, G 7.240, G 70, G 71, G 8.260, G 8.270, G 84, G 86, G 9.320, G 90

REF.172C

M24

SUPPORTI tirante PIN D28 L168 M24X200

Comp. 501684

REF.400A*

VERNICE GIALLA (0,4L SPRAY)

Comp. 245242

Controllare Rif. Prima.

Tutti i marchi appartengono ai rispettivi proprietari e il loro utilizzo è solo a scopo informativo.

WWW.EDUARDOREPUESTOSAGRICOLAS.COM

IVA non inclusa

Trasporto UE gratuito per ordini 500€

GREGOIRE COMPATIBLE

EDUARDO

REF.172L

M24

VITE travi a vista SPECIALE M24X175

Comp. 501684

REF.172M

M24

DADO travi a vista SPECIALE M24

Comp. -

REF.172N

M24

VITE M24X160 ZN

Comp. 65235

REF.172H

M24

DADO CON FRENO M24 ZN

Comp. 65973

REF.172G

M24

WHASER M24 ZN

Comp. 65071

REF.172B

M20

BIELLA BOLT M20X151

Comp. 386118

REF.172J

M20

FALEGNAME TIE-ROD NUT M20X150

Comp. 386120

REF.172K

M20

H NUT M20X150 - ZINC

Comp. 65786

REF.172D

M16

VITE travi a vista M16X130

Comp. 385353

G 103, G 104, G 105, G 106, G 107, G 108, G 10X, G 114, G 115, G 117, G 120 SD, G 120SW, G 121, G 122, G 125, G 130, G 132, G 133V, G 135 V, G 13X, G 140SW, G 152, G 167, G 170, G 175V, G 6.200, G 6.210, G 60, G 7.220, G 7.240, G 70, G 71, G 8.260, G 8.270, G 84, G 86, G 9.320, G 90

REF.172E

M16

DADO travi a vista SPECIALE M16

Comp. 385355

G 103, G 104, G 105, G 106, G 107, G 108, G 10X, G 114, G 115, G 117, G 120 SD, G 120SW, G 121, G 122, G 125, G 130, G 132, G 133V, G 135 V, G 13X, G 140SW, G 152, G 167, G 170, G 175V, G 6.200, G 6.210, G 60, G 7.220, G 7.240, G 70, G 71, G 8.260, G 8.270, G 84, G 86, G 9.320, G 90

REF.172F

M16

NUTS con Auto Brake M16 ZN

Comp. 65016

G 65, G 66, G 120 SW, G 140 SW, G 167, G 240, G9.320, G9.330, G9.330 Olive, G10.330,

REF.160B

M14

FALEGNAME TIE-ROD NUT M14

Comp. 385189

G 103, G 104, G 105, G 106, G 107, G 108, G 10X, G 114, G 115, G 117, G 120 SD, G 120SW, G 121, G 122, G 125, G 130, G 132, G 133V, G 135 V, G 13X, G 140SW, G 152, G 167, G 170, G 175V, G 6.200, G 6.210, G 60, G 7.220, G 7.240, G 70, G 71, G 8.260, G 8.270, G 84, G 86, G 9.320, G 90

REF.160F

M14

DADO M14 - ZINC

Comp. 65015

REF.161B

M14

BIELLA BOLT M14X110

Comp. 386478

REF.169E

FAN GRINDER

Comp. 120451

G 103, G 104, G 105, G 106, G 107, G 108, G 10X, G 114, G 115, G 117, G 120 SD, G 120SW, G 121, G 122, G 125, G 130, G 132, G 133V, G 135 V, G 13X, G 140SW, G 152, G 167, G 170, G 175V, G 6.200, G 6.210, G 60, G 7.220, G 7.240, G 70, G 71, G 8.260, G 8.270, G 84, G 86, G 9.320, G 90

REF.171A

ALBERO MOTORE

Comp. 123437

G 103, G 104, G 105, G 106, G 107, G 108, G 10X, G 114, G 115, G 117, G 120 SD, G 120SW, G 121, G 122, G 125, G 130, G 132, G 133V, G 135 V, G 13X, G 140SW, G 152, G 167, G 170, G 175V, G 6.200, G 6.210, G 60, G 7.220, G 7.240, G 70, G 71, G 8.260, G 8.270, G 84, G 86, G 9.320, G 90

REF.193A*

POSTERIORE LUCE HOUSING

Comp. 165312

REF.193B

DESTRA/SINISTRA iNTERMITTENTE

Comp. 165213, 165214

REF.193D

FARO COMPLETO

Comp. 165216

REF.193E*

GALIBO LUCE

Comp. 166565

G 86

GREGOIRE COMPATIBLE

EDUARDO

REF.188D

PIGNONE 17 denti, 12.7S (1/2), diametro 20mm 8mm chiavetta G60 cintura

Comp. 385251

REF.188E

PIGNONE 17 denti, 12.7S (1/2) diam 25 per G60 cinghia, G152, G8

Comp. 385078

REF.188P

PIGNONE N 17 denti, (3/4) diam 25 per G2, G3

Comp. 386300

REF.188W

PIGNONE 17 denti, (5/8) diam 25, scanalatura 8 millimetri

Comp. 386907

REF.188H

PIGNONE 19 denti, 19.05S (3/4), diam25 per G152 albero eccentrico

Comp. 385217

G 122

REF.188B

PIGNONE 21 denti, 12.7S (1/2) diam 25 Poulley G60, G152, G8, G152 cintura

Comp. 385123

REF.188J

PIGNONE 21 denti, 19.05S (3/4), diam 25 per G8 albero eccentrico

Comp. 385370

REF.188F

PIGNONE 25 denti, 19.05S (3/4), diam 25 per G60 albero eccentrico

Comp. 385233

REF.188L

PIGNONE 25 denti, 12,7S (1/2), diam 25, chiavetta 8 millimetri

Comp. 387182

REF.188Q

Pignone 25 denti, (1/2), diam 25, chiavetta 8 millimetri

Comp. 387183

REF.188C

PIGNONE 30 denti, 12.7S (1/2), diametro 25mm, scanalatura 8 millimetri Poulley G152, G8

Comp. 386550

REF.188K

Pignone 30 denti, (3/4), diam 45, cava 8mm per G8 albero eccentrico

Comp. 250034

REF.188R

PIGNONE 30 denti, (3/8), diam 16mm, chiavetta 5 millimetri

Comp. 385947

REF.188G

PIGNONE 35 denti, 19.05S (3/4), diam 25 per G60 albero eccentrico

Comp. 255009

REF.188A

PIGNONE 38 denti, 12.7S (1/2), diam25, cava 8 millimetri Poulley G60

Comp. 385242

G 103, G 104, G 105, G 106, G 107, G 108, G 10X, G 114, G 115, G 117, G 120 SD, G 120SW, G 121, G 122, G 125, G 130, G 132, G 133V, G 135 V, G 13X, G 140SW, G 152, G 167, G 170, G 175V, G 6.200, G 6.210, G 60, G 7.220, G 7.240, G 70, G 71, G 8.260, G 8.270, G 84, G 86, G 9.320, G 90

REF.188V

PIGNONE 38 denti, (1/2), Diam 25, scanalatura 8 millimetri

Comp. 385242

G 103, G 104, G 105, G 106, G 107, G 108, G 10X, G 114, G 115, G 117, G 120 SD, G 120SW, G 121, G 122, G 125, G 130, G 132, G 133V, G 135 V, G 13X, G 140SW, G 152, G 167, G 170, G 175V, G 6.200, G 6.210, G 60, G 7.220, G 7.240, G 70, G 71, G 8.260, G 8.270, G 84, G 86, G 9.320, G 90

REF.188I

PIGNONE 38 denti, 19.05S (3/4), diam 45, chiavetta 14 millimetri

Comp. 250064

G 122

REF.188U

PIGNONE 38 denti, 19.05S (3/4), Diam 45, chiavetta 8 millimetri

Comp. 385076

REF.190A

BUSCH 28x38x66

Comp. 385997

G 103, G 104, G 105, G 106, G 107, G 108, G 10X, G 114, G 115, G 117, G 120 SD, G 120SW, G 121, G 122, G 125, G 130, G 132, G 133V, G 135 V, G 13X, G 140SW, G 152, G 167, G 170, G 175V, G 6.200, G 6.210, G 60, G 7.220, G 7.240, G 70, G 71, G 8.260, G 8.270, G 84, G 86, G 9.320, G 90

REF.190B

PULEGGIA DI TRAZIONE ALBERO Ø25mm

Comp. 385125

Tutti i marchi appartengono ai rispettivi proprietari e il loro utilizzo è solo a scopo informativo.

Controllare Rif. Prima.

WWW.EDUARDOREPUESTOSAGRICOLAS.COM

IVA non inclusa

Trasporto UE gratuito per ordini 500€

GREGOIRE COMPATIBLE

EDUARDO

REF.191A

CATENA SINGOLA CINGHIA 12.70 1/2" 1m

Comp. 95070

REF.191B

UNIONE CATENA SINGOLA 12.70

Comp. 95071

REF.191C

MEZZA MAGLIA SINGOLA CATENA 12.70

Comp. 95072

REF.198D*

POSTERIORE PULEGGIA GUIDE RIGHT

Comp. 355006

REF.191D

CATENA RINFORZATA 19.05 60H 3/4" SHAKE 1m

Comp. 95056

REF.191E

UNIONE CATENA SINGOLA 19.05

Comp. 95057

REF.191F

MEZZA MAGLIA SINGOLA CATENA 19.05

Comp. 95058

REF.198E*

POSTERIORE galoppino SINISTRA

Comp. 355007

REF.178B

FILTRE CARBURANTE

Comp. 216252

G7.230

REF.178C

FILTRE CARBURANTE

Comp. 170201

G8.260, G7.240, G9.320

REF.178D

PRE-FILTRE GASOLIO

Comp. 216251

G7.230

REF.178E

PRE-FILTRE GASOLIO

Comp. 216177

G8.260, G7.240

REF.178F

FILTRE OLIO

Comp. 216191

G7.230

REF.178G

FILTRE OLIO

Comp. 170199

G8.260, G7.240, G9.320

REF.178H

FILTRE IDRAULICO

Comp. 170203

G7.230, G8.260, 7.240, G9.320

REF.178I

FILTRE IDRAULICO

Comp. 170055

G8.260, G7.240, G9.320

REF.178J

FILTRO ARIA ESTERNO

Comp. 215466, 170120

G7.230, G8.260, G8.320

REF.178K

FILTRO ARIA INTERNO

Comp. 215467, 170121

G7.230, G8.260

REF.178L

FILTRO ARIA ESTERNO

Comp. 170141

G7.230, G8.260, G8.321

REF.178M

FILTRO ARIA INTERNO

Comp. 171140

G7.240, G9.320

PELLENC COMPATIBLE

EDUARDO

REF.307B

AGITAZIONE ROD STD

Comp. 3938602

3045, 3050,3052, 3100,3125, 3140, 3200, 4380, 4390, 4420, 4460, 8390 ...

REF.309B

AGITAZIONE ARM GR / LM 05

Comp. 3938603

3300, 3400, 4050, 4056, 4560, 8590

REF.329B

AGITAZIONE ROD OTTIMALE AUTO-PRESSED

Comp. 8927800/5646845

8290, 8350, 8270, 8370, 8390, 8470, 8490, 8590

REF.308B

SHAKER ARM 80XX 09

Comp. 3971722

8290, 8350, 8270, 8370, 8390, 8470, 8490, 8590, 890, MAV 803, MAV 8050

NUOVO !

REF.367F

AGITAZIONE ROD STD

Comp. 3972836

3045, 3050,3052, 3100,3125, 3140, 3200, 4380, 4390, 4420, 4460, 8390

NUOVO !

REF.367J

AGITAZIONE ROD OTTIMALE

Comp. 125000

Optimum 530, Optimum 550, Optimum 570, Optimum 590, Optimum 750, Optimum 890, 60, XL 60, 8050

REF.367E*

AGITAZIONE ROD GR ORIGINALE

Comp. -

3300, 3400, 4050, 4056, 4560, 8590

REF.331A

AGITAZIONE ASTA SUPERIORE GUIDA

Comp. 3980847

3050,3100,3200,4240,4320,4340,4360,4380,4420,4460,4560,8290,8350,8270,8370,8390,8470,8490,8590, MAV 8030, MAV 8050, MAV 8090

REF.346A*

SUPPORTO PER COLLETTORE VASSOIO, PRE-2006 Modello

Comp. 3932517

3045, 3050,3052, 3100,3125, 3140, 3200, 4380, 4390, 4420, 4460, 8390 ...

REF.336A

FISSAGGIO GIUNTO A PIASTRA 2mm

Comp. 39125455

3050,3100,3200,4240,4320,4340,4360,4380,4420,4460,4560,8290,8350,8270,8370,8390,8470,8490,8590, Optimum 530, Optimum 550, Optimum 570, Optimum 590, Optimum 750, , Optimum 890, MAV 8030, MAV 8050, MAV 8090

REF.301D

RIGHTCATCHER VASSOIO, PRE-2006 Modello

Comp. 3918313

3050,3100,3200,4240,4320,4340,4360,4380,4420,4460,4560,8290,8350,8270,8370,8390,8470,8490,8590, Optimum 530, Optimum 550, Optimum 570, Optimum 590, Optimum 750, , Optimum 890, MAV 8030, MAV 8050, MAV 8090

REF.302D

SINISTRA CATCHER VASSOIO, PRE-2006 Modello

Comp. 3918311

3050,3100,3200,4240,4320,4340,4360,4380,4420,4460,4560,8290,8350,8270,8370,8390,8470,8490,8590, Optimum 530, Optimum 550, Optimum 570, Optimum 590, Optimum 750, , Optimum 890, MAV 8030, MAV 8050, MAV 8090

REF.303D

RIGHTCATCHER VASSOIO POST-206

Comp. 3964866

3050,3100,3200,4240,4320,4340,4360,4380,4420,4460,4560,8290,8350,8270,8370,8390,8470,8490,8590

REF.304D

SINISTRA COLLETTORE VASSOIO POST-206

Comp. 3964868

3050,3100,3200,4240,4320,4340,4360,4380,4420,4460,4560,8290,8350,8270,8370,8390,8470,8490,8590

REF.305D

SINISTRA GOMITO

Comp. 3964865

3050,3100,3200,4240,4320,4340,4360,4380,4420,4460,4560,8290,8350,8270,8370,8390,8470,8490,8590

REF.306D

gomito destro

Comp. 3964864

3050,3100,3200,4240,4320,4340,4360,4380,4420,4460,4560,8290,8350,8270,8370,8390,8470,8490,8590

REF.315D

Gomito sinistro OTTIMALE

Comp. 3911850

Optimum 530, Optimum 550, Optimum 570, Optimum 590, Optimum 750, Optimum 890, MAV 8030, MAV 8050, MAV 8090

REF.316D

Gomito destro OTTIMALE

Comp. 3911851

Optimum 530, Optimum 550, Optimum 570, Optimum 590, Optimum 750, Optimum 890, MAV 8030, MAV 8050, MAV 8090

Controllare Rif. Prima.

Tutti i marchi appartengono ai rispettivi proprietari e il loro utilizzo è solo a scopo informativo.

WWW.EDUARDOREPUESTOSAGRICOLAS.COM

IVA non inclusa

Trasporto UE gratuito per ordini 500€

PELLENC COMPATIBLE

EDUARDO

REF.317D

SINISTRA CATCHER VASSOIO

Comp. 39125435

Optimum 530, Optimum 550, Optimum 570, Optimum 590, Optimum 750, Optimum 890

REF.318D

DESTRA CATCHER VASSOIO

Comp. 39125437

Optimum 530, Optimum 550, Optimum 570, Optimum 590, Optimum 750, Optimum 890

REF.332A

Distanziamento PIASTRA escama OTTIMALE

Comp. 120856

Optimum 530, Optimum 550, Optimum 570, Optimum 590, Optimum 750, Optimum 890, MAV 8030, MAV 8050, MAV 8090

REF.333A*

VITI - INSERT - RONDELLA escama OTTIMALE

Comp. 133642,02913,133636

Optimum 530, Optimum 550, Optimum 570, Optimum 590, Optimum 750, Optimum 890, MAV 8030, MAV 8050, MAV 8090

REF.351A

SCHEDA DESTRA UNIONE GOMITO ottimali per TELAIO

Comp. 111865

Optimum 530, Optimum 550, Optimum 570, Optimum 590, Optimum 750, Optimum 890, MAV 8030, MAV 8050, MAV 8090

REF.351B

TASTO SINISTRO raccordo a gomito ottimale TELAIO

Comp. 111866

Optimum 530, Optimum 550, Optimum 570, Optimum 590, Optimum 750, Optimum 890, MAV 8030, MAV 8050, MAV 8090

REF.379F

GOMITO FIOCCO bianche iniettate

Comp. -

Optimum 530, Optimum 550, Optimum 570, Optimum 590, Optimum 750, Optimum 890, MAV 8030, MAV 8050, MAV 8091

REF.379D

DOPPIO FILETTATA PER INIEZIONE FIOCCHI

Comp. 39134795

Optimum 530, Optimum 550, Optimum 570, Optimum 590, Optimum 750, Optimum 890, MAV 8030, MAV 8050, MAV 8090

☆ REF.378F

NUOVO ! RINFORZATO !

INIEZIONE COLLETTORE VASSOIO, SINISTRA OTTIMALE POTENZIATA

Comp. 131765

Optimum 530, Optimum 550, Optimum 570, Optimum 590, Optimum 750, Optimum 890, MAV 8030, MAV 8050, MAV 8092

☆ REF.379G

NUOVO ! RINFORZATO !

INIEZIONE COLLETTORE VASSOIO, OTTIMALE DESTRA POTENZIATA

Comp. 131766

Optimum 530, Optimum 550, Optimum 570, Optimum 590, Optimum 750, Optimum 890, MAV 8030, MAV 8050, MAV 8092

REF.379E

VITE SENZA TH RIB M8-30 CL8,8 Geome

Comp. 139094

Optimum 530, Optimum 550, Optimum 570, Optimum 590, Optimum 750, Optimum 890, MAV 8030, MAV 8050, MAV 8090

REF.379C

IDRAULICO BLANCHE ESCAPE

Comp. 39137242

Optimum 530, Optimum 550, Optimum 570, Optimum 590, Optimum 750, Optimum 890, MAV 8030, MAV 8050, MAV 8090

REF.310A

AGITAZIONE asta di accoppiamento

Comp. 3937488

3050,3100,3200,4240,4320,4340,4360,4380,4420,4460,4560,8290,8350,8270,8370,8390,8470,8490,8590, Optimum 530, Optimum 550, Optimum 570, Optimum 590, Optimum 750, Optimum 890, MAV 8030, MAV 8050, MAV 8090

REF.311A

ACCIAIO INOX AGITAZIONE asta di accoppiamento PLATE

Comp. 3949603

3050,3100,3200,4240,4320,4340,4360,4380,4420,4460,4560,8290,8350,8270,8370,8390,8470,8490,8590, Optimum 530, Optimum 550, Optimum 570, Optimum 590, Optimum 750, Optimum 890, MAV 8030, MAV 8050, MAV 8090

REF.312A

KIT COMPLETO PER AGITAZIONE ASTA (14X30X42)

Comp. 3967007

3050,3100,3200,4240,4320,4340,4360,4380,4420,4460,4560,8290,8350,8270,8370,8390,8470,8490,8590, Optimum 530, Optimum 550, Optimum 570, Optimum 590, Optimum 750, Optimum 890, MAV 8030, MAV 8050, MAV 8090

REF.313A

KIT PER AGITAZIONE ASTA COMPLETO

Comp. 3938604

3050,3100,3200,4240,4320,4340,4360,4380,4420,4460,4560,8290,8350,8270,8370,8390,8470,8490,8590, Optimum 530, Optimum 550, Optimum 570, Optimum 590, Optimum 750, Optimum 890, MAV 8030, MAV 8050, MAV 8090

REF.314A

KIT 2 VITI M8x40 8.8 + 2 dadi

Comp. -

3050,3100,3200,4240,4320,4340,4360,4380,4420,4460,4560,8290,8350,8270,8370,8390,8470,8490,8590, Optimum 530, Optimum 550, Optimum 570, Optimum 590, Optimum 750, Optimum 890, MAV 8030, MAV 8050, MAV 8090

REF.334A

GOMMA COMUNE scuotitori (14X30X42)

Comp. 3904779

3050,3100,3200,4240,4320,4340,4360,4380,4420,4460,4560,8290,8350,8270,8370,8390,8470,8490,8590, Optimum 530, Optimum 550, Optimum 570, Optimum 590, Optimum 750, Optimum 890, MAV 8030, MAV 8050, MAV 8090

PELLENC COMPATIBLE

EDUARDO

REF.344A

DADO CHIUSO M8 (scuotendo accoppiamento asta)

Comp. -

3050,3100,3200,4240,4320,4340,4360,4380,4420,4460,4560,8290,8350,8270,8370,8390,8470,8490,8590, Optimum 530, Optimum 550, Optimum 570, Optimum 590, Optimum 750, Optimum 890, MAV 8030, MAV 8050, MAV 8090

REF.344B

DADO CHIUSO M12 (Silentblock)

Comp. 3934888

3050,3100,3200,4240,4320,4340,4360,4380,4420,4460,4560,8290,8350,8270,8370,8390,8470,8490,8590, Optimum 530, Optimum 550, Optimum 570, Optimum 590, Optimum 750, Optimum 890, MAV 8030, MAV 8050, MAV 8090

☆ REF.345B NUOVO !

DADO IMPERMEABILE TIPO CLIP M8x5

Comp. 3965078

3045, 3050,3052, 3100,3125, 3140, 3200, 4380, 4390, 4420, 4460, 8390 ...

☆ REF.345C NUOVO !

KIT PER AGITATORI INIETTABILI 2 VITI M8X60 8.8 + 2 DADI M8 + 2 RONDELLE

Comp. -

3045, 3050,3052, 3100,3125, 3140, 3200, 4380, 4390, 4420, 4460, 8390

REF.342C

SENZA SPEDIZIONE

CINGHIA 250 (senza pinzatura) 1m

Comp. -

3050, 3100, 3200, 4240, 4320, 4340, 4360, 4380, 4420, 4460, 4560, 8290, 8350, 8270, 8370, 8390, 8470, 8490, 8592

REF.342H

SENZA SPEDIZIONE

CINGHIA 250 (senza pinzatura) 11m

Comp. -

3050, 3100, 3200, 4240, 4320, 4340, 4360, 4380, 4420, 4460, 4560, 8290, 8350, 8270, 8370, 8390, 8470, 8490, 8597

REF.342D

SENZA SPEDIZIONE

CINGHIA 310 (senza pinzatura) 1m

Comp. -

3050, 3100, 3200, 4240, 4320, 4340, 4360, 4380, 4420, 4460, 4560, 8290, 8350, 8270, 8370, 8390, 8470, 8490, 8593

REF.342I

SENZA SPEDIZIONE

CINGHIA 310 (senza pinzatura) 11m

Comp. -

3050, 3100, 3200, 4240, 4320, 4340, 4360, 4380, 4420, 4460, 4560, 8290, 8350, 8270, 8370, 8390, 8470, 8490, 8598

REF.340F

in acciaio inox di base per 250 mm chiodo Cu

Comp. -

REF.340G

in acciaio inox di base per 310 mm chiodo Cu

Comp. -

REF.145C

CINGHIA GUIDA INOX 250 3 mm di diametro

Comp. -

3050,3100,3200,4240,4320,4340,4360,4380,4420,4460,4560,8290,8350,8270,8370,8390,8470,8490,8590

REF.145D

CINGHIA GUIDA INOX 310 3 mm di diametro

Comp. -

3050,3100,3200,4240,4320,4340,4360,4380,4420,4460,4560,8290,8350,8270,8370,8390,8470,8490,8590

REF.339L

acciaio inox base con chiodo di rame (250 millimetri)

Comp. -

REF.339M

acciaio zincato base con chiodo di rame (320 millimetri)

Comp. -

REF.154G

NASTRO PER M2, 2 capi, Liscia / Liscia. SPESSORE 3.2 MM. (1m x Larghezza 450

Comp. -

PMME, PMM, GMM, G 50, G 50 A, G 50 E, G 55 H, G 55 I, G 55 VH, G 56 I, G 60, G 60 I, G 60 KW, G 60 WH, G 65, G 66, G 70, G 70 A, G 71, G 80, G 84, G 85, G 86, G 90, G 103, G 104, G 105, G 106, G 107, G 108, G 110, G 114, G 115, G 116, G 117, G 120, G 120 SW, G 121, G 122, G 125, G 130, G 132, G 132 BC, G 135V, G 140 SW, G 151, G 152, G 152 BC, G 152 I, G 160, G 167, G 170, G 175 V, G 240, G Prima, G1.190, G1.200, G2.220, G2.230, G3.220, G3.230, G3.250, G4.200, G4.210, G4.220, G5.310, G5.320, G6.200, G6.210, G7.200, G7.210, G7.220,

REF.154H

NASTRO PER M2, 3 veli, Liscia / Liscia. SPESSORE 4,3 MM. (1m x Larghezza 450

Comp. -

PMME, PMM, GMM, G 50, G 50 A, G 50 E, G 55 H, G 55 I, G 55 VH, G 56 I, G 60, G 60 I, G 60 KW, G 60 WH, G 65, G 66, G 70, G 70 A, G 71, G 80, G 84, G 85, G 86, G 90, G 103, G 104, G 105, G 106, G 107, G 108, G 110, G 114, G 115, G 116, G 117, G 120, G 120 SW, G 121, G 122, G 125, G 130, G 132, G 132 BC, G 135V, G 140 SW, G 151, G 152, G 152 BC, G 152 I, G 160, G 167, G 170, G 175 V, G 240, G Prima, G1.190, G1.200, G2.220, G2.230, G3.220, G3.230, G3.250, G4.200, G4.210, G4.220, G5.310, G5.320, G6.200, G6.210, G7.200, G7.210, G7.220,

REF.339P

acciaio inox STAPLE RS125 (250 millimetri)

Comp. -

REF.339Q

acciaio inox STAPLE RS125 (320 millimetri)

Comp. -

REF.351C

Chiodo di rame con punta (2,1x17 mm)

Comp. -

3050, 3100, 3200, 4240, 4320, 4340, 4360, 4380, 4420, 4460, 4560, 8290, 8350, 8270, 8370, 8390, 8470, 8490, 8590

REF.343A

PULEGGIA RASCHIETTO

Comp. 3911290

3050, 3100, 3200, 4240, 4320, 4340, 4360, 4380, 4420, 4460, 4560, 8290, 8350, 8270, 8370, 8390, 8470, 8490, 8590

Controllare Rif. Prima.

Tutti i marchi appartengono ai rispettivi proprietari e il loro utilizzo è solo a scopo informativo.

WWW.EDUARDOREPUESTOSAGRICOLAS.COM

IVA non inclusa

Trasporto UE gratuito per ordini 500€

PELLENC COMPATIBLE

EDUARDO

REF.319A

LOWER rullo liscio 250 millimetri

Comp. 3949620

3045, 3050,3052, 3100,3125, 3140, 3200, 4380, 4390, 4420, 4460, 8390 ...

REF.320A

ABOMBED MOTORE ROLLER 250 millimetri

Comp. 3984573

3045, 3050,3052, 3100,3125, 3140, 3200, 4380, 4390, 4420, 4460, 8390 ...

REF.321A

LOWER rullo liscio 310 millimetri

Comp. 3949616

3300, 3400, 4050, 4056, 4560, 8590

REF.322A

RULLO MOTOR ABOMBED. 310 millimetri

Comp. 3984572

3300, 3400, 4050, 4056, 4560, 8590

REF.888A

Rulliera CUSCINETTO (LONG GRR25)

Comp. 3937508

3050, 3100, 3200, 4240, 4320, 4340, 4360, 4380, 4420, 4460, 4560, 8290, 8350, 8270, 8370, 8390, 8470, 8490, 8590

REF.889A

Reten de rulliera cuscinetto 41,6-25,5-0,5

Comp. 79417, 01161

3050, 3100, 3200, 4240, 4320, 4340, 4360, 4380, 4420, 4460, 4560, 8290, 8350, 8270, 8370, 8390, 8470, 8490, 8590

REF.341A

ACCIAIO INOX PER SECCHIO 250 MM PELLENC CINTURA

Comp. -

3050, 3100, 3200, 4240, 4320, 4340, 4360, 4380, 4420, 4460, 4560, 8290, 8350, 8270, 8370, 8390, 8470, 8490, 8590

REF.341B

ACCIAIO INOX PER SECCHIO 310 MM PELLENC CINTURA

Comp. -

3050, 3100, 3200, 4240, 4320, 4340, 4360, 4380, 4420, 4460, 4560, 8290, 8350, 8270, 8370, 8390, 8470, 8490, 8590

REF.378A*

ANTERIORE AGITAZIONE asta di supporto

Comp. 3916063

3300, 3400, 4050, 4056, 4560, 8590, 3045, 3050,3052, 3100,3125, 3140, 3200, 4380, 4390, 4420, 4460, 8390 ...

REF.378B*

LEGGI AGITAZIONE asta di supporto 2000

Comp. 3916064

3300, 3400, 4050, 4056, 4560, 8590, 3045, 3050,3052, 3100,3125, 3140, 3200, 4380, 4390, 4420, 4460, 8390 ...

REF.378C*

Flangia di fissaggio AGITAZIONE asta di supporto

Comp. 3916065

3300, 3400, 4050, 4056, 4560, 8590, 3045, 3050,3052, 3100,3125, 3140, 3200, 4380, 4390, 4420, 4460, 8390 ...

REF.378E*

FLANGIA-SUPPORTO VITE M12 CL10

Comp. -

Optimum 530, Optimum 550, Optimum 570, Optimum 590, Optimum 750, Optimum 890, MAV 8030, MAV 8050, MAV 8091

REF.335A

PLASTICA rulliera, 78mm COMPLETA

Comp. 3946291

3045, 3050,3052, 3100,3125, 3140, 3200, 4380, 4390, 4420, 4460, 8390 ...

REF.335B

PLASTICA RULLIERA, COMPLETO DIAM 88 millimetri

Comp. 39464816

3300, 3400, 4050, 4056, 4560, 8590

REF.335C

GUIDATA CINTURA RULLI SENZA CUSCINETTI E SENZA ALBERO Ø76

Comp. 3946290

3045, 3050,3052, 3100,3125, 3140, 3200, 4380, 4390, 4420, 4460, 8390 ...

REF.335D

Rulliera 069 / 88

Comp. 3962838

3300, 3400, 4050, 4056, 4560, 8590

REF.355A

TAPE GUIDATA ALBERO ROLLER

Comp. 3942005

3050,3100,3200,4240,4320,4340,4360,4380,4420,4460,4560,8290,8350,8270,8370,8390,8470,8490,8590, Optimum 530, Optimum 550, Optimum 570, Optimum 590, Optimum 750, Optimum 890, MAV 8030, MAV 8050, MAV 8090

REF.353A

NYLON CUSCINETTO Ø30-31

Comp. 3937603, 3966137

Optimum 530, Optimum 550, Optimum 570, Optimum 590, Optimum 750, Optimum 890, MAV 8030, MAV 8050, MAV 8092

REF.354A

SINISTRA DEFLETTORE. TAPE ROLLER GUIDATA

Comp. 3911237

3050,3100,3200,4240,4320,4340,4360,4380,4420,4460,4560,8290,8350,8270,8370,8390,8470,8490,8590, Optimum 530, Optimum 550, Optimum 570, Optimum 590, Optimum 750, Optimum 890, MAV 8030, MAV 8050, MAV 8090

REF.354B

DEFLETTORE DESTRA TAPE GUIDATA ROLLER

Comp. 3911236

3050, 3100, 3200, 4240, 4320, 4340, 4360, 4380, 4420, 4460, 4560, 8290, 8350, 8270, 8370, 8390, 8470, 8490, 8590

PELLENC COMPATIBLE

EDUARDO

REF.358A*

COPPA 130/30 * 2 rullo liscio

Comp. 3911208

3050,3100,3200,4240,4320,4340,4360,4380,4420,4460,4560,8290,8350,8270,8370,8390,8470,8490,8590, Optimum 530, Optimum 550, Optimum 570, Optimum 590, Optimum 750, Optimum 890, MAV 8030, MAV 8050, MAV 8090

REF.359A*

PRINCIPALI PULEGGIA 2005

Comp. 3949615, 3945813

3050,3100,3200,4240,4320,4340,4360,4380,4420,4460,4560,8290,8350,8270,8370,8390,8470,8490,8590, Optimum 530, Optimum 550, Optimum 570, Optimum 590, Optimum 750, Optimum 890, MAV 8030, MAV 8050, MAV 8090

REF.371A*

PALPADOR HAUTEUR GOMME STD

Comp. 3923825

3050, 3100, 3200, 4240, 4320, 4340, 4360, 4380, 4420, 4460, 4560, 8290, 8350, 8270, 8370, 8390, 8470, 8490, 8590

REF.380A*

ORANGE PITTURA (spray 0,4L)

Comp. 1640055

3050,3100,3200,4240,4320,4340,4360,4380,4420,4460,4560,8290,8350,8270,8370,8390,8470,8490,8590, Optimum 530, Optimum 550, Optimum 570, Optimum 590, Optimum 750, Optimum 890, MAV 8030, MAV 8050, MAV 8090

REF.349A

Immediatamente a valle SKATE TDR2-4-5

Comp. 39107147

8290,8350,8270,8370,8390,8470,8490,8590, MAV 8030, MAV 8050, MAV 8090

REF.350A

VERSO L'ALTO TURNO SKATE TDR2-4-5

Comp. 39107148

8290,8350,8270,8370,8390,8470,8490,8590, MAV 8030, MAV 8050, MAV 8090

REF.364A*

SUPPORTO SUP. STD PONTE POSTERIORE E GR SUPERIORE

Comp. 3901106

3050,3100,3200,4240,4320,4340,4360,4380,4420,4460,4560,8290,8350,8270,8370,8390,8470,8490,8590, Optimum 530, Optimum 550, Optimum 570, Optimum 590, Optimum 750, Optimum 890, MAV 8030, MAV 8050, MAV 8090

REF.365A*

SUPPORTO INF. E SUP. ASSALE ANTERIORE STD

Comp. 3901099

3050,3100,3200,4240,4320,4340,4360,4380,4420,4460,4560,8290,8350,8270,8370,8390,8470,8490,8590, Optimum 530, Optimum 550, Optimum 570, Optimum 590, Optimum 750, Optimum 890, MAV 8030, MAV 8050, MAV 8090,96,8

REF.365B*

Cuscinetto inferiore COLONNE alloggiamento posteriore

Comp. 3912544

3050,3100,3200,4240,4320,4340,4360,4380,4420,4460,4560,8290,8350,8270,8370,8390,8470,8490,8590, Optimum 530, Optimum 550, Optimum 570, Optimum 590, Optimum 750, Optimum 890, MAV 8030, MAV 8050, MAV 8090

REF.374A*

SILENTBLOCK D = 100 H = 30 60SH (EXCENTRIC MAV)

Comp. 3916015

3050, 3100, 3200, 4240, 4320, 4340, 4360, 4380, 4420, 4460, 4560, 8290, 8350, 8270, 8370, 8390, 8470, 8490, 8590

REF.374B*

GOMMA GIUNTO 70SH

Comp. 3969847

3050, 3100, 3200, 4240, 4320, 4340, 4360, 4380, 4420, 4460, 4560, 8290, 8350, 8270, 8370, 8390, 8470, 8490, 8590

REF.374C*

ESAGONALE GOMMA GIUNTO H28 M8x20 35SHA

Comp. 3980486

3050, 3100, 3200, 4240, 4320, 4340, 4360, 4380, 4420, 4460, 4560, 8290, 8350, 8270, 8370, 8390, 8470, 8490, 8590

REF.330A

ANTERIORE FLAP PER STD HARVERSTING TESTA

Comp. 3931961

3050,3100,3200,4240,4320,4340,4360,4380,4420,4460,4560,8290,8350,8270,8370,8390,8470,8490,8590

REF.330B

PRECEDENTE OTTIMALE MUD

Comp. -

Optimum 530, Optimum 550, Optimum 570, Optimum 590, Optimum 750, Optimum 890, MAV 8030, MAV 8050, MAV 8090

REF.888B

YAR 207fSUPPORTO INF. E SUP. ASSALE ANTERIORE STD Ø35 YAR 207F

Comp. 3903489

3050, 3100, 3200, 4240, 4320, 4340, 4360, 4380, 4420, 4460, 4560, 8290, 8350, 8270, 8370, 8390, 8470, 8490, 8591

REF.346D*

SUPPORTO PER COLLETTORE VASSOIO, PRE-2006 Modello

Comp. 3937304

3040, 3050, 3052, V600LM-ACTIV 600LM; V600GR-ACTIV 600GR; 600GRE SMART; GR SMART-600GR; SMART-ACTIV550; V600GR-ACTIV 600GR; SMART-ACTIV550

REF.361A*

LAMA SEPARATORE PADDLE STD

Comp. 3920684

3045, 3050,3052, 3100,3125, 3140, 3200, 4380, 4390, 4420, 4460, 8390 ...

REF.361B*

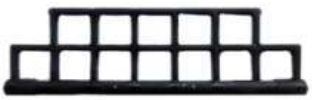

LAMA SEPARATORE PALETTE GR

Comp. 3929339

3300, 3400, 4050, 4056, 4560, 8590

☆ REF.382A NUOVO !

PIASTRA 2mm

Comp. -

3050,3100,3200,4240,4320,4340,4360,4380,4420,4460,4560,8290,8350,8270,8370,8390,8470,8490,8590, Optimum 530, Optimum 550, Optimum 570, Optimum 590, Optimum 750, Optimum 890, MAV 8030, MAV 8050, MAV 8091

☆ REF.382B NUOVO !

PIASTRA 4mm

Comp. -

3050,3100,3200,4240,4320,4340,4360,4380,4420,4460,4560,8290,8350,8270,8370,8390,8470,8490,8590, Optimum 530, Optimum 550, Optimum 570, Optimum 590, Optimum 750, Optimum 890, MAV 8030, MAV 8050, MAV 8092

Tutti i marchi appartengono ai rispettivi proprietari e il loro utilizzo è solo a scopo informativo.

Origine *Burgos*
Destinazione *il mondo*

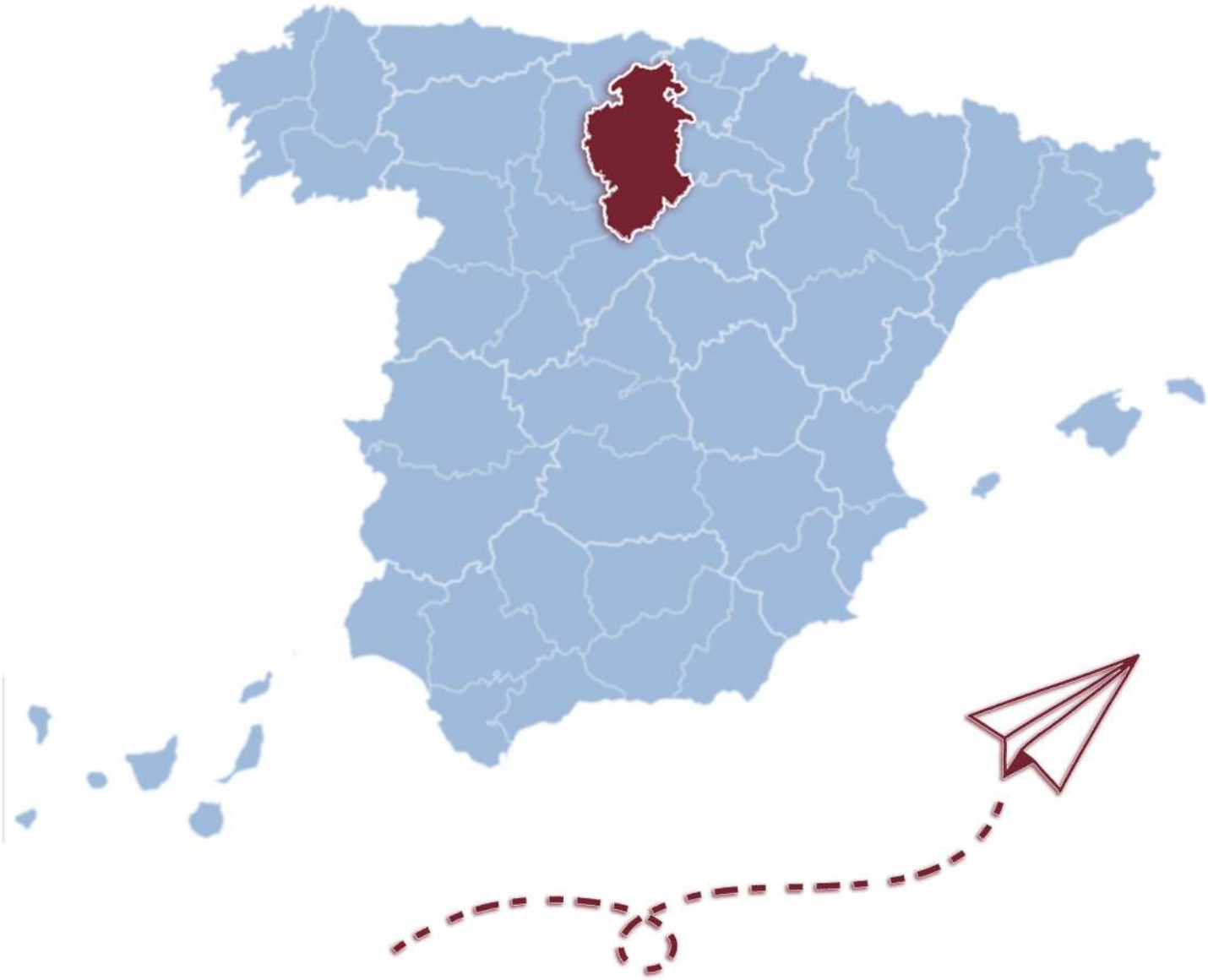

È totalmente vietata la riproduzione totale o parziale di questo catalogo, inclusi testi, disegni e fotografie, nonché la sua conservazione su qualsiasi supporto o la sua trasmissione in qualsiasi forma o con qualsiasi mezzo digitale, meccanico, fotocopiatura, scansione o qualsiasi altro mezzo senza previa autorizzazione e per iscritto.

Le immagini utilizzate sono solo a scopo illustrativo e possono differire dai modelli originali.

Tutti i nomi di prodotti, loghi e marchi sono di proprietà dei rispettivi proprietari. Tutti i nomi di società, prodotti e servizi utilizzati in questo sito Web sono utilizzati solo a scopo di identificazione. L'uso di questi nomi, loghi e marchi non implica alcun tipo di approvazione.

Le informazioni in questo catalogo possono essere modificate senza preavviso.

Copyright © 2022

SPAIN | PORTUGAL | FRANCE | ITALY | SWITZERLAND | GERMANY | HUNGARY | THE NETHERLANDS | LATVIA | FINLAND | MOROCCO | EGYPT | JORDAN | U.S.A | MEXICO | CHILE | ARGENTINA | URUGUAY | SOUTH AFRICA | AUSTRALIA | NEW ZEALAND

EDUARDO REPUESTOS AGRÍCOLAS

MOLDES Y RESINAS, S.L.

Calle López Bravo 24-26, nave 26
Polígono Villalonquéjar
09001 Burgos, España

Tel. +34 606 39 41 29

ot@eduardorepuestosagricolas.com

www.eduardorepuestosagricolas.com