EDUARDO

PEÇAS DE REPOSIÇÃO COMPATÍVEIS PARA MÁQUINAS DE VINDIMAR

10 ANOS
2012-2022
AO SEU LADO

NEW HOLLAND COMPATIBLE

GREGOIRE COMPATIBLE

PELLENC COMPATIBLE

WWW.EDUARDOREPUESTOSAGRICOLAS.COM

ÍNDICE

EDUARDO REPUESTOS AGRÍCOLAS 3

NEW HOLLAND (original y compatible) 6

GREGOIRE (original y compatible) 28

PELLENC (original y compatible) 38

RESPOSTA A UMA NECESSIDADE

Nossas peças sobressalentes compatíveis representam uma **alternativa perfeitamente válida aos originais**. Oferecemos produtos confiáveis, testados individualmente em nosso laboratório técnico e a preços muito competitivos. A nossa **equipa de técnicos especializados** estuda as novas necessidades do sector para os adaptar a cada momento, melhorando assim o seu desempenho graças ao feedback que nos oferecem.

Oferecemos uma **ampla gama de produtos e serviços**. Somos fabricantes, como produtores de marca branca, e para outras empresas e distribuidores.

Desde o início, o objetivo principal tem sido a **obtenção das mesmas peças**, desde a injeção de peças plásticas, até a realização de correias transportadoras, usinagem, torneamento, montagem e, um longo etc. de processos.

LOCALIZAÇÃO PERFEITA

Eduardo Repuestos Agrícolas, pertencente ao grupo *Moldes y Resinas S.L.*, iniciou a sua atividade em 2012 pelas mãos de Eduardo Royo e María Rosa Lázaro, com o objetivo de **resolver as necessidades descobertas do mercado vitivinícola espanhol**.

Um dos fatores que tem favorecido o seu rápido crescimento é a sua localização: Burgos, um **ponto geográfico estratégico** a meio caminho entre a Ribera del Duero e La Rioja, referências vitivinícolas. Isto traduz-se numa constante renovação e aperfeiçoamento das **técnicas de criação, fabrico e produção dos componentes oferecidos**, bem como num olhar revolucionário às últimas técnicas do mundo da vinha e da oliveira.

UMA EQUIPE À SUA DISPOSIÇÃO

A Eduardo Repuestos Agrícolas é formada por uma **equipe dinâmica e decidida**, cujo principal objetivo é a satisfação do cliente.

A partir do escritório técnico da empresa, novas peças e produtos são testados e desenvolvidos para se adaptarem ao ritmo de mudança do setor. Na mesma linha, é oferecido um **serviço de design de soluções personalizadas** para atender às necessidades específicas de cada cliente.

A **vasta rede comercial e de distribuição** adquirida ao longo destes anos permite, desde o aconselhamento pessoal e resolução de quaisquer dúvidas, até ao recebimento da mercadoria, um processo no qual intervêm os diversos membros da equipa.

RESPONSABILIDADE E COMPROMISSO

O grupo busca alcançar **a mais alta qualidade, máximo sortimento e máximo serviço**, no menor tempo possível.

Portanto, **agilidade, pontualidade e comprometimento** são os pilares que sustentam esta empresa, considerados essenciais e básicos na gestão e expedição de produtos no dia a dia.

A filosofia dos trabalhadores que integram a *Eduardo Repuestos Agrícolas* reside em proporcionar ao consumidor **maior conforto** na hora de fazer compras, satisfazendo suas necessidades de produto aumentando a especialização e ajustando o preço. Em suma, o que você deseja é **aumentar a proximidade e a fidelidade do cliente**.

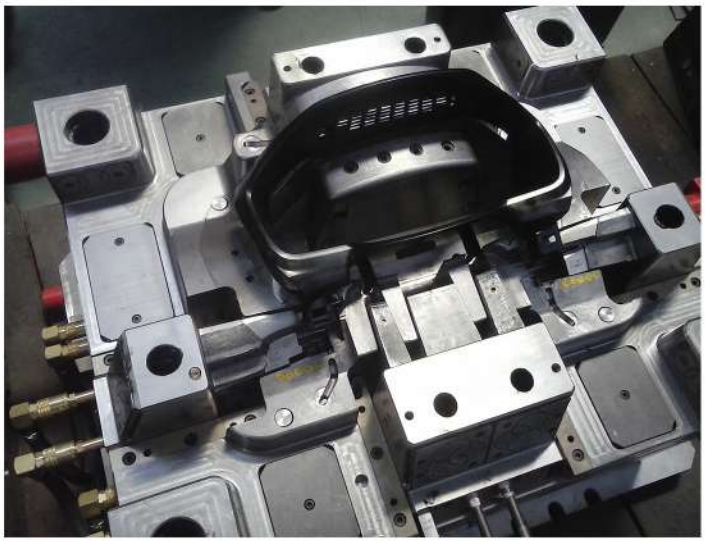

CATÁLOGO COMPLETO

Uma das principais características que diferenciam **nossa marca no mercado é que somos fabricantes, grande parte das peças partem de nossa própria oficina de design** com a escolha dos materiais, passam por um processo de fabricação e culminam no controle de qualidade.

Oferecemos, além de um amplo catálogo de **produtos próprios e compatíveis com outras marcas** (*New Holland*, *Gregoire e Pellenc*), o fornecimento de **outra série de produtos originais**, estejam ou não no catálogo.

Nossos produtos podem ser adquiridos **online ou fisicamente** em nossas instalações. Antes de qualquer dúvida ou problema, nosso escritório técnico trabalhará para sua resolução.

NACIONAL E INTERNACIONAL

Eduardo Repuestos Agrícolas iniciou sua presença na Espanha, mas aos poucos seus produtos chegaram a uma **multidão de pessoas de diferentes partes do mundo**.

O principal objetivo desta internacionalização é que todos possam usufruir da **qualidade e do bom preço dos nossos produtos**.

Tudo isto graças à competência e qualificação da equipa, que domina **diferentes linguagens** para que a relação com o cliente seja óptima e compreensível.

Da mesma forma, esteve presente em algumas das feiras agrícolas mais importantes ***FIMA, EIMA*** & ***SITEVI***.

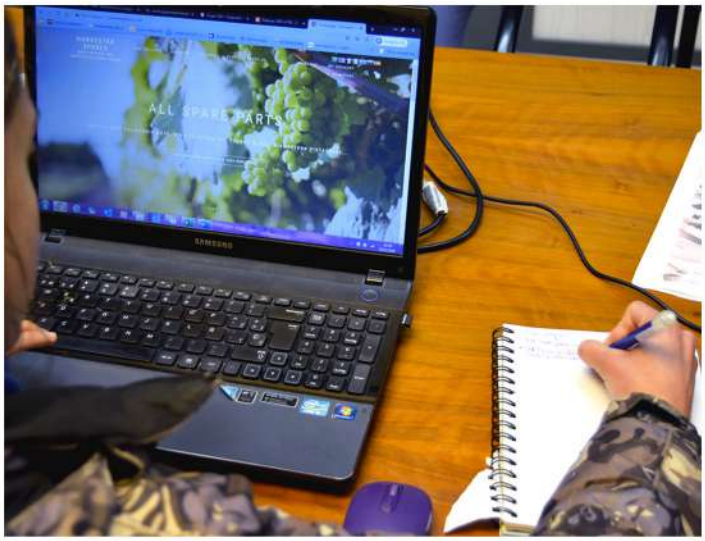

DESENVOLVIMENTO CONSTANTE

Na *Eduardo Repuestos Agrícolas* olhamos para o futuro com o objetivo de nos consolidar nos principais mercados mundiais, bem como ampliar nossas metas e objetivos em projetos e protótipos futuros.

Consideramos básica a experiência de todos estes anos, bem como aquele desejo intrínseco que nos leva a melhorar no dia a dia e a fornecer ao cliente o que ele necessita.

A cada ano melhoramos, a cada ano nosso catálogo fica maior e mais completo, mas tudo isso não seria possível sem você, sem aquela confiança que você deposita em nós e nos ajuda a ir um pouco mais longe.

Obrigado por sua lealdade e apoio.

~ Eduardo Repuestos Agrícolas

NEW HOLLAND-BRAUD
COMPATIBLE

EDUARDO

REF.201C

DIREITO BALDE DE ALTA CAPACIDADE

Comp. 944029647

8030L, 9030L, 9040L, 9050L H, 9050L L, 9050L SH, 9060L, 9060L GE, 9060L H, 9060L SH, 9070L H, 9070L L, 9070L L T5, 9070L SH, 9080L, 9080L GE, 9080L H, 9080L SH, 9090L, 9090L GE, 9090L H, 9090L H T4, 9090L H T5, 9090L SH, 9090L SH T4, 9090L SH T5, 9090L T3, 9090X, 9090X GE, 9090X GE T3, 9090X GE T4, 9090X GE T5, 9090X H, 9090X H H, 9090X H T4, 9090X O, 9090X O GE, 9090X O GE T3, 9090X O GE T4, 9090X O GE T5, 9090X O H T4, 9090X O T3, 9090X O T4, 9090X O T5, 9090X OP, 9090X OP GE, 9090X T3, 9090X T4, 9090X T5, , LM625, , SB56, SB58, SB60, SB62, SB64, SB65, VL600, VL6040, VL6050, VL6060, VL6070, VL6080, VL6090, VL610, VL620, VL630, VL640, VL660, VM4090, VX680, VX7090

REF.202C

LEFT BALDE DE ALTA CAPACIDADE

Comp. 944029648

8030L, 9030L, 9040L, 9050L H, 9050L L, 9050L SH, 9060L, 9060L GE, 9060L H, 9060L SH, 9070L H, 9070L L, 9070L L T5, 9070L SH, 9080L, 9080L GE, 9080L H, 9080L SH, 9090L, 9090L GE, 9090L H, 9090L H T4, 9090L H T5, 9090L SH, 9090L SH T4, 9090L SH T5, 9090L T3, 9090X, 9090X GE, 9090X GE T3, 9090X GE T4, 9090X GE T5, 9090X H, 9090X H H, 9090X H T4, 9090X O, 9090X O GE, 9090X O GE T3, 9090X O GE T4, 9090X O GE T5, 9090X O H T4, 9090X O T3, 9090X O T4, 9090X O T5, 9090X OP, 9090X OP GE, 9090X T3, 9090X T4, 9090X T5, , LM625, , SB36, SB56, SB58, SB60, SB62, SB64, SB65, VL600, VL6040, VL6050, VL6060, VL6070, VL6080, VL6090, VL610, VL620, VL630, VL640, VL660, VM4090, VX680, VX7090

REF.222C

KIT DE 10 DE ALTA CAPACIDADE DE DIREITO baldes, já configurado

Comp. 944024789

8030L, 9030L, 9040L, 9050L H, 9050L L, 9050L SH, 9060L, 9060L H, 9070L H, 9070L L, 9070L L T5, 9070L SH, 9080L, 9080L H, 9090L, 9090L H, 9090L H T4, 9090L H T5, 9090L SH T4, 9090L SH T5, 9090L T3, 9090X GE T3, 9090X GE T4, 9090X GE T5, 9090X H T4, 9090X O GE T3, 9090X O GE T4, 9090X O GE T5, 9090X O H T4, 9090X O T3, 9090X O T4, 9090X O T5, 9090X T3, 9090X T4, 9090X T5, SB56, SB58, SB60, SB62, SB64, SB65, VL600, VL6040, VL6050, VL6060, VL6070, VL6080, VL6090, VL610, VL620, VL630, VL640, VL660, VX680, VX7090

REF.223C

KIT DE 10 DE ALTA CAPACIDADE DE ESQUERDA baldes, já configurado

Comp. 944024790

8030L, 9030L, 9040L, 9050L H, 9050L L, 9050L SH, 9060L, 9060L H, 9070L H, 9070L L, 9070L L T5, 9070L SH, 9080L, 9080L H, 9090L, 9090L H, 9090L H T4, 9090L H T5, 9090L SH T4, 9090L SH T5, 9090L T3, 9090X GE T3, 9090X GE T4, 9090X GE T5, 9090X H T4, 9090X O GE T3, 9090X O GE T4, 9090X O GE T5, 9090X O H T4, 9090X O T3, 9090X O T4, 9090X O T5, 9090X T3, 9090X T4, 9090X T5, SB36, SB56, SB58, SB60, SB62, SB64, SB65, VL600, VL6040, VL6050, VL6060, VL6070, VL6080, VL6090, VL610, VL620, VL630, VL640, VL660, VX680, VX7090

REF.203C

DIREITO balde com bico longo

Comp. 944023785

7030L, SB33, SB35, SB36, SB53, SB55, SB56, SB58, SB60, SB62, SB64, SB65, VL5060, VL5080, VL5090, VL530, VL540, VL550, VL570, VM3080, VM3080 AL, VM3090, VN2090

REF.204C

LEFT balde com bico longo

Comp. 944023786

7030L, SB33, SB35, SB36, SB53, SB55, SB56, SB58, SB60, SB62, SB64, SB65, VL5060, VL5080, VL5090, VL530, VL540, VL550, VL570, VM3080, VM3080 AL, VM3090, VN2090

REF.224C

KIT DE 10 DIREITO baldes, bico longo, já configurado

Comp. 87629861

7030L, SB53, SB55, SB56, SB58, SB60, SB62, SB64, VL5060, VL5080, VL5090, VL530, VL540, VL550, VL570

REF.225C

KIT DE 10 ESQUERDA baldes, bico longo, já configurado

Comp. 87629862

7030L, SB53, SB55, SB56, SB58, SB60, SB62, SB64, VL5060, VL5080, VL5090, VL530, VL540, VL550, VL570

REF.735A

FUROS DIREITO BALDE COM TRÊS

Comp. 913350503

1620, 1620S, 2720, 7030M, 7030M H, 9040M, 9070M, 9080N H, 9080N L, SB33, SB35, SB36, SB53, SB55, SB56, SB58, SB60, SB62, SB64, VL5060, VL5080, VL5090, VL6040, VL6050, VL6060, VL6070, VL6080, VL6090, VM3080, VM3080 AL, VM3090, VM340, VM370, VM4090, VM460, VN2080, VN2090, VN240, VN260, VN300

REF.735B

Buracos deixados BALDE COM TRÊS

Comp. 913350502

1620, 1620S, 2720, 7030M, 7030M H, 9040M, 9070M, 9080N H, 9080N L, SB33, SB35, SB36, SB53, SB55, SB56, SB58, SB60, SB62, SB64, VL5060, VL5080, VL5090, VL6040, VL6050, VL6060, VL6070, VL6080, VL6090, VM3080, VM3080 AL, VM3090, VM340, VM370, VM4090, VM460, VN2080, VN2090, VN240, VN260, VN300

REF.735C

KIT 10 DIREITO balde com 3 buracos

Comp. 87629859

1620, 1620S, 2720, 7030M, 7030M H, 9040M, 9070M, 9080N H, 9080N L, SB33, SB35, SB36, VM3080, VM3090, VM340, VM370, VM4090, VM460, VN2080, VN240, VN260, VN300

REF.735D

KIT 10 ESQUERDA balde com 3 buracos

Comp. 87629860

1620, 1620S, 2720, 7030M, 7030M H, 9040M, 9070M, 9080N H, 9080N L, SB33, SB35, SB36, VM3080, VM3090, VM340, VM370, VM4090, VM460, VN2080, VN240, VN260, VN300

REF.712A

Hights MONTADOS BALDES 62 + 62 unidades. BRANCO DE CORRER

Comp. -

8030L, 9030L, 9040L, 9050L H, 9050L L, 9050L SH, 9060L, 9060L GE, 9060L H, 9060L SH, 9070L H, 9070L L, 9070L L T5, 9070L SH, 9080L, 9080L GE, 9080L H, 9080L SH, 9090L, 9090L GE, 9090L H, 9090L H T4, 9090L H T5, 9090L SH, 9090L SH T4, 9090L SH T5, 9090L T3, 9090X, 9090X GE, 9090X GE T3, 9090X GE T4, 9090X GE T5, 9090X H, 9090X H H, 9090X H T4, 9090X O, 9090X O GE, 9090X O GE T3, 9090X O GE T4, 9090X O GE T5, 9090X O H T4, 9090X O T3, 9090X O T4, 9090X O T5, 9090X OP, 9090X OP GE, 9090X T3, 9090X T4, 9090X T5, , LM625, , SB56, SB58, SB60, SB62, SB64, SB65, VL600, VL6040, VL6050, VL6060, VL6070, VL6080, VL6090, VL610, VL620, VL630, VL640, VL660, VM4090, VX680, VX7090

REF.712F

MONTADO hights BUCKETS 62 + 62 UNIDADES DE PRETO DE CORRER

Comp. -

8030L, 9030L, 9040L, 9050L H, 9050L L, 9050L SH, 9060L, 9060L GE, 9060L H, 9060L SH, 9070L H, 9070L L, 9070L L T5, 9070L SH, 9080L, 9080L GE, 9080L H, 9080L SH, 9090L, 9090L GE, 9090L H, 9090L H T4, 9090L H T5, 9090L SH, 9090L SH T4, 9090L SH T5, 9090L T3, 9090X, 9090X GE, 9090X GE T3, 9090X GE T4, 9090X GE T5, 9090X H, 9090X H H, 9090X H T4, 9090X O, 9090X O GE, 9090X O GE T3, 9090X O GE T4, 9090X O GE T5, 9090X O H T4, 9090X O T3, 9090X O T4, 9090X O T5, 9090X OP, 9090X OP GE, 9090X T3, 9090X T4, 9090X T5, , LM625, , SB56, SB58, SB60, SB62, SB64, SB65, VL600, VL6040, VL6050, VL6060, VL6070, VL6080, VL6090, VL610, VL620, VL630, VL640, VL660, VM4090, VX680, VX7090

REF.712G

MONTADO hights BALDES 62 + 62 UNIDADES DE AZUL SLIDNG

Comp. -

8030L, 9030L, 9040L, 9050L H, 9050L L, 9050L SH, 9060L, 9060L GE, 9060L H, 9060L SH, 9070L H, 9070L L, 9070L L T5, 9070L SH, 9080L, 9080L GE, 9080L H, 9080L SH, 9090L, 9090L GE, 9090L H, 9090L H T4, 9090L H T5, 9090L SH, 9090L SH T4, 9090L SH T5, 9090L T3, 9090X, 9090X GE, 9090X GE T3, 9090X GE T4, 9090X GE T5, 9090X H, 9090X H H, 9090X H T4, 9090X O, 9090X O GE, 9090X O GE T3, 9090X O GE T4, 9090X O GE T5, 9090X O H T4, 9090X O T3, 9090X O T4, 9090X O T5, 9090X OP, 9090X OP GE, 9090X T3, 9090X T4, 9090X T5, , LM625, , SB56, SB58, SB60, SB62, SB64, SB65, VL600, VL6040, VL6050, VL6060, VL6070, VL6080, VL6090, VL610, VL620, VL630, VL640, VL660, VM4090, VX680, VX7090

REF.712C

Hights MONTADOS BALDES 68 + 68 unidades. BRANCO DE CORRER

Comp. -

8030L, 9030L, 9040L, 9050L H, 9050L L, 9050L SH, 9060L, 9060L GE, 9060L H, 9060L SH, 9070L H, 9070L L, 9070L L T5, 9070L SH, 9080L, 9080L GE, 9080L H, 9080L SH, 9090L, 9090L GE, 9090L H, 9090L H T4, 9090L H T5, 9090L SH, 9090L SH T4, 9090L SH T5, 9090L T3, 9090X, 9090X GE, 9090X GE T3, 9090X GE T4, 9090X GE T5, 9090X H, 9090X H H, 9090X H T4, 9090X O, 9090X O GE, 9090X O GE T3, 9090X O GE T4, 9090X O GE T5, 9090X O H T4, 9090X O T3, 9090X O T4, 9090X O T5, 9090X OP, 9090X OP GE, 9090X T3, 9090X T4, 9090X T5, , LM625, , SB56, SB58, SB60, SB62, SB64, SB65, VL600, VL6040, VL6050, VL6060, VL6070, VL6080, VL6090, VL610, VL620, VL630, VL640, VL660, VM4090, VX680, VX7090

REF.712J

MONTADO hights BUCKETS 68 + 68 UNIDADES DE PRETO DE CORRER

Comp. -

8030L, 9030L, 9040L, 9050L H, 9050L L, 9050L SH, 9060L, 9060L GE, 9060L H, 9060L SH, 9070L H, 9070L L, 9070L L T5, 9070L SH, 9080L, 9080L GE, 9080L H, 9080L SH, 9090L, 9090L GE, 9090L H, 9090L H T4, 9090L H T5, 9090L SH, 9090L SH T4, 9090L SH T5, 9090L T3, 9090X, 9090X GE, 9090X GE T3, 9090X GE T4, 9090X GE T5, 9090X H, 9090X H H, 9090X H T4, 9090X O, 9090X O GE, 9090X O GE T3, 9090X O GE T4, 9090X O GE T5, 9090X O H T4, 9090X O T3, 9090X O T4, 9090X O T5, 9090X OP, 9090X OP GE, 9090X T3, 9090X T4, 9090X T5, , LM625, , SB56, SB58, SB60, SB62, SB64, SB65, VL600, VL6040, VL6050, VL6060, VL6070, VL6080, VL6090, VL610, VL620, VL630, VL640, VL660, VM4090, VX680, VX7090

REF.712K

MONTADO hights BALDES 68 + 68 UNIDADES DE AZUL SLIDNG

Comp. -

8030L, 9030L, 9040L, 9050L H, 9050L L, 9050L SH, 9060L, 9060L GE, 9060L H, 9060L SH, 9070L H, 9070L L, 9070L L T5, 9070L SH, 9080L, 9080L GE, 9080L H, 9080L SH, 9090L, 9090L GE, 9090L H, 9090L H T4, 9090L H T5, 9090L SH, 9090L SH T4, 9090L SH T5, 9090L T3, 9090X, 9090X GE, 9090X GE T3, 9090X GE T4, 9090X GE T5, 9090X H, 9090X H H, 9090X H T4, 9090X O, 9090X O GE, 9090X O GE T3, 9090X O GE T4, 9090X O GE T5, 9090X O H T4, 9090X O T3, 9090X O T4, 9090X O T5, 9090X OP, 9090X OP GE, 9090X T3, 9090X T4, 9090X T5, , LM625, , SB56, SB58, SB60, SB62, SB64, SB65, VL600, VL6040, VL6050, VL6060, VL6070, VL6080, VL6090, VL610, VL620, VL630, VL640, VL660, VM4090, VX680, VX7090

REF.712B

MONTADO SB BALDES 62 + 62 UNIDADES DE BRANCO DE CORRER

Comp. -

7030L, SB33, SB35, SB36, SB53, SB55, SB56, SB58, SB60, SB62, SB64, SB65, VL5060, VL5080, VL5090, VL530, VL540, VL550, VL570, VM3080, VM3080 AL, VM3090, VN2090

REF.712H

MONTADO SB BALDES 62 + 62 UNIDADES DE PRETO DE CORRER

Comp. -

7030L, SB33, SB35, SB36, SB53, SB55, SB56, SB58, SB60, SB62, SB64, SB65, VL5060, VL5080, VL5090, VL530, VL540, VL550, VL570, VM3080, VM3080 AL, VM3090, VN2090

Verifique a Ref. Antes.

Todas as marcas comerciais pertencem aos seus respectivos proprietários e seu uso é apenas para fins informativos.

WWW.EDUARDOREPUESTOSAGRICOLAS.COM

IVA não incluso

Transporte gratuito da UE para pedidos de 50

NEW HOLLAND-BRAUD COMPATIBLE

EDUARDO

REF.712D

MONTADO SB BALDES 55 + 55 UNIDADES DE BRANCO DE CORRER

Comp. -

7030L, SB33, SB35, SB36, SB53, SB55, SB56, SB58, SB60, SB62, SB64, SB65, VL5060, VL5080, VL5090, VL530, VL540, VL550, VL570, VM3080, VM3080 AL, VM3090, VN2090

REF.712L

MONTADO SB BALDES 55 + 55 UNIDADES DE PRETO DE CORRER

Comp. -

7030L, SB33, SB35, SB36, SB53, SB55, SB56, SB58, SB60, SB62, SB64, SB65, VL5060, VL5080, VL5090, VL530, VL540, VL550, VL570, VM3080, VM3080 AL, VM3090, VN2090

REF.712E

MONTADOS LITTES CUBETAS 55 + 55 unidades, BRANCO DE CORRER

Comp. -

1620, 1620S, 2720, 7030M, 7030M H, 9040M, 9070M, 9080N H, 9080N L, SB33, SB35, SB36, SB53, SB55, SB56, SB58, SB60, SB62, SB64, VL5060, VL5080, VL5090, VL6040, VL6050, VL6060, VL6070, VL6080, VL6090, VM3080, VM3080 AL, VM3090, VM340, VM370, VM4090, VM460, VN2080, VN2090, VN240, VN260, VN300

REF.205B

BRANCO DE CORRER DO RATO PARA BUCKETS

Comp. 944028054,944005832

1214, 1620, 1620S, 2414, 2420, 2514, 2520, 2614, 2620, 2714, 2720, 9040L, 9040M, 9060L, 9060L H, 9080L, 9080L H, 9090L, 9090L H, 9090X O, 9090X O GE, 9090X O GE T3, 9090X O GE T4, 9090X O GE T5, 9090X O H T4, 9090X O T3, 9090X O T4, 9090X O T5, 9090X OP, 9090X OP GE, , SB33, SB35, SB36, SB52, SB53, SB54, SB55, SB56, SB58, SB60, SB62, SB64, SB65, VL5060, VL5080, VL5090, VL530, VL540, VL550, VL570, VL600, VL6040, VL6050, VL6060, VL6070, VL6080, VL6090, VL610, VL620, VL630, VL640, VL660, VM3080, VM3080 AL, VM3090, VM340, VM370, VM4090, VM460, VN2080, VN2090, VN240, VN260, VN300, VX680, VX7090

REF.206B

PAD CORRER PRETO PARA BUCKETS

Comp. 84255554

7030L, 9030L, 9040L, 9040M, 9050L H, 9050L L, 9060L, 9060L GE, 9060L H, 9060L SH, 9070L H, 9070L L, 9070L L T5, 9070M, 9080L, 9080L GE, 9080L H, 9080L SH, 9090L, 9090L GE, 9090L H, 9090L H T4, 9090L H T5, 9090L SH, 9090L T3, 9090X, 9090X GE, 9090X H, 9090X H H, 9090X OP, 9090X OP GE, SB33, SB35, SB36, SB53, SB55, SB56, SB58, SB60, SB62, SB64, VL5060, VL5080, VL5090, VL530, VL540, VL550, VL570, VL600, VL6040, VL6050, VL6060, VL6070, VL6080, VL6090, VL610, VL620, VL630, VL640, VL660, VM3080, VM3080 AL, VM3090, VM340, VM370, VM4090, VM460, VN2080, VN2090, VN240, VN260, VN300, VX680, VX7090

REF.206C

PAD CORRER AZUL PARA BUCKETS

Comp. 84487735

7030M, 7030M H, 8030L, 9030L, 9050L H, 9050L L, 9050L SH, 9070L H, 9070L L, 9070L L T5, 9070L SH, 9070M, 9080N H, 9080N L, 9090L H T4, 9090L H T5, 9090L SH T4, 9090L SH T5, 9090L T3, 9090X GE T3, 9090X GE T4, 9090X GE T5, 9090X H T4, 9090X T3, 9090X T4, 9090X T5

REF.218B

BALDE placa de fixação 1,2 mm

Comp. 944023592

1214, 7030L, 8030L, 9030L, 9040L, 9050L H, 9050L L, 9050L SH, 9060L, 9060L GE, 9060L H, 9060L SH, 9070L H, 9070L L, 9070L L T5, 9070L SH, 9080L, 9080L GE, 9080L H, 9080L SH, 9090L, 9090L GE, 9090L H, 9090L H T4, 9090L H T5, 9090L SH, 9090L SH T4, 9090L SH T5, 9090L T3, 9090X, 9090X GE, 9090X GE T3, 9090X GE T4, 9090X GE T5, 9090X H H, 9090X H T4, 9090X O, 9090X O GE, 9090X O GE T3, 9090X O GE T4, 9090X O GE T5, 9090X O H T4, 9090X O T3, 9090X O T4, 9090X O T5, 9090X OP, 9090X OP GE, 9090X T3, 9090X T4, 9090X T5, LM625, SB36, SB52, SB53, SB54, SB55, SB56, SB58, SB60, SB62, SB64, SB65, VL5060, VL5080, VL5090, VL530, VL540, VL550, VL570, VL600, VL6040, VL6050, VL6060, VL6070, VL6080, VL6090, VL610, VL620, VL630, VL640, VL660, VM3080, VM3080 AL, VM3090, VM4090, VN2090, VX680, VX7090

REF.218E

NOVO ! REFORÇADO !

CLIP placa plástico BALDE DE FIXAÇÃO

Comp. 47844511

7030L, 8030L, 9030L, 9050L H, 9050L L, 9050L SH, 9070L H, 9070L L, 9070L L T5, 9070L SH, 9090L H T4, 9090L H T5, 9090L SH T4, 9090L SH T5, 9090L T3, 9090X GE T3, 9090X GE T4, 9090X GE T5, 9090X H T4, 9090X O GE T3, 9090X O GE T4, 9090X O GE T5, 9090X O H T4, 9090X O T3, 9090X O T4, 9090X O T5, 9090X T3, 9090X T4, 9090X T5,

REF.219D

STAINLESS STEEL RETENTOR colar para BALDE PAD CORRER Zn

Comp. 913126098

1214, 1620, 1620S, 2414, 2420, 2514, 2520, 2614, 2620, 2714, 2720, 7030L, 7030M, 7030M H, 8030L, 9030L, 9040L, 9040M, 9050L H, 9050L L, 9050L SH, 9060L, 9060L GE, 9060L H, 9060L SH, 9070L H, 9070L L, 9070L L T5, 9070L SH, 9070M, 9080L, 9080L GE, 9080L H, 9080L SH, 9080N H, 9080N L, 9090L, 9090L GE, 9090L H, 9090L H T4, 9090L H T5, 9090L SH, 9090L SH T4, 9090L SH T5, 9090L T3, 9090X, 9090X GE, 9090X GE T3, 9090X GE T4, 9090X GE T5, 9090X H, 9090X H H, 9090X H T4, 9090X O, 9090X O GE, 9090X O GE T3, 9090X O GE T4, 9090X O GE T5, 9090X O H T4, 9090X O T3, 9090X O T4, 9090X O T5, 9090X OP, 9090X OP GE, 9090X T3, 9090X T4, 9090X T5, SB33, SB35, SB36, SB52, SB53, SB54, SB55, SB56, SB58, SB60, SB62, SB64, SB65, VL5060, VL5080, VL5090, VL530, VL540, VL550, VL570, VL600, VL6040, VL6050, VL6060, VL6070, VL6080, VL6090, VL610, VL620, VL630, VL640, VL660, VM3080, VM3080 AL, VM3090, VM340, VM370, VM4090, VM460, VN2080, VN2090, VN240, VN260, VN300, VX680, VX7090

REF.220B

AÇO INOXIDÁVEL VL PLACA

Comp. 944029158

8030L, 9030L, 9040L, 9040M, 9050L H, 9050L L, 9050L SH, 9060L, 9060L GE, 9060L H, 9060L SH, 9070L H, 9070L L, 9070L L T5, 9070L SH, 9070M, 9080L, 9080L GE, 9080L H, 9080L SH, 9090L, 9090L GE, 9090L H, 9090L H T4, 9090L H T5, 9090L SH, 9090L SH T4, 9090L SH T5, 9090L T3, 9090X, 9090X GE, 9090X GE T3, 9090X GE T4, 9090X GE T5, 9090X H, 9090X H H, 9090X H T4, 9090X O, 9090X O GE, 9090X O GE T3, 9090X O GE T4, 9090X O GE T5, 9090X O H T4, 9090X O T3, 9090X O T4, 9090X O T5, 9090X OP, 9090X OP GE, 9090X T3, 9090X T4, 9090X T5, , SB33, SB35, SB52, SB53, SB54, SB55, SB64, SB65, VL5060, VL5080, VL5090, VL530, VL540, VL550, VL570, VL600, VL6040, VL6050, VL6060, VL6070, VL6080, VL6090, VL610, VL620, VL630, VL640, VL660, VM3080, VM3080 AL, VM3090, VM340, VM370, VM4090, VM460, VN2080, VN240, VN260, VN300, VX680, VX7090

REF.220D

AÇO INOXIDÁVEL SB PLACA

Comp. 944011361

2720, 7030L, SB33, SB35, SB36, SB52, SB53, SB54, SB55, SB56, SB58, SB60, SB62, SB64, SB65, VL5060, VL5080, VL5090, VL530, VL540, VL550, VL570, VM3080, VM3080 AL, VM3090, VM4090, VM460, VN2090, VN240

REF.220E

INOX SCRAPER DIREITO 4mm

Comp. 84184934

8030L, 9030L, 9040L, 9050L H, 9050L L, 9050L SH, 9060L, 9060L GE, 9060L H, 9060L SH, 9070L H, 9070L L, 9070L L T5, 9070L SH, 9080L, 9080L GE, 9080L H, 9080L SH, 9090L, 9090L GE, 9090L H, 9090L H T4, 9090L H T5, 9090L SH, 9090L SH T4, 9090L SH T5, 9090L T3, 9090X, 9090X GE, 9090X GE T3, 9090X GE T4, 9090X GE T5, 9090X H, 9090X H H, 9090X H T4, 9090X O, 9090X O GE, 9090X O GE T3, 9090X O GE T4, 9090X O GE T5, 9090X O H T4, 9090X O T3, 9090X O T4, 9090X O T5, 9090X OP, 9090X OP GE, 9090X T3, 9090X T4, 9090X T5, VX7090

REF.220F

INOX SCRAPER ESQUERDA 4mm

Comp. 84184934

8030L, 9030L, 9040L, 9050L H, 9050L L, 9050L SH, 9060L, 9060L GE, 9060L H, 9060L SH, 9070L H, 9070L L, 9070L L T5, 9070L SH, 9080L, 9080L GE, 9080L H, 9080L SH, 9090L, 9090L GE, 9090L H, 9090L H T4, 9090L H T5, 9090L SH, 9090L SH T4, 9090L SH T5, 9090L T3, 9090X, 9090X GE, 9090X GE T3, 9090X GE T4, 9090X GE T5, 9090X H, 9090X H H, 9090X H T4, 9090X O, 9090X O GE, 9090X O GE T3, 9090X O GE T4, 9090X O GE T5, 9090X O H T4, 9090X O T3, 9090X O T4, 9090X O T5, 9090X OP, 9090X OP GE, 9090X T3, 9090X T4, 9090X T5, VX7090

REF.221B

STAINLESS STEEL TAMPA PLACA 2mm

Comp. 944023349,913126

8030L, 9030L, 9040L, 9050L H, 9050L L, 9050L SH, 9060L, 9060L GE, 9060L H, 9060L SH, 9070L H, 9070L L, 9070L L T5, 9070L SH, 9080L, 9080L GE, 9080L H, 9080L SH, 9090L, 9090L GE, 9090L H, 9090L H T4, 9090L H T5, 9090L SH, 9090L SH T4, 9090L SH T5, 9090L T3, 9090X, 9090X GE, 9090X GE T3, 9090X GE T4, 9090X GE T5, 9090X H, 9090X H H, 9090X H T4, 9090X O, 9090X O GE, 9090X O GE T3, 9090X O GE T4, 9090X O GE T5, 9090X O H T4, 9090X O T3, 9090X O T4, 9090X O T5, 9090X OP, 9090X OP GE, 9090X T3, 9090X T4, 9090X T5, SB65, VL600, VL6040, VL6050, VL6060, VL6070, VL6080, VL6090, VL610, VL620, VL630, VL640, VL660, VM4090, VX680, VX7090

REF.737A

BALDE placa de fixação 3 FUROS

Comp. 944003810

SB60 ,SB62 ,SB64 ,VL5060 ,VL5080 ,VL5090 ,VL6040 ,VL6050 ,VL6060 ,VL6080 ,VL6090 ,VM3080 AL ,VM3080 ,VM3090 ,VM340 ,VM370 ,VM4090 ,VM460 ,VN2080 ,VN2090 ,VN260 ,7030M ,9070M ,9040M ,9080N H ,9080N H ,9080N L ,1620,1620S ,VL6070 ,VN240 ,VN300 ,2720,SB33 ,SB35 ,SB36 ,SB56 ,SB58 ,7030M H

REF.737B

Chapa de aço inoxidável BUCKET 3 FUROS

Comp. 47370664

7030M, 7030M H, 9070M, 9080N H, 9080N L, VN2080, VN2090

REF.737C

AÇO INOXIDÁVEL tampa da chapa 2 FUROS

Comp. 913126192

1214, 1620, 1620S, 2414, 2420, 2514, 2520, 2614, 2620, 2714, 2720, 7030L, 7030M, 7030M H, 9040M, 9070M, 9080N H, 9080N L, SB33, SB35, SB36, SB52, SB53, SB54, SB55, SB56, SB58, SB60, SB62, SB64, VL5060, VL5080, VL5090, VL530, VL540, VL550, VL570, VL6040, VL6050, VL6060, VL6070, VL6080, VL6090, VM3080, VM3080 AL, VM3090, VM340, VM370, VM4090, VM460, VN2080, VN2090, VN240, VN260, VN300

REF.229C

CADEIA PARA BUCKETS 267 etiquetas (11,6 metros) (67 BUCKETS)

Comp. 944032962

9030L, 9040L, 9040M, 9050L H, 9050L L, 9050L SH, 9060L, 9060L H, 9060L SH, 9070L H, 9070L L, 9070L L T5, 9070M, 9080L, 9080L H, 9080L SH, 9090L, 9090L H, 9090L H T4, 9090L H T5, 9090L SH, 9090L SH T4, 9090L T3, 9090X, 9090X GE, 9090X GE T4, 9090X H, 9090X H H, 9090X T4, VL600, VL6040, VL6050, VL6060, VL6070, VL6080, VL6090, VL610, VL620, VL630, VL640, VL660, VX680, VX7090

REF.229D

CADEIA PARA BUCKETS 247 etiquetas (10,7M) (62 baldes)

Comp. 944031392

9040L, 9040M, 9060L, 9060L GE, 9060L H, 9060L SH, 9080L, 9080L GE, 9080L H, 9080L SH, 9090L, SB36, SB56, SB58, SB60, SB62, SB64, VL600, VL6040, VL6050, VL6060, VL6070, VL6080, VL6090, VL610, VL620, VL630, VL640, VL660, VM4090

REF.229F

-Etiquetas de cadeia (100 metros)

Comp. -

9090X O, 9090X O GE, 9090X O GE T3, 9090X O GE T4, 9090X O GE T5, 9090X O H T4, 9090X O T3, 9090X O T4, 9090X O T5, 9090X OP, 9090X OP GE, VX7090

IVA não incluso

Transporte gratuito da UE para pedidos de 50

Todas as marcas comerciais pertencem aos seus respectivos proprietários e seu uso é apenas para fins informativos.

WWW.EDUARDOREPUESTOSAGRICOLAS.COM

Verifique a Ref. Antes.

NEW HOLLAND-BRAUD
COMPATIBLE

EDUARDO

REF.229G

CADEIA PARA BUCKETS 3 etiquetas

Comp. 913505083

9090X O, 9090X O GE, 9090X O GE T3, 9090X O GE T4, 9090X O GE T5, 9090X O H T4, 9090X O T3, 9090X O T4, 9090X O T5, 9090X OP, 9090X OP GE, VX7090

REF.229H

CORRENTE PARA ETIQUETAS BALDES 287 (11,92 m.) (72 BALDES) CABEÇA OLIVE

Comp. -

9090X O, 9090X O GE, 9090X O GE T3, 9090X O GE T4, 9090X O GE T5, 9090X O H T4, 9090X O T3, 9090X O T4, 9090X O T5, 9090X OP, 9090X OP GE, VX7090

REF.230B

BALDE BLIND NUT INOX

Comp. 920008124

1620, 1620S, 2414, 2420, 2514, 2520, 2614, 2620, 2714, 2720, 7030L, 7030M, 7030M H, 8030L, 9030L, 9040L, 9040M, 9050L H, 9050L L, 9050L SH, 9060L, 9060L GE, 9060L H, 9060L SH, 9070L H, 9070L L, 9070L L T5, 9070L SH, 9070M, 9070N H T5, 9070N L, 9070N L T5, 9070 , 9080L, 9080L GE, 9080L H, 9080L SH, 9080N H, 9080N L, 9090L, 9090L GE, 9090L H, 9090L H T4, 9090L H T5, 9090L SH, 9090L SH T4, 9090L SH T5, 9090L T3, 9090X, 9090X GE, 9090X GE T3, 9090X GE T4, 9090X GE T5, 9090X H, 9090X H H, 9090X H T4, 9090X O, 9090X O GE, 9090X O GE T3, 9090X O GE T4, 9090X O GE T5, 9090X O H T4, 9090X O T3, 9090X O T4, 9090X O T5, 9090X OP, 9090X OP GE, 9090X T3, 9090X T4, 9090X T5, 5833, 5835, 5836, 5852, 5853, 5854, 5855, 5856, 5858, 5860, 5862, 5864, 5865, VL5060, VL5080, VL5090, VL530, VL540, VL550, VL570, VL600, VL6040, VL6050, VL6060, VL6070, VL6080, VL6090, VL610, VL620, VL630, VL640, VL660, VM3080, VM3080 AL, VM3090, VM340, VM370, VM4090, VM460, VN2080, VN2090, VN240, VN260, VN300, VX680, VX7090

REF.231A

CADEIA DE LIGAÇÃO (completo)

Comp. 48147387(920008122+2pz913126220+86625003)

1214, 1620, 1620S, 2414, 2420, 2514, 2520, 2614, 2620, 2714, 2720, 7030L, 7030M, 7030M H, 8030L, 9030L, 9040L, 9040M, 9050L H, 9050L L, 9050L SH, 9060L, 9060L GE, 9060L H, 9060L SH, 9070L H, 9070L L, 9070L L T5, 9070L SH, 9070M, 9070N L, 9070N L T5, 9070 , 9080L, 9080L GE, 9080L H, 9080L SH, 9080N H, 9080N L, 9090L, 9090L GE, 9090L H, 9090L H T4, 9090L H T5, 9090L SH, 9090L SH T4, 9090L SH T5, 9090L T3, 9090X, 9090X GE, 9090X GE T3, 9090X GE T4, 9090X GE T5, 9090X H, 9090X H H, 9090X H T4, 9090X O, 9090X O GE, 9090X O GE T3, 9090X O GE T4, 9090X O GE T5, 9090X O H T4, 9090X O T3, 9090X O T4, 9090X O T5, 9090X OP, 9090X OP GE, 9090X T3, 9090X T4, 9090X T5, 5833, 5835, 5836, 5852, 5853, 5854, 5855, 5856, 5858, 5860, 5862, 5864, 5865, VL5060, VL5080, VL5090, VL530, VL540, VL550, VL570, VL600, VL6040, VL6050, VL6060, VL6070, VL6080, VL6090, VL610, VL620, VL630, VL640, VL660, VM3080, VM3080 AL, VM3090, VM340, VM370, VM4090, VM460, VN2080, VN2090, VN240, VN260, VN300, VX680, VX7090

REF.215B

AGITANDO ROD Ø32 MM, INNER FURO Ø15mm / 1739 MM

Comp. 944007307, 84171535,47699254

5860 ,5862 ,5864 ,5865 ,VL5060 ,VL5080 ,VL5090 ,VL6040 ,VL6050 ,VL6060 ,VL6080 ,VL6090 ,VM3080 AL , ,VM3080 ,VM3090 ,VM340 ,VM370 ,VM4090 ,VM460 ,VN2090 ,VX7090 ,VX7090,7030L ,7030M ,8030L ,9080L GE ,9080L ,9080L H ,9080L SH ,9090L ,9090L H ,9090L SH ,9050L H ,9090L H T4 ,9070L H ,9070L L ,9050L L ,9040L ,9060L GE ,9060L H ,9060L SH ,9070M ,9040M ,9090X O HEAD T4 ,9090X GE ,9090X ,9090X H ,9090X O GE ,9090X O ,9090X GE T4 ,9090X O GE T4 ,9090X T4 ,9090X O T4 ,9090X HEAD T4 ,9090X O GE T5 ,9090X GE T5 ,9090X T5 ,VL640 ,VL660 ,VX680 ,9060L ,9030L ,VL530 ,VL540 ,VL550 ,VL570 ,9090L GE ,VL600 ,VL6070 ,VL610 ,VL620 ,VL630 ,9090X O T3 ,9090X O T5 ,9090L H T5 ,9090L SH T4 ,9090X H HEAD ,9090X OP ,9090X O GE T3 ,9090X OP GE ,5833 ,5835 ,5836 ,5852 ,5853 ,5854 ,5855 ,5856 ,5858 ,9090X GE T3 ,9090X T3 ,9090L T3 ,9090L SH T5 ,7030M HEAD ,9050L SH ,9070L SH ,9070L L T5 ,9050L SH T5 ,9070M T5 ,9030L T5 ,9070L H T5 ,9070L SH T5 ,9050L H T5 ,9050L L T5 ,8030L T5 ,11.90X MULTI

REF.215E

BENT AGITANDO ROD Ø25 mm S. 9000N

Comp. 47699249, 944031167, 84174661

9080N H, 9080N L, VN2080, VN240, VN260

REF.232B

BAR FIBRA COM INOX tubo. BENT, olival (comprimento de 100 cm)

Comp. -

9090X O, 9090X O GE, 9090X O GE T3, 9090X O GE T4, 9090X O H T4, 9090X O T3, 9090X O T4, 9090X OP, 9090X OP GE, GREGOIRE 1, GREGOIRE

REF.233B

FIBRA BAR COM TUBO INOX.WITHOUT BEND, Olive Grove (comprimento 100 cm)

Comp. -

9090X O, 9090X O GE, 9090X O GE T3, 9090X O GE T4, 9090X O H T4, 9090X O T3, 9090X O T4, 9090X OP, 9090X OP GE, GREGOIRE 1, GREGOIRE

REF.104A

AZEITONAS INFERIOR AGITADOR 935 milímetros Ø28

Comp. 265574

9090X, 9090X GE, 9090X GE T3, 9090X GE T4, 9090X GE T5, 9090X H, 9090X H H, 9090X H T4, 9090X O, 9090X O GE, 9090X O GE T3, 9090X O GE T4, 9090X O GE T5, 9090X O H T4, 9090X O T3, 9090X O T4, 9090X O T5, 9090X OP, 9090X OP GE, 9090X T3, 9090X T4, 9090X T5, SB65, VX680, VX7090

REF.517A

HALF FLANGE

Comp. 944025739

7030M, 7030M H, 8030L, 9040L, 9040M, 9060L, 9060L GE, 9060L H, 9060L SH, 9080L, 9080L GE, 9080L H, 9080L SH, 9090L, 9090L GE, 9090L H, 9090L SH, 9090L T3, 9090X, 9090X GE, 9090X H, 9090X H H, VL5060, VL5080, VL5090, VL550, VL570, VL6040, VL6050, VL6060, VL6070, VL6080, VL6090, VL610, VL620, VL630, VL640, VL660, VM3080, VM3080 AL, VM3090, VM370, VM4090, VM460, VN2090, VX680, VX7090

REF.518A

HALF FLANGE

Comp. 944021280

7030M, 7030M H, 8030L, 9040L, 9040M, 9050L L, 9050L SH, 9060L, 9060L GE, 9060L H, 9060L SH, 9070L L, 9070L L T5, 9070L SH, 9070M, 9080L, 9080L GE, 9080L H, 9080L SH, 9090L, 9090L GE, 9090L H, 9090L SH, 9090L SH T4, 9090L SH T5, 9090L T3, 9090X, 9090X GE, 9090X H, 9090X H H, VL5060, VL5080, VL5090, VL550, VL570, VL6040, VL6050, VL6060, VL6070, VL6080, VL6090, VL610, VL620, VL630, VL640, VL660, VM3080, VM3080 AL, VM3090, VM370, VM4090, VM460, VN2090, VX680, VX7090

REF.519A

BUCHA Ø48 MM PARA FLANGE COLUNA

Comp. 944026268

7030M, 7030M H, 8030L, 9040L, 9040M, 9050L L, 9050L SH, 9060L, 9060L GE, 9060L H, 9060L SH, 9070L L, 9070L L T5, 9070L SH, 9070M, 9080L, 9080L GE, 9080L H, 9080L SH, 9090L, 9090L GE, 9090L H, 9090L SH, 9090L SH T4, 9090L SH T5, 9090L T3, 9090X, 9090X GE, 9090X H, 9090X H H, VL5060, VL5080, VL5090, VL550, VL570, VL6040, VL6050, VL6060, VL6070, VL6080, VL6090, VL610, VL620, VL630, VL640, VL660, VM3080, VM3080 AL, VM3090, VM370, VM4090, VM460, VN2090, VX680, VX7090

REF.519B

PARAFUSO M14X60ZN

Comp. 1116421

7030M, 7030M H, 8030L, 9030L, 9040L, 9040M, 9050L H, 9050L L, 9050L SH, 9060L, 9060L GE, 9060L H, 9060L SH, 9070L H, 9070L L, 9070L L T5, 9070L SH, 9070M, 9080L, 9080L GE, 9080L H, 9080L SH, 9090L, 9090L GE, 9090L H, 9090L H T4, 9090L H T5, 9090L SH, 9090L SH T4, 9090L SH T5, 9090L T3, 9090X, 9090X GE, 9090X GE T3, 9090X GE T4, 9090X GE T5, 9090X H, 9090X H H, 9090X T3, 9090X T4, 9090X T5, SB65, TL58 I, VL5060, VL5080, VL5090, VL530, VL540, VL550, VL570, VL600, VL6040, VL6050, VL6060, VL6070, VL6080, VL6090, VL610, VL620, VL630, VL640, VL660, VM3080, VM3080 AL, VM3090, VM340, VM370, VM4090, VM460, VX680, VX7090

REF.519C

VIS M14X50ZN

Comp. 1116221

1620, 1620S, 2420, 2520, 2620, 7030M, 7030M H, 8030L, 9030L, 9050L H, 9050L L, 9050L SH, 9070L H, 9070L L, 9070L L T5, 9070L SH, 9070M, 9090L H T4, 9090L H T5, 9090L SH T4, 9090L SH T5, 9090L T3, 9090X GE T3, 9090X GE T4, 9090X GE T5, 9090X T3, 9090X T4, 9090X T5, SB52, SB54, VL5060, VL5080, VL5090, VL530, VL540, VL550, VL570, VL600, VL6040, VL6050, VL6060, VL6070, VL6080, VL6090, VL610, VL620, VL630, VL640, VL660, VM3080, VM3080 AL, VM3090, VM340, VM370, VM4090, VM460, VX680, VX7090

REF.520A

STAINLESS STEEL TAMPA PLACA

Comp. 944025488

7030M, 7030M H, 8030L, 9040L, 9040M, 9050L L, 9050L SH, 9060L, 9060L GE, 9060L H, 9060L SH, 9070L L, 9070L L T5, 9070L SH, 9070M, 9080L, 9080L GE, 9080L H, 9080L SH, 9090L, 9090L GE, 9090L H, 9090L SH, 9090L SH T4, 9090L SH T5, 9090L T3, 9090X, 9090X GE, 9090X H, 9090X H H, VL5080, VL5090, VL550, VL570, VL6050, VL6060, VL6070, VL6080, VL6090, VL610, VL620, VL630, VL640, VL660, VM3080 AL, VM3090, VM370, VM4090, VM460, VX680, VX7090

REF.521A

GRUPO COMPLETO (Meia casca + Meia casca + bucha + 2 protetores + 2 parafusos M6 + 2 porcas M6 + 1 arruela M14 + 2 parafuso M14 + 2 porca M14)

Comp. -

7030M, 7030M H, 8030L, 9040L, 9040M, 9050L L, 9050L SH, 9060L, 9060L GE, 9060L H, 9060L SH, 9070L L, 9070L L T5, 9070L SH, 9070M, 9080L, 9080L GE, 9080L H, 9080L SH, 9090L, 9090L GE, 9090L H, 9090L SH, 9090L SH T4, 9090L SH T5, 9090L T3, 9090X, 9090X GE, 9090X H, 9090X H H, VL5080, VL5090, VL550, VL570, VL6050, VL6060, VL6070, VL6080, VL6090, VL610, VL620, VL630, VL640, VL660, VM3080 AL, VM3090, VM370, VM4090, VM460, VX680, VX7090,462

REF.546B

APOIO VARA DE FIBRA KIT

Comp. -

1214, 2414, 2514, 2614, 2714, 9090X GE T3, 9090X GE T4, 9090X GE T5, 9090X H, 9090X O, 9090X O GE, 9090X O GE T3, 9090X O GE T4, 9090X O H T4, 9090X O T3, 9090X O T4, 9090X O T5, SB65, T140, TB15, VX680, VX7090

REF.207B

AGITANDO ROD biela

Comp. 944035000, 87586176

7030L, 7030M, 7030M H, 8030L, 9030L, 9040L, 9040M, 9050L H, 9050L L, 9050L SH, 9060L, 9060L GE, 9060L H, 9060L SH, 9070L H, 9070L L, 9070L L T5, 9070L SH, 9070M, 9080L, 9080L GE, 9080L H, 9080L SH, 9090L, 9090L GE, 9090L H, 9090L H T4, 9090L H T5, 9090L SH, 9090L SH T4, 9090L SH T5, 9090L T3, 9090X, 9090X GE, 9090X GE T3, 9090X GE T4, 9090X GE T5, 9090X H, 9090X H H, 9090X H T4, 9090X O, 9090X O GE, 9090X O GE T3, 9090X O GE T4, 9090X O GE T5, 9090X O H T4, 9090X O T3, 9090X O T4, 9090X O T5, 9090X OP, 9090X OP GE, 9090X T3, 9090X T4, 9090X T5, , VL5060, VL5080, VL5090, VL530, VL540, VL550, VL570, VL600, VL6040, VL6050, VL6060, VL6070, VL6080, VL6090, VL610, VL620, VL630, VL640, VL660, VM3080, VM3080 AL, VM3090, VM340, VM370, VM4090, VM460, VX680, VX7090

REF.208B

AGITANDO bastonete biela

Comp. 944036901, 87586178

7030L, 7030M, 7030M H, 8030L, 9030L, 9040L, 9040M, 9050L H, 9050L L, 9050L SH, 9060L, 9060L GE, 9060L H, 9060L SH, 9070L H, 9070L L, 9070L L T5, 9070L SH, 9070M, 9080L, 9080L GE, 9080L H, 9080L SH, 9090L, 9090L GE, 9090L H, 9090L H T4, 9090L H T5, 9090L SH, 9090L SH T4, 9090L SH T5, 9090L T3, 9090X, 9090X GE, 9090X GE T3, 9090X GE T4, 9090X GE T5, 9090X H, 9090X H H, 9090X H T4, 9090X T3, 9090X T4, 9090X T5, VL5060, VL5080, VL5090, VL550, VL570, VL600, VL6040, VL6050, VL6060, VL6070, VL6080, VL6090, VL610, VL620, VL630, VL640, VL660, VM3080, VM3080 AL, VM3090, VM340, VM370, VM4090, VM460, VX680, VX7090

Verifique a Ref. Antes.

Todas as marcas comerciais pertencem aos seus respectivos proprietários e seu uso é apenas para fins informativos.

WWW.EDUARDOREPUESTOSAGRICOLAS.COM

IVA não incluso

Transporte gratuito da UE para pedidos de 50

NEW HOLLAND-BRAUD COMPATIBLE

EDUARDO

REF.209B

PLASTIC BUCHA PARA biela COMPONENTES

Comp. 944031036

7030L, 7030M, 7030M H, 8030L, 9030L, 9040L, 9040M, 9050L H, 9050L L, 9050L SH, 9060L, 9060L GE, 9060L H, 9060L SH, 9070L H, 9070L L, 9070L L T5, 9070L SH, 9070M, 9080L, 9080L GE, 9080L H, 9080L SH, 9090L, 9090L GE, 9090L H, 9090L SH T4, 9090L SH T5, 9090L SH, 9090L SH T4, 9090L SH T5, 9090L T3, 9090X, 9090X GE, 9090X GE T3, 9090X GE T4, 9090X GE T5, 9090X H, 9090X H H, 9090X H T4, 9090X O, 9090X O GE, 9090X O GE T3, 9090X O GE T4, 9090X O GE T5, 9090X O H T4, 9090X O T3, 9090X O T4, 9090X O T5, 9090X OP, 9090X OP GE, 9090X T3, 9090X T4, 9090X T5, VL5060, VL5080, VL5090, VL530, VL540, VL550, VL570, VL600, VL6040, VL6050, VL6060, VL6070, VL6080, VL6090, VL610, VL620, VL630, VL640, VL660, VM3080, VM3080 AL, VM3090, VM340, VM370, VM4090, VM460, VX680, VX7090

REF.209C

WHASER ROD AGITANDO

Comp. 944034949

7030L, 7030M, 7030M H, 8030L, 9030L, 9040L, 9040M, 9050L H, 9050L L, 9050L SH, 9060L, 9060L GE, 9060L H, 9060L SH, 9070L H, 9070L L, 9070L L T5, 9070L SH, 9070M, 9080L, 9080L GE, 9080L H, 9080L SH, 9090L, 9090L GE, 9090L H, 9090L H T4, 9090L H T5, 9090L SH, 9090L SH T4, 9090L SH T5, 9090L T3, 9090X, 9090X GE, 9090X GE T3, 9090X GE T4, 9090X GE T5, 9090X H, 9090X H H, 9090X H T4, 9090X O, 9090X O GE, 9090X O GE T3, 9090X O GE T4, 9090X O GE T5, 9090X O H T4, 9090X O T3, 9090X O T4, 9090X O T5, 9090X OP, 9090X OP GE, 9090X T3, 9090X T4, 9090X T5, VL5060, VL5080, VL5090, VL530, VL540, VL550, VL570, VL600, VL6040, VL6050, VL6060, VL6070, VL6080, VL6090, VL610, VL620, VL630, VL640, VL660, VM3080, VM3080 AL, VM3090, VM340, VM370, VM4090, VM460, VX680, VX7090

REF.209D

MANGA

Comp. 944035002

7030L, 7030M, 7030M H, 8030L, 9030L, 9040L, 9040M, 9050L H, 9050L L, 9050L SH, 9060L, 9060L GE, 9060L H, 9060L SH, 9070L H, 9070L L, 9070L L T5, 9070L SH, 9070M, 9080L, 9080L GE, 9080L H, 9080L SH, 9090L, 9090L GE, 9090L H, 9090L H T4, 9090L H T5, 9090L SH, 9090L SH T4, 9090L SH T5, 9090L T3, 9090X, 9090X GE, 9090X GE T3, 9090X GE T4, 9090X GE T5, 9090X H, 9090X H H, 9090X H T4, 9090X O, 9090X O GE, 9090X O GE T3, 9090X O GE T4, 9090X O GE T5, 9090X O H T4, 9090X O T3, 9090X O T4, 9090X O T5, 9090X OP, 9090X OP GE, 9090X T3, 9090X T4, 9090X T5, VL5060, VL5080, VL5090, VL530, VL540, VL550, VL570, VL600, VL6040, VL6050, VL6060, VL6070, VL6080, VL6090, VL610, VL620, VL630, VL640, VL660, VM3080, VM3080 AL, VM3090, VM340, VM370, VM4090, VM460, VX680, VX7090

REF.210B

COMPONENTES biela (PIVOT TRATADO TERMICAMENTE)

944034949

7030L, 7030M, 7030M H, 8030L, 9030L, 9040L, 9040M, 9050L H, 9050L L, 9050L SH, 9060L, 9060L GE, 9060L H, 9060L SH, 9070L H, 9070L L, 9070L L T5, 9070L SH, 9070M, 9080L, 9080L GE, 9080L H, 9080L SH, 9090L, 9090L GE, 9090L H, 9090L H T4, 9090L H T5, 9090L SH, 9090L SH T4, 9090L SH T5, 9090L T3, 9090X, 9090X GE, 9090X GE T3, 9090X GE T4, 9090X GE T5, 9090X H, 9090X H H, 9090X H T4, 9090X O, 9090X O GE, 9090X O GE T3, 9090X O GE T4, 9090X O GE T5, 9090X O H T4, 9090X O T3, 9090X O T4, 9090X O T5, 9090X OP, 9090X OP GE, 9090X T3, 9090X T4, 9090X T5, VL5060, VL5080, VL5090, VL530, VL540, VL550, VL570, VL600, VL6040, VL6050, VL6060, VL6070, VL6080, VL6090, VL610, VL620, VL630, VL640, VL660

REF.211B

COMPLET AGITANDO ROD biela

Comp. -

7030L, 7030M, 7030M H, 8030L, 9030L, 9040L, 9040M, 9050L H, 9050L L, 9050L SH, 9060L, 9060L GE, 9060L H, 9060L SH, 9070L H, 9070L L, 9070L L T5, 9070L SH, 9070M, 9080L, 9080L GE, 9080L H, 9080L SH, 9090L, 9090L GE, 9090L H, 9090L H T4, 9090L H T5, 9090L SH, 9090L SH T4, 9090L SH T5, 9090L T3, 9090X, 9090X GE, 9090X GE T3, 9090X GE T4, 9090X GE T5, 9090X H, 9090X H H, 9090X H T4, 9090X O, 9090X O GE, 9090X O GE T3, 9090X O GE T4, 9090X O GE T5, 9090X O H T4, 9090X O T3, 9090X O T4, 9090X O T5, 9090X OP, 9090X OP GE, 9090X T3, 9090X T4, 9090X T5, , VL5060, VL5080, VL5090, VL530, VL540, VL550, VL570, VL600, VL6040, VL6050, VL6060, VL6070, VL6080, VL6090, VL610, VL620, VL630, VL640, VL660, VM3080, VM3080 AL, VM3090, VM340, VM370, VM4090, VM460, VX680, VX7090

REF.212B

COMPLET AGITANDO ROD biela FORMA

Comp. -

7030L, 7030M, 7030M H, 8030L, 9030L, 9040L, 9040M, 9050L H, 9050L L, 9050L SH, 9060L, 9060L GE, 9060L H, 9060L SH, 9070L H, 9070L L, 9070L L T5, 9070L SH, 9070M, 9080L, 9080L GE, 9080L H, 9080L SH, 9090L, 9090L GE, 9090L H, 9090L H T4, 9090L H T5, 9090L SH, 9090L SH T4, 9090L SH T5, 9090L T3, 9090X, 9090X GE, 9090X GE T3, 9090X GE T4, 9090X GE T5, 9090X H, 9090X H H, 9090X H T4, 9090X O, 9090X O GE, 9090X O GE T3, 9090X O GE T4, 9090X O GE T5, 9090X O H T4, 9090X O T3, 9090X O T4, 9090X O T5, 9090X OP, 9090X OP GE, 9090X T3, 9090X T4, 9090X T5, , VL5060, VL5080, VL5090, VL530, VL540, VL550, VL570, VL600, VL6040, VL6050, VL6060, VL6070, VL6080, VL6090, VL610, VL620, VL630, VL640, VL660, VM3080, VM3080 AL, VM3090, VM340, VM370, VM4090, VM460, VX680, VX7090

REF.226A

PROTECTOR AGITANDO ROD NOVO

Comp. 944027099

7030L, 7030M, 7030M H, 8030L, 9030L, 9040L, 9040M, 9050L H, 9050L L, 9050L SH, 9060L, 9060L GE, 9060L H, 9060L SH, 9070L H, 9070L L, 9070L L T5, 9070L SH, 9070M, 9080L, 9080L GE, 9080L H, 9080L SH, 9090L, 9090L GE, 9090L H, 9090L H T4, 9090L H T5, 9090L SH, 9090L SH T4, 9090L SH T5, 9090L T3, 9090X, 9090X GE, 9090X GE T3, 9090X GE T4, 9090X GE T5, 9090X H, 9090X H H, 9090X H T4, 9090X O, 9090X O GE, 9090X O GE T3, 9090X O GE T4, 9090X O GE T5, 9090X O H T4, 9090X O T3, 9090X O T4, 9090X O T5, VL5080, VL5090, VL550, VL570, VL6050, VL6060, VL6070, VL6080, VL6090, VL610, VL620, VL630, VL640, VL660, VM3080, VM3080 AL, VM3090, VM340, VM370, VM4090, VM460, VX680, VX7090

REF.227A

STAINLESS STEEL FITTING END para agitar ROD

Comp. 944029130

7030L, 7030M, 7030M H, 8030L, 9030L, 9040L, 9040M, 9050L H, 9050L L, 9050L SH, 9060L, 9060L GE, 9060L H, 9060L SH, 9070L H, 9070L L, 9070L L T5, 9070L SH, 9070M, 9080L, 9080L GE, 9080L H, 9080L SH, 9090L, 9090L GE, 9090L H, 9090L H T4, 9090L H T5, 9090L SH, 9090L SH T4, 9090L SH T5, 9090L T3, 9090X, 9090X GE, 9090X GE T3, 9090X GE T4, 9090X GE T5, 9090X H, 9090X H H, 9090X H T4, 9090X O, 9090X O GE, 9090X O GE T3, 9090X O GE T4, 9090X O GE T5, 9090X O H T4, 9090X O T3, 9090X O T4, 9090X O T5, 9090X OP, 9090X OP GE, 9090X T3, 9090X T4, 9090X T5, SB33, SB35, SB53, SB55, VL5060, VL5080, VL5090, VL530, VL540, VL550, VL570, VL600, VL6040, VL6050, VL6060, VL6070, VL6080, VL6090, VL610, VL620, VL630, VL640, VL660, VM3080, VM3080 AL, VM3090, VM340, VM370, VM4090, VM460, VN2090, VN300, VX680, VX7090

REF.263A

AGITANDO titular da vara flange STAINLESS STEEL

Comp. 944001181

1620, 1620S, 2420, 2520, 2620, 2720, 7030L, 7030M, 7030M H, 8030L, 9030L, 9040L, 9040M, 9050L H, 9050L L, 9050L SH, 9060L, 9060L GE, 9060L H, 9060L SH, 9070L H, 9070L L, 9070L L T5, 9070L SH, 9070M, 9080L, 9080L GE, 9080L H, 9080L SH, 9090L, 9090L GE, 9090L H, 9090L H T4, 9090L H T5, 9090L SH, 9090L SH T4, 9090L SH T5, 9090L T3, 9090X, 9090X GE, 9090X GE T3, 9090X GE T4, 9090X GE T5, 9090X H, 9090X H H, 9090X H T4, 9090X O, 9090X O GE, 9090X O GE T3, 9090X O GE T4, 9090X O GE T5, 9090X O H T4, 9090X O T3, 9090X O T4, 9090X O T5, 9090X OP, 9090X OP GE, 9090X T3, 9090X T4, 9090X T5, SB33, SB35, SB53, SB55, SB56, SB58, SB60, SB62, SB64, SB65, VL5060, VL5080, VL5090, VL530, VL540, VL550, VL570, VL600, VL6040, VL6050, VL6060, VL6070, VL6080, VL6090, VL610, VL620, VL630, VL640, VL660, VM3080, VM3080 AL, VM3090, VM340, VM370, VM4090, VM460, VN2080, VN2090, VN300, VX680, VX7090

REF.286A

BRAUD LIGAÇÃO biela SET - NOVA VERSÃO

Comp. -

VL5060 ,VL6040 ,7030L ,8030L ,9070L L ,9050L L ,9040L ,9090X GE T4 ,9090X T4 ,9090X H T4 ,9090X GE T5 ,9090X T5 ,9060L ,9030L ,VL530 ,VL540 ,VL600 ,SB33 ,SB35 ,SB53 ,SB55 ,9090X GE T3 ,9090X T3 ,9090L T3 ,9070L L T5

REF.286B

BRAUD LIGAÇÃO EM FORMA biela SET - NOVA VERSÃO

Comp. -

VL5060 ,VL6040 ,7030L ,8030L ,9070L L ,9050L L ,9040L ,9090X GE T4 ,9090X T4 ,9090X H T4 ,9090X GE T5 ,9090X T5 ,9060L ,9030L ,VL530 ,VL540 ,VL600 ,SB33 ,SB35 ,SB53 ,SB55 ,9090X GE T3 ,9090X T3 ,9090L T3 ,9070L L T5

REF.287A

LIGAÇÃO biela SET SUBSTITUIÇÃO DA HASTE METÁLICA

Comp. -

VL5080 ,VL5090 ,VL6050 ,VL6060 ,VL6080 ,VL6090 ,VM3080 AL ,VM3090 ,VM370 ,VM4090 ,VM460 ,VX7090 ,7030L ,7030M ,8030L ,9080L GE ,9080L ,9080L H ,9080L SH ,9090L ,9090L H ,9090L SH ,9050L H ,9090L H T4 ,9070L H ,9070L L ,9050L L ,9040L ,9060L GE ,9060L H ,9060L SH ,9070M ,9040M ,9090X O H T4 ,9090X GE ,9090X ,9090X H ,9090X GE T4 ,9090X T4 ,9090X H T4 ,9090X O, 9090X O GE, 9090X O GE T3, 9090X GE T5 ,9090X T5 ,VL640 ,VL660 ,VX680 ,9060L ,9030L ,VL550 ,VL570 ,9090L GE ,VL6070 ,VL610 ,VL620 ,VL630 ,9090L H T5 ,9090L SH T4 ,9090X H H ,9090X GE T3 ,9090X T3 ,9090L T3 ,9090L SH T5 ,7030M H ,9050L SH ,9070L SH ,9070L L T5 ,

REF.287B

LIGAÇÃO biela SET EM FORMA SUBSTITUIÇÃO DA HASTE METÁLICA

Comp. -

VL5080 ,VL5090 ,VL6050 ,VL6060 ,VL6080 ,VL6090 ,VM3080 AL ,VM3090 ,VM370 ,VM4090 ,VM460 ,VX7090 ,7030L ,7030M ,8030L ,9080L GE ,9080L ,9080L H ,9080L SH ,9090L ,9090L H ,9090L SH ,9050L H ,9090L H T4 ,9070L H ,9070L L ,9050L L ,9040L ,9060L GE ,9060L H ,9060L SH ,9070M ,9040M ,9090X O H T4 ,9090X GE ,9090X ,9090X H ,9090X GE T4 ,9090X T4 ,9090X H T4 ,9090X O, 9090X O GE, 9090X O GE T3, 9090X GE T5 ,9090X T5 ,VL640 ,VL660 ,VX680 ,9060L ,9030L ,VL550 ,VL570 ,9090L GE ,VL6070 ,VL610 ,VL620 ,VL630 ,9090L H T5 ,9090L SH T4 ,9090X H H ,9090X GE T3 ,9090X T3 ,9090L T3 ,9090L SH T5 ,7030M H ,9050L SH ,9070L SH ,9070L L T5 ,

REF.290A

AGITANDO FLANGE BURACO HEXAGONAL COMPATIBLE

Comp. 920017521

1620, 1620S, 2420, 2520, 2620, 2720, 7030L, 7030M, 7030M H, 8030L, 9030L, 9040L, 9040M, 9050L H, 9050L L, 9050L SH, 9060L, 9060L GE, 9060L H, 9060L SH, 9070L H, 9070L L, 9070L L T5, 9070L SH, 9070M, 9080L, 9080L GE, 9080L H, 9080L SH, 9090L, 9090L GE, 9090L H, 9090L H T4, 9090L H T5, 9090L SH, 9090L SH T4, 9090L SH T5, 9090L T3, 9090X, 9090X GE, 9090X GE T3, 9090X GE T4, 9090X GE T5, 9090X H, 9090X H H, 9090X H T4, 9090X O H T4, 9090X T3, 9090X T4, 9090X T5, SB33, SB35, SB36, SB52, SB53, SB54, SB55, SB56, SB58, SB60, SB62, SB64, SB65, VL5060, VL5080, VL5090, VL530, VL540, VL550, VL570, VL600, VL6040, VL6050, VL6060, VL6070, VL6080, VL6090, VL610, VL620, VL630, VL640, VL660, VM3080, VM3080 AL, VM3090, VM340, VM370, VM4090, VM460, VN2090, VN300, VX680, VX7090

REF.290B

AGITANDO FLANGE BURACO REDONDO

Comp. 944025756

7030M, 7030M H, 8030L, 9040L, 9040M, 9050L H, 9050L L, 9050L SH, 9060L, 9060L GE, 9060L H, 9060L SH, 9070L H, 9070L L, 9070L L T5, 9070L SH, 9070M, 9080L, 9080L GE, 9080L H, 9080L SH, 9090L, 9090L GE, 9090L H, 9090L H T4, 9090L H T5, 9090L SH, 9090L SH T4, 9090L SH T5, 9090L T3, 9090X, 9090X GE, 9090X GE T3, 9090X GE T4, 9090X GE T5, 9090X H, 9090X H H, 9090X H T4, 9090X O, 9090X O GE, 9090X O GE T3, 9090X O GE T4, 9090X O GE T5, 9090X O H T4, 9090X O T3, 9090X O T4, 9090X O T5, 9090X OP, 9090X OP GE, 9090X T3, 9090X T4, 9090X T5, VL5060, VL5080, VL5090, VL530, VL540, VL550, VL570, VL6040, VL6050, VL6060, VL6070, VL6080, VL6090, VL610, VL620, VL630, VL640, VL660, VM3080, VM3080 AL, VM3090, VM370, VM4090, VM460, VN2090, VX680, VX7090

REF.291A

STAINLESS STEEL AGITANDO ROD placa de fixação

Comp. 944007696

1620, 1620S, 2420, 2520, 2620, 2720, 7030L, 7030M, 7030M H, 8030L, 9030L, 9040L, 9040M, 9050L H, 9050L L, 9050L SH, 9060L, 9060L GE, 9060L H, 9060L SH, 9070L H, 9070L L, 9070L L T5, 9070L SH, 9070M, 9080L, 9080L GE, 9080L H, 9080L SH, 9080N H, 9080N L, 9090L, 9090L GE, 9090L H, 9090L H T4, 9090L H T5, 9090L SH, 9090L SH T4, 9090L SH T5, 9090L T3, 9090X, 9090X GE, 9090X GE T3, 9090X GE T4, 9090X GE T5, 9090X H, 9090X H H, 9090X H T4, 9090X O, 9090X O GE, 9090X O GE T3, 9090X O GE T4, 9090X O GE T5, 9090X O H T4, 9090X O T3, 9090X O T4, 9090X O T5, 9090X OP, 9090X OP GE, 9090X T3, 9090X T4, 9090X T5, SB33, SB35, SB36, SB52, SB53, SB54, SB55, SB56, SB58, SB60, SB62, SB64, SB65, VL5060, VL5080, VL5090, VL530, VL540, VL550, VL570, VL600, VL6040, VL6050, VL6060, VL6070, VL6080, VL6090, VL610, VL620, VL630, VL640, VL660, VM3080, VM3080 AL, VM3090, VM340, VM370, VM4090, VM460, VN2080, VN2090, VN240, VN260, VN300, VX680, VX7090

REF.292A

STAINLESS STEEL biela PLACA

Comp. 944027125

7030L, 7030M, 7030M H, 8030L, 9030L, 9040L, 9040M, 9050L H, 9050L L, 9050L SH, 9060L, 9060L GE, 9060L H, 9060L SH, 9070L H, 9070L L, 9070L L T5, 9070L SH, 9070M, 9080L, 9080L GE, 9080L H, 9080L SH, 9090L, 9090L GE, 9090L H, 9090L H T4, 9090L H T5, 9090L SH, 9090L SH T4, 9090L SH T5, 9090L T3, 9090X, 9090X GE, 9090X GE T3, 9090X GE T4, 9090X GE T5, 9090X H, 9090X H H, 9090X H T4, 9090X O, 9090X O GE, 9090X O GE T3, 9090X O GE T4, 9090X O GE T5, 9090X O H T4, 9090X O T3, 9090X O T4, 9090X O T5, 9090X OP, 9090X OP GE, 9090X T3, 9090X T4, 9090X T5, SB33, SB35, SB53, SB55, VL5060, VL5080, VL5090, VL530, VL540, VL550, VL570, VL600, VL6040, VL6050, VL6060, VL6070, VL6080, VL6090, VL610, VL620, VL630, VL640, VL660, VM3080, VM3080 AL, VM3090, VM340, VM370, VM4090, VM460, VX680, VX7090

REF.297A

PROTECTOR AGITANDO ROD NOVO sup

Comp. 944026496

7030L, 7030M, 7030M H, 8030L, 9030L, 9040L, 9040M, 9050L H, 9050L L, 9050L SH, 9060L, 9060L GE, 9060L H, 9060L SH, 9070L H, 9070L L, 9070L L T5, 9070L SH, 9070M, 9080L, 9080L GE, 9080L H, 9080L SH, 9090L, 9090L GE, 9090L H, 9090L H T4, 9090L H T5, 9090L SH, 9090L SH T4, 9090L SH T5, 9090L T3, 9090X, 9090X GE, 9090X GE T3, 9090X GE T4, 9090X GE T5, 9090X H, 9090X H H, 9090X H T4, 9090X O, 9090X O GE, 9090X O GE T3, 9090X O GE T4, 9090X O GE T5, 9090X O H T4, 9090X O T3, 9090X O T4, 9090X O T5, 9090X OP, 9090X OP GE, 9090X T3, 9090X T4, 9090X T5, VL5060, VL5080, VL5090, VL530, VL540, VL550, VL570, VL600, VL6040, VL6050, VL6060, VL6070, VL6080, VL6090, VL610, VL620, VL630, VL640, VL660, VM3080, VM3080 AL, VM3090, VM340, VM370, VM4090, VM460, VN2090, VX680, VX7090

REF.298A

SUPORTE PARAFUSO PARA 2 parafusos

Comp. 944026586

7030L, 8030L, 9030L, 9040L, 9050L L, 9060L, 9070L L, 9070L L T5, 9090L T3, 9090X GE T3, 9090X GE T4, 9090X GE T5, 9090X H T4, 9090X T3, 9090X T4, 9090X T5, SB33, SB35, SB53, SB55, VL5060, VL530, VL540, VL600, VL6040

REF.717A

APOIO NÃO-FINAL

Comp. 944005665

7030L, 7030M, 7030M H, 8030L, 9030L, 9040L, 9040M, 9050L H, 9050L L, 9060L, 9060L GE, 9060L H, 9070L H, 9070L L, 9070L L T5, 9070M, 9080L, 9080L GE, 9080L H, 9090L, 9090L GE, 9090L H, 9090L H T4, 9090L H T5, 9090L T3, 9090X, 9090X GE, 9090X GE T3, 9090X GE T4, 9090X GE T5, 9090X H, 9090X H H, 9090X H T4, 9090X O, 9090X O GE, 9090X O GE T3, 9090X O GE T4, 9090X O GE T5, 9090X O H T4, 9090X O T3, 9090X O T4, 9090X O T5, 9090X OP, 9090X OP GE, 9090X T3, 9090X T4, 9090X T5, SB33, SB35, SB36, SB53, SB55, SB56, SB58, SB60, SB62, SB64, SB65, VL5060, VL5080, VL5090, VL530, VL540, VL550, VL570, VL600, VL6040, VL6050, VL6060, VL6070, VL6080, VL6090, VL610, VL620, VL630, VL640, VL660, VM3080, VM3080 AL, VM3090, VM340, VM370, VM4090, VM460, VN2090, VN260, VN300, VX680, VX7090

NEW HOLLAND-BRAUD COMPATIBLE

EDUARDO

REF.293A

TAMPA DE CORREIA VL / VM / VX / SB (600mm x 1,145 milímetros) 14 buracos

Comp. 944026645,,944009230

SB36, SB56, SB58, SB60, SB62, SB64, SB65, VL600, VL6040, VL6050, VL6060, VL6070, VL6080, VL6090, VL610, VL620, VL630, VL640, VL660, VM4090, VM460, VX680, VX7090

REF.293B

TAMPA DE CORREIA SB33 / 35/53/55 (450 milímetros) x1145mm um canal 10 buracos

Comp. 944010278

SB33, SB35, SB53, SB55

REF.293C

TAMPA DE CORREIA VL9000L/9000X (700 milímetros x 1,327 milímetros) 17 buracos,

Comp. 84193392

9030L, 9040L, 9050L H, 9050L L, 9060L, 9060L GE, 9060L H, 9060L SH, 9070L H, 9070L L, 9070L L T5, 9080L, 9080L GE, 9080L H, 9080L SH, 9090L, 9090L H, 9090L H T4, 9090L H T5, 9090L T3, 9090X, 9090X H, 9090X H T4, 9090X T3, 9090X T4, 9090X T5

REF.293D

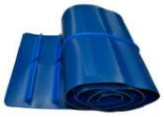

Cobertura da correia 9090 AZEITONA central (450mmx2.155mm) 10 buracos

Comp. 84321610

9090X O, 9090X O GE, 9090X O GE T3, 9090X O GE T4, 9090X O GE T5, 9090X O H T4, 9090X O T3, 9090X O T4, 9090X O T5, 9090X OP, 9090X OP GE, VX7090

REF.293E

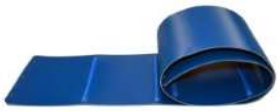

Cobertura da correia 9090 LATERAL AZEITONA (225 milímetros x 1,690 milímetro) 5 buracos

Comp. 84324465

9090X O, 9090X O H T4, 9090X O T3, 9090X O T4, 9090X O T5, 9090X OP, VX7090

REF.293G

ROLO DE FITA duas camadas (3,2 milímetros) 450mm x 1m

Comp. -

1214, 1620, 1620S, 2414, 2420, 2514, 2520, 2614, 2620, 2714, 2720, 7030L, 7030M, 7030M H, 8030L, 9030L, 9040L, 9040M, 9050L H, 9050L L, 9050L SH, 9060L, 9060L GE, 9060L H, 9060L SH, 9070L H, 9070L L, 9070L L T5, 9070L SH, 9070M, 9080L, 9080L GE, 9080L H, 9080L SH, 9080N H, 9080N L, 9090L, 9090L GE, 9090L H, 9090L H T4, 9090L H T5, 9090L SH, 9090L SH T4, 9090L SH T5, 9090L T3, 9090X, 9090X GE, 9090X GE T3, 9090X GE T4, 9090X GE T5, 9090X H, 9090X H H, 9090X H T4, 9090X O, 9090X O GE, 9090X O GE T3, 9090X O GE T4, 9090X O GE T5, 9090X O H T4, 9090X O T3, 9090X O T4, 9090X O T5, 9090X OP, 9090X OP GE, 9090X T3, 9090X T4, 9090X T5, SB33, SB35, SB36, SB52, SB53, SB54, SB55, SB56, SB58, SB60, SB62, SB64, SB65, VL5060, VL5080, VL5090, VL530, VL540, VL550, VL570, VL600, VL6040, VL6050, VL6060, VL6070, VL6080, VL6090, VL610, VL620, VL630, VL640, VL660, VM3080, VM3080 AL, VM3090, VM340, VM370, VM4090, VM460, VN2080, VN2090, VN240, VN260, VN300, VX680, VX7090

REF.293I

TAMPA DE CORREIA SB52 / 54 canais (450mmx1145mm) dois extremos INF.10 furos.

Comp. 913475510

1214, 1620, 1620S, 2414, 2420, 2514, 2520, 2614, 2620, 2714, 2720, SB52, SB54

REF.293N

TAMPA DE CORREIA ((600mm x 1.310) 14 buracos

Comp. 84358254

8030 L, 8030 L T5, 9060 L SH, 9080 L SH, 9090 L SH

REF.293K

ENTRADA

Comp. 944027604

SB56, SB58, SB60, SB62, SB64, VL600, VL6040, VL6050, VL6060, VL6070, VL6080, VL6090, VL610, VL620, VL630, VL640, VL660, VM4090, VM460, VX680, VX7090

REF.293L

ROLO DE FITA de 3 dobras (4,2 milímetros) 450mm x 1m

Comp. -

1214, 1620, 1620S, 2414, 2420, 2514, 2520, 2614, 2620, 2714, 2720, 7030L, 7030M, 7030M H, 8030L, 9030L, 9040L, 9040M, 9050L H, 9050L L, 9050L SH, 9060L, 9060L GE, 9060L H, 9060L SH, 9070L H, 9070L L, 9070L L T5, 9070L SH, 9070M, 9080L, 9080L GE, 9080L H, 9080L SH, 9080N H, 9080N L, 9090L, 9090L GE, 9090L H, 9090L H T4, 9090L H T5, 9090L SH, 9090L SH T4, 9090L SH T5, 9090L T3, 9090X, 9090X GE, 9090X GE T3, 9090X GE T4, 9090X GE T5, 9090X H, 9090X H H, 9090X H T4, 9090X O, 9090X O GE, 9090X O GE T3, 9090X O GE T4, 9090X O GE T5, 9090X O H T4, 9090X O T3, 9090X O T4, 9090X O T5, 9090X OP, 9090X OP GE, 9090X T3, 9090X T4, 9090X T5, SB33, SB35, SB36, SB52, SB53, SB54, SB55, SB56, SB58, SB60, SB62, SB64, SB65, VL5060, VL5080, VL5090, VL530, VL540, VL550, VL570, VL600, VL6040, VL6050, VL6060, VL6070, VL6080, VL6090, VL610, VL620, VL630, VL640, VL660, VM3080, VM3080 AL, VM3090, VM340, VM370, VM4090, VM460, VN2080, VN2090, VN240, VN260, VN300, VX680, VX7090

REF.293M

TAMPA DE CORREIA (700 milímetros x 1,135 milímetros) 17 buracos

Comp. 84193393

9040M, 9060L GE, 9070M, 9080L GE, 9090L GE, 9090X GE, 9090X H H

REF.294B

CORREIA CONJUNTA PARA 14 buracos (inoxidável)

Comp. 944005402

8030L, 9050L SH, 9060L SH, 9070L SH, 9080L SH, 9090L SH, 9090L SH T4, 9090L SH T5, SB36, SB56, SB58, SB60, SB62, SB64, SB65, VL600, VL6040, VL6050, VL6060, VL6070, VL6080, VL6090, VL610, VL620, VL630, VL640, VL660, VM4090, VM460, VX680, VX7090

REF.294C

CORREIA CONJUNTA PARA 10 buracos (inoxidável)

Comp. 944010278

SB33, SB35, SB53, SB55

REF.294D

CORREIA CONJUNTA PARA 17 buracos (inoxidável)

Comp. 47374088

9090X, 9090X H

REF.294E

CORREIA CONJUNTA PARA 5 furos (inoxidável)

Comp. 944035544

9090X O, 9090X O GE, 9090X O GE T3, 9090X O GE T4, 9090X O GE T5, 9090X O H T4, 9090X O T3, 9090X O T4, 9090X O T5, 9090X OP, 9090X OP GE, VN2080, VX7090

REF.294F

CORREIA TRANSPORTADORA DE FIXAÇÃO BAR 14 furos (alúmen)

Comp. 944005400

8030L, 9050L SH, 9060L SH, 9070L SH, 9080L SH, 9090L SH, 9090L SH T4, 9090L SH T5, SB36, SB56, SB58, SB60, SB62, SB64, SB65, VL600, VL6040, VL6050, VL6060, VL6070, VL6080, VL6090, VL610, VL620, VL630, VL640, VL660, VM4090, VM460, VX680, VX7090

REF.294G

CORREIA TRANSPORTADORA DE FIXAÇÃO BAR 10 buracos (alúmen)

Comp. 944010278

SB33, SB35, SB53, SB55

REF.294H

CORREIA TRANSPORTADORA DE FIXAÇÃO BAR 17 buracos (alúmen)

Comp. 84199474

9030L, 9040L, 9040M, 9050L H, 9050L L, 9060L, 9060L GE, 9060L H, 9070L H, 9070L L, 9070L L T5, 9070M, 9080L, 9080L GE, 9080L H, 9090L, 9090L GE, 9090L H, 9090L H T4, 9090L H T5, 9090L T3, 9090X, 9090X GE, 9090X GE T3, 9090X GE T4, 9090X GE T5, 9090X H, 9090X H H, 9090X H T4, 9090X T3, 9090X T4, 9090X T5

REF.294I

CORREIA TRANSPORTADORA DE FIXAÇÃO BAR 5 FUROS (alúmen)

Comp. 944035543

9090X O, 9090X O GE, 9090X O GE T3, 9090X O GE T4, 9090X O GE T5, 9090X O H T4, 9090X O T3, 9090X O T4, 9090X O T5, 9090X OP, 9090X OP GE, VN2080, VX7090

REF.502B

PARAFUSO + PORCA autoblocant UNIÃO CONVER CORREIA M5-20MM

Comp. 10978280+920008123

1214, 1620, 1620S, 2414, 2420, 2514, 2520, 2614, 2620, 2714, 2720, 7030L, 7030M, 7030M H, 8030L, 9030L, 9040L, 9040M, 9050L H, 9050L L, 9050L SH, 9060L, 9060L GE, 9060L H, 9060L SH, 9070L H, 9070L L, 9070L L T5, 9070L SH, 9070M, 9080L, 9080L GE, 9080L H, 9080L SH, 9080N H, 9080N L, 9090L, 9090L GE, 9090L H, **9090L H T4, 9090L H T5, 9090L SH, 9090L SH T4, 9090L SH T5, 9090L T3, 9090X, 9090X GE, 9090X GE T3,** 9090X GE T4, 9090X GE T5, 9090X H, 9090X H H, 9090X H T4, 9090X O, 9090X O GE, 9090X O GE T3, 9090X O GE T4, 9090X O GE T5, 9090X O H T4, 9090X O T3, 9090X O T4, 9090X O T5, 9090X OP, 9090X OP GE, 9090X T3, 9090X T4, 9090X T5, SB33, SB35, SB36, SB52, SB53, SB54, SB55, SB56, SB58, SB60, SB62, SB64, SB65, VL5060, VL5080, VL5090, VL530, VL540, VL550, VL570, VL600, VL6040, VL6050, VL6060, VL6070, VL6080, VL6090, VL610, VL620, VL630, VL640, VL660, VM3080, VM3080 AL, VM3090, VM340, VM370, VM4090, VM460, VN2080, VN2090, VN240, VN260, VN300, VX680, VX7090,0,2

Verifique a Ref. Antes.

Todas as marcas comerciais pertencem aos seus respectivos proprietários e seu uso é apenas para fins informativos.

WWW.EDUARDOREPUESTOSAGRICOLAS.COM

IVA não incluso

Transporte gratuito da UE para pedidos de 50

REF.295A

Rolo da unidade para 600 MM CORREIA

Comp. 944005403

SB36, SB56, SB58, SB60, SB62, SB64, SB65, VL600, VL6040, VL6050, VL6060, VL6070, VL6080, VL6090, VL610, VL620, VL630, VL640, VL660, VM4090, VM460, VX680, VX7090

REF.295B

ROLLER IDLE para 600 MM CORREIA

Comp. 944034674

VL600, VL6040, VL6050, VL6060, VL6070, VL6080, VL6090, VL610, VL620, VL630, VL640, VL660, VM4090, VM460, VX680, VX7090

REF.295C

Rolo da unidade para 450 MM CORREIA

Comp. 944010279

7030M, 7030M H, 8030L, 9090X O, 9090X O GE, 9090X O GE T3, 9090X O GE T4, 9090X O GE T5, 9090X O H T4, 9090X O T3, 9090X O T4, 9090X O T5, 9090X OP, 9090X OP GE, SB33, SB35, SB53, SB55, SB65, VL5060, VL5080, VL5090, VL530, VL540, VL550, VL570, VM3080, VM3080 AL, VM3090, VM340, VM370, VN2080, VN2090, VN300, VX7090

REF.295P

ROLLER IDLE para 450 MM CORREIA

Comp. 944034672

7030M, 7030M H, 8030L, 9060L GE, 9080L GE, 9090L GE, 9090X GE, 9090X O, 9090X O GE, 9090X O GE T3, 9090X O GE T4, 9090X O GE T5, 9090X O H T4, 9090X O T3, 9090X O T4, 9090X O T5, 9090X OP, 9090X OP GE, VL5060, VL5080, VL5090, VL530, VL540, VL550, VL570, VM3080, VM3080 AL, VM3090, VM340, VM370, VN2080, VN2090, VN300, VX7090

REF.295Q

Rolo da unidade para 700 MM CORREIA

Comp. 84193395

9030L, 9040L, 9040M, 9050L H, 9050L L, 9060L, 9060L GE, 9060L H, 9070L H, 9070L L, 9070L L T5, 9070M, 9080L, 9080L GE, 9080L H, 9090L, 9090L GE, 9090L H, 9090L H T4, 9090L H T5, 9090L T3, 9090X, 9090X GE, 9090X GE T3, 9090X GE T4, 9090X GE T5, 9090X H, 9090X H H, 9090X H T4, 9090X T3, 9090X T4, 9090X T5

REF.295R

ROLLER IDLE para 700 MM CORREIA

Comp. 84193394

9030L, 9040L, 9040M, 9050L H, 9050L L, 9060L, 9060L GE, 9060L H, 9070L H, 9070L L, 9070L L T5, 9070M, 9080L, 9080L GE, 9080L H, 9090L, 9090L GE, 9090L H, 9090L H T4, 9090L H T5, 9090L T3, 9090X, 9090X GE, 9090X GE T3, 9090X GE T4, 9090X GE T5, 9090X H, 9090X H H, 9090X H T4, 9090X T3, 9090X T4, 9090X T5

REF.295S

Rolo da unidade para 225 MM CORREIA

Comp. 944035528

9090X O, 9090X O GE T3, 9090X O H T4, 9090X O T3, 9090X O T4, 9090X O T5, 9090X OP, VN2080, VX7090

REF.295T

ROLLER IDLE para 225 MM CORREIA

Comp. 84343365

9090X O, 9090X O GE, 9090X O GE T3, 9090X O GE T4, 9090X O GE T5, 9090X O H T4, 9090X O T3, 9090X O T4, 9090X O T5, 9090X OP, 9090X OP GE, VX7090

REF.295D

UNIDADE rolo para 450 MM CORREIA, modelos SB52 / 54

Comp. 913308630

1214, 1620, 1620S, 2414, 2420, 2514, 2520, 2614, 2620, 2714, 2720, SB52, SB54

REF.547A

RUBBER REGULAMENTO DE LIMPEZA

Comp. 944005421 / 84196271

SB36, SB56, SB58, SB60, SB62, SB64, SB65, VL600, VL6040, VL6050, VL6060, VL6070, VL6080, VL6090, VL610, VL620, VL630, VL640, VL660, VM4090, VM460, VX680, VX7090

REF.547B

BORRACHA BIB (SB64,60,58,65)

Comp. 944005420

SB33, SB35, SB36, SB53, SB55, SB56, SB58, SB60, SB62, SB64, SB65, VN240, VN260

REF.556A

ROLO DE CENTRAL DE LIMPEZA

Comp. 944005399

7030L, 7030M, 7030M H, 8030L, 9030L, 9040L, 9040M, 9050L H, 9050L L, 9050L SH, 9060L, 9060L GE, 9060L H, 9060L SH, 9070L H, 9070L L, 9070L L T5, 9070L SH, 9070M, 9080L, 9080L GE, 9080L H, 9080L SH, 9080N H, 9080N L, 9090L, 9090L GE, 9090L H, 9090L H T4, 9090L H T5, 9090L SH, 9090L SH T4, 9090L SH T5, 9090L T3, 9090X, 9090X GE, 9090X GE T3, 9090X GE T4, 9090X GE T5, 9090X H, 9090X H H, 9090X H T4, 9090X T3, 9090X T4, 9090X T5, SB33, SB35, SB36, SB53, SB55, SB56, SB58, SB60, SB62, SB64, SB65, VL5060, VL5080, VL5090, VL530, VL540, VL550, VL570, VL600, VL6040, VL6050, VL6060, VL6070, VL6080, VL6090, VL610, VL620, VL630, VL640, VL660, VM3080, VM3080 AL, VM3090, VM340, VM370, VM4090, VM460, VN2080, VN2090, VN240, VN260, VN300, VX680, VX7090

REF.557A

sinfín REDUTOR

Comp. 84248099

VL6040

REF.570A

Ø25 MM rolamento de esferas COM ANEL DE CROSS CORREIA (

Comp. 920019044

1214, 1620, 1620S, 2414, 2420, 2514, 2520, 2614, 2620, 2714, 2720, 7030L, 7030M, 7030M H, 8030L, 9030L, 9040L, 9040M, 9050L H, 9050L L, 9050L SH, 9060L, 9060L GE, 9060L H, 9060L SH, 9070L H, 9070L L, 9070L L T5, 9070L SH, 9070M, 9080L, 9080L GE, 9080L H, 9080L SH, 9080N H, 9080N L, 9090L, 9090L GE, 9090L H, 9090L H T4, 9090L H T5, 9090L SH, 9090L SH T4, 9090L SH T5, 9090L T3, 9090X, 9090X GE, 9090X GE T3, 9090X GE T4, 9090X GE T5, 9090X H, 9090X H H, 9090X H T4, 9090X O GE, 9090X O GE T3, 9090X O GE T4, 9090X O GE T5, 9090X OP GE, 9090X T3, 9090X T4, 9090X T5, SB33, SB35, SB36, SB52, SB53, SB54, SB55, SB56, SB58, SB60, SB62, SB64, SB65, T140, T240, TB10, TB15, VL5060, VL5080, VL5090, VL530, VL540, VL550, VL570, VL600, VL6040, VL6050, VL6060, VL6070, VL6080, VL6090, VL610, VL620, VL630, VL640, VL660, VM3080, VM3080 AL, VM3090, VM340, VM370, VM4090, VM460, VN2080, VN2090, VN240, VN260, VN300, VX680, VX7090

REF.570L

Ø20x14mm rolamento de esferas desengaceiro

Comp. 84287484

7030M, 7030M H, 8030L, 9040L, 9040M, 9060L, 9060L GE, 9060L H, 9060L SH, 9080L, 9080L GE, 9080L H, 9080L SH, 9090L, 9090L GE, 9090L H, 9090L SH, 9090X, 9090X GE, 9090X H, 9090X H H, SB33, SB35, SB36, SB52, SB53, SB54, SB55, SB56, SB58, SB60, SB62, SB64, SB65, VL5060, VL5080, VL5090, VL530, VL540, VL550, VL570, VL600, VL6040, VL6050, VL6060, VL6070, VL6080, VL6090, VL610, VL620, VL630, VL640, VL660, VM3080, VM3080 AL, VM3090, VM340, VM370, VM4090, VM460, VN2090, VN300, VX680, VX7090

REF.570M

Ø30x18mm rolamento de esferas Sigillante Supporto Motore

Comp. 84287487

7030M, 7030M H, 8030L, 9040L, 9040M, 9060L, 9060L GE, 9060L H, 9060L SH, 9080L, 9080L GE, 9080L H, 9080L SH, 9090L, 9090L GE, 9090L H, 9090L SH, 9090X, 9090X GE, 9090X H, 9090X H H, SB33, SB35, SB36, SB52, SB53, SB54, SB55, SB56, SB58, SB60, SB62, SB64, SB65, VL5060, VL5080, VL5090, VL530, VL540, VL550, VL570, VL600, VL6040, VL6050, VL6060, VL6070, VL6080, VL6090, VL610, VL620, VL630, VL640, VL660, VM3080, VM3080 AL, VM3090, VM340, VM370, VM4090, VM460, VN2090, VN300, VX680, VX7090

REF.579A

PROTETORES DE AÇO

Comp. 920019046

7030L, 7030M, 7030M H, 8030L, 9030L, 9040L, 9040M, 9050L H, 9050L L, 9050L SH, 9060L, 9060L GE, 9060L H, 9060L SH, 9070L H, 9070L L, 9070L L T5, 9070L SH, 9070M, 9080L, 9080L GE, 9080L H, 9080L SH, 9080N H, 9080N L, 9090L, 9090L GE, 9090L H, 9090L H T4, 9090L H T5, 9090L SH, 9090L SH T4, 9090L SH T5, 9090L T3, **9090X, 9090X GE, 9090X GE T3, 9090X GE T4, 9090X GE T5, 9090X H, 9090X H H, 9090X H T4, 9090X O,** 9090X O GE T3, 9090X O T3, 9090X O T4, 9090X OP, 9090X T3, 9090X T4, 9090X T5, SB33, SB35, SB53, SB55, SB65, T140, T240, VL5060, VL5080, VL5090, VL530, VL540, VL550, VL570, VL600, VL6040, VL6050, VL6060, VL6070, VL6080, VL6090, VL610, VL620, VL630, VL640, VL660, VM3080, VM3080 AL, VM3090, VM340, VM370, VM4090, VM460, VN2080, VN2090, VN300, VX680, VX7090

REF.721A

Escova para Cachimbo

Comp. 944031640

9090X GE T3, 9090X GE T4, 9090X GE T5, SB33, SB35, SB53, SB55, VL5060, VL5080, VL5090, VL530, VL540, VL550, VL570, VL600, VL6040, VL6050, VL6060, VL6070, VL6080, VL6090, VL610, VL620, VL630, VL640, VL660, VM3080, VM3090, VM340, VM370, VM4090, VM460, VX7090

REF.727A

PINHÃO 25 dentes

Comp. 87532045,9440002

7030L, 9030L, 9050L L, 9070L L, 9070L L T5, 9090L T3, 9090X, 9090X GE, 9090X GE T3, 9090X GE T4, 9090X GE T5, 9090X H, 9090X H H, 9090X H T4, 9090X T3, 9090X T4, 9090X T5, VL5060, VM3080, VX7090

REF.728A

Electroválvula SOLENOID

Comp. 920018591

SB33, SB35, SB36, SB52, SB53, SB54, SB55, SB56, SB58, SB60, SB62, SB64, SB65, TB10, TB15

NEW HOLLAND-BRAUD COMPATIBLE

EDUARDO

REF.213B

DEDO Desengaçador GRANDE

Comp. 944027438

9030L, 9040L, 9040M, 9050L H, 9050L L, 9050L SH, 9060L, 9060L GE, 9060L H, 9060L SH, 9070L H, 9070L L, 9070L L T5, 9070L SH, 9070M, 9080L, 9080L GE, 9080L H, 9080L SH, 9080N H, 9080N L, 9090L, 9090L GE, 9090L H, 9090L H T4, 9090L H T5, 9090L SH T4, 9090L SH T5, 9090L T3, 9090X, 9090X GE T3, 9090X GE T4, 9090X GE T5, 9090X H, 9090X H H, 9090X H T4, 9090X T3, 9090X T4, 9090X T5, SB36, SB56, SB58, SB60, SB62, SB64, SB65, VL600, VL6040, VL6050, VL6060, VL6070, VL6080, VL6090, VL610, VL620, VL630, VL640, VL660, VM4090, VM460, VX680, VX7090

REF.213D

PADRÃO Desengaçador DEDO

Comp. 87681134

7030L, 7030M, 7030M H, 8030L, 9030L, 9040L, 9040M, 9050L H, 9050L L, 9050L SH, 9060L, 9060L GE, 9060L H, 9060L SH, 9070L H, 9070L L, 9070L L T5, 9070L SH, 9070M, 9080L, 9080L GE, 9080L H, 9080L SH, 9080N H, 9080N L, 9090L, 9090L GE, 9090L H, 9090L H T4, 9090L H T5, 9090L SH T4, 9090L SH T5, 9090L T3, 9090X, 9090X GE T3, 9090X GE T4, 9090X GE T5, 9090X H, 9090X H H, 9090X H T4, 9090X T3, 9090X T4, 9090X T5, SB33, SB35, SB53, SB55, VL5060, VL5080, VL5090, VL530, VL540, VL550, VL570, VM3080, VM3080 AL, VM3090, VM340, VM370, VN2080, VN2090, VN300

REF.214B

CORREIA PIN (rosa)

Comp. -

9030L, 9040L, 9040M, 9050L H, 9050L L, 9060L, 9060L GE, 9060L H, 9070L H, 9070L L, 9070L L T5, 9070M, 9080L, 9080L GE, 9080L H, 9090L, 9090L GE, 9090L H, 9090L H T4, 9090L H T5, 9090L T3, 9090X, 9090X GE T3, 9090X GE T4, 9090X GE T5, 9090X H, 9090X H H, 9090X H T4, 9090X T3, 9090X T4, 9090X T5, VL5060, VL5080, VL5090, VM3080, VM3090, VX7090

REF.214C

CORREIA PIN (ROSA) 0,2mm GROSSO

Comp. 944027440

9030L, 9040L, 9040M, 9050L H, 9050L L, 9060L, 9060L GE, 9060L H, 9070L H, 9070L L, 9070L L T5, 9070M, 9080L, 9080L GE, 9080L H, 9090L, 9090L GE, 9090L H, 9090L H T4, 9090L H T5, 9090L T3, 9090X, 9090X GE T3, 9090X GE T4, 9090X GE T5, 9090X H, 9090X H H, 9090X H T4, 9090X T3, 9090X T4, 9090X T5, VL5060, VL5080, VL5090, VM3080, VM3090, VX7090

REF.295Z

TITULAR DEDO Desengaçador

Comp. 944027439

7030L, 7030M, 7030M H, 8030L, 9030L, 9040L, 9040M, 9050L H, 9050L L, 9050L SH, 9060L, 9060L GE, 9060L H, 9060L SH, 9070L H, 9070L L, 9070L L T5, 9070L SH, 9070M, 9080L, 9080L GE, 9080L H, 9080L SH, 9080N H, 9080N L, 9090L, 9090L GE, 9090L H, 9090L H T4, 9090L H T5, 9090L SH T4, 9090L SH T5, 9090L T3, 9090X, 9090X GE T3, 9090X GE T4, 9090X GE T5, 9090X H, 9090X H H, 9090X H T4, 9090X T3, 9090X T4, 9090X T5, SB33, SB35, SB36, SB53, SB55, SB56, SB58, SB60, SB62, SB64, VL5060, VL5080, VL5090, VL530, VL540, VL550, VL570, VL600, VL6040, VL6050, VL6060, VL6070, VL6080, VL6090, VL610, VL620, VL630, VL640, VL660, VM3080, VM3080 AL, VM3090, VM340, VM370, VM4090, VM460, VN2080, VN2090, VN300, VX680, VX7090

REF.296A

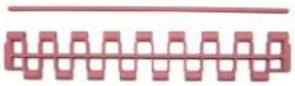

CORREIA DE MALHA + PIN (rosa)

Comp. 944027670, 944027440

9030L, 9040L, 9040M, 9050L H, 9050L L, 9060L, 9060L GE, 9060L H, 9060L SH, 9070L H, 9070L L, 9070L L T5, 9070M, 9080L, 9080L GE, 9080L H, 9080L SH, 9090L, 9090L GE, 9090L H, 9090L H T4, 9090L H T5, 9090L T3, 9090X, 9090X GE T3, 9090X GE T4, 9090X GE T5, 9090X H, 9090X H H, 9090X H T4, 9090X O GE, 9090X O GE T4, 9090X O H T4, 9090X O T4, 9090X OP, 9090X OP GE, 9090X T3, 9090X T4, 9090X T5, SB33, SB35, SB36, SB53, SB55, SB56, SB58, SB60, SB62, SB64, VL5060, VL5080, VL5090, VL530, VL540, VL550, VL570, VL600, VL6040, VL6050, VL6060, VL6070, VL6080, VL6090, VL610, VL620, VL630, VL640, VL660, VM3080, VM3080 AL, VM3090, VM340, VM370, VM4090, VM460, VN2080, VN2090, VX680, VX7090

REF.296C

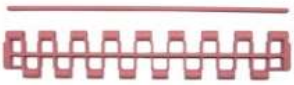

CORREIA DE MALHA + PIN (ROSA) COMPLETO VL / VX 92 CONJUNTOS

Comp. 944031438

9030L, 9040L, 9040M, 9050L H, 9050L L, 9060L, 9060L GE, 9060L H, 9070L H, 9070L L, 9070L L T5, 9070M, 9080L, 9080L GE, 9080L H, 9090L, 9090L GE, 9090L H, 9090L H T4, 9090L H T5, 9090X, 9090X GE T4, 9090X H, 9090X H H, 9090X H T4, 9090X O GE, 9090X O GE T4, 9090X O H T4, 9090X O T4, 9090X OP, 9090X OP GE, 9090X T3, 9090X T4, 9090X T5, SB33, SB35, SB36, SB53, SB55, SB56, SB58, SB60, SB62, SB64, VL5060, VL5080, VL5090, VL530, VL540, VL550, VL570, VL600, VL6040, VL6050, VL6060, VL6070, VL6080, VL6090, VL610, VL620, VL630, VL640, VL660, VM3080, VM3080 AL, VM3090, VM340, VM370, VM4090, VM460, VN2080, VN2090, VX680, VX7090

REF.296D

CORREIA DE MALHA BRANCO MAIS ABERTO + PIN

Comp. 47859604

9050L H, 9090L H T4, 9070L H, 9070L L, 9050L L, 9070M, 9090X GE T4, 9090X T4, 9090X HEAD T4, 9090X GE T5, 9090X T5, 9030L, 9090L H T5, 9090X GE T3, 9090X T3, 9090L T3, 9070L L T5, 9070M T5, 9030L T5, 9070L H T5, 9050L H T5, 9050L L T5

REF.296E

CORREIA DE MALHA AZUL MAIS PRÓXIMO + PIN

Comp. 51613223

9050L H, 9090L H T4, 9070L H, 9070L L, 9050L L, 9070M, 9090X GE T5, 9090X T5, 9030L, 9090L H T5, 9090X GE T3, 9090X T3, 9090L T3, 9070L L T5, 9070M T5, 9030L T5, 9070L H T5, 9050L H T5, 9050L L T5

REF.511A

CADEIA DE TRANSMISSÃO 60H 79 PASSOS

Comp. 920019483, 920017691

9040L, 9060L, 9090L H, 9090X, 9090X GE, 9090X GE T3, 9090X GE T4, 9090X GE T5, 9090X H, 9090X H H, 9090X H T4, 9090X T3, 9090X T4, 9090X T5, SB65, VL5060, VL530, VL540, VL600, VL6040, VM3080, VM340, VX7090

REF.511B

CADEIA UNIÃO DE TRANSMISSÃO 60H

Comp. -

9040L, 9060L, 9090L H, 9090X, 9090X GE, 9090X GE T3, 9090X GE T4, 9090X GE T5, 9090X H, 9090X H H, 9090X H T4, 9090X T3, 9090X T4, 9090X T5, SB65, VL5060, VL530, VL540, VL600, VL6040, VM3080, VM340, VX7090

REF.511C

HALF TRANSM. 60H PASSO HALF

Comp. -

9040L, 9060L, 9090L H, 9090X, 9090X GE, 9090X GE T3, 9090X GE T4, 9090X GE T5, 9090X H, 9090X H H, 9090X H T4, 9090X T3, 9090X T4, 9090X T5, SB65, VL5060, VL530, VL540, VL600, VL6040, VM3080, VM340, VX7090,7,7

REF.548A

anel de segurança

Comp. 944000016

1620, 1620S, 2420, 2520, 2620, 2720, SB33, SB35, SB36, SB52, SB53, SB54, SB55, SB56, SB58, SB60, SB62, SB64, SB65, VL550, VL570, VL610, VL620, VL630, VL640, VL660, VM370, VM460, VX680

REF.549A

RUBBER STOP (700gr)

Comp. 920017480

1620, 1620S, 2420, 2520, 2620, 2720, SB36, SB52, SB54, SB56, SB58, SB60, SB62, SB64, SB65, VL5080, VL5090, VL550, VL570, VL600, VL6040, VL6050, VL6060, VL6070, VL6080, VL6090, VL610, VL620, VL630, VL640, VL660, VM3080 AL, VM3090, VM370, VM4090, VM460, VX680, VX7090

REF.549B

ANTI-VIBRAÇÃO INSULATOR PARA SENSOR ARM

Comp. 920019360

7030L, 8030L, 9030L, 9040L, 9040M, 9050L H, 9050L L, 9050L SH, 9060L, 9060L GE, 9060L H, 9060L SH, 9070L H, 9070L L, 9070L L T5, 9070L SH, 9070M, 9080L, 9080L GE, 9080L H, 9080L SH, 9090L, 9090L GE, 9090L H, 9090L H T4, 9090L H T5, 9090L SH, 9090L SH T4, 9090L SH T5, 9090L T3, 9090X, 9090X GE, 9090X GE T3, 9090X GE T4, 9090X GE T5, 9090X H, 9090X H H, 9090X H T4, 9090X T3, 9090X T4, 9090X T5, SB33, SB35, SB36, SB53, SB55, SB56, SB58, SB60, SB62, SB64, SB65, VL530, VL540, VL550, VL570, VL600, VL610, VL620, VL630, VL640, VL660, VM340, VM370, VM460, VX680, VX7090

REF.549C

PARAR GOMME (700gr)

Comp. 920019016

SB33, SB35, SB36, SB53, SB55, SB56, SB58, SB60, SB62, SB64, VL5060, VL530, VL540, VL600, VL6040, VM3080, VM340, VN2090, VN300

REF.549D

RUBBER STOP (700gr)

Comp. 920094157

1214, 1620, 1620S, SB33, SB35, SB53, SB55, VL5060, VL530, VL540, VM3080, VM340, VN2090, VN300

REF.550A*

TAMPA SUPERIOR

Comp. 944000412

1620, 1620S, 2420, 2520, 2620, 2720, SB33, SB35, SB36, SB52, SB53, SB54, SB55, SB56, SB58, SB60, SB62, SB64, SB65, VL5060, VL5080, VL5090, VL530, VL540, VL550, VL570, VL600, VL6040, VL6050, VL6060, VL6070, VL6080, VL6090, VL610, VL620, VL630, VL640, VL660, VM3080, VM3080 AL, VM3090, VM340, VM370, VM4090, VM460, VN2090, VN300, VX680, VX7090

REF.551A*

INFERIOR PAC

Comp. 944000413

1620, 1620S, 2420, 2520, 2620, 2720, SB36, SB52, SB54, SB56, SB58, SB60, SB62, SB64, SB65, VL5080, VL5090, VL550, VL570, VL600, VL6040, VL6050, VL6060, VL6070, VL6080, VL6090, VL610, VL620, VL630, VL640, VL660, VM3080 AL, VM3090, VM370, VM4090, VM460, VX680, VX7090

REF.551B*

INFERIOR PAC

Comp. 944000414

1620, 1620S, SB33, SB35, SB36, SB53, SB55, SB56, SB58, SB60, SB62, SB64, VL5060, VL530, VL540, VL600, VL6040, VM3080, VM340, VN2090, VN300

Verifique a Ref. Antes.

Todas as marcas comerciais pertencem aos seus respectivos proprietários e seu uso é apenas para fins informativos.

WWW.EDUARDOREPUESTOSAGRICOLAS.COM

IVA não incluso

Transporte gratuito da UE para pedidos de 50

NEW HOLLAND-BRAUD COMPATIBLE

EDUARDO

REF.555A

CONDUÇÃO dentes para Desengaçador esteira rolante. NOVA VERSÃO (BRANCO)

Comp. 87610362, 84484443

9040L, 9040M, 9060L, 9060L GE, 9060L H, 9080L, 9080L GE, 9080L H, 9090L, 9090L GE, 9090L H, 9090X, 9090X H, 9090X H H, SB33, SB35, SB36, SB53, SB55, SB56, SB58, SB60, SB62, SB64, VL5060, VL5080, VL5090, VL530, VL540, VL550, VL570, VL600, VL6040, VL6050, VL6060, VL6070, VL6080, VL6090, VL610, VL620, VL630, VL640, VL660, VM3080, VM3080 AL, VM3090, VM340, VM370, VM4090, VM460, VN2080, VN2090, VN300, VX680, VX7090

REF.555C

CONDUÇÃO dentes para Desengaçador esteira rolante CORREIA DE MALHA AZUL MAIS PRÓXIMO

Comp. 51613526

7030L ,7030M ,8030L ,9050L H ,9090L H T4 ,9070L H ,9070L L ,9050L L ,9070M ,9080N HEAD ,9080N H ,9080N L ,9030L ,9090L H T5 ,9090L SH T4 ,9090L T3 ,9090L SH T5 ,7030M HEAD ,9050L SH ,9070L SH ,9070L L T5 ,9050L SH T5 ,9080N L T5 ,9070M T5 ,9030L T5 ,9070L H T5 ,9070L SH T5 ,9050L H T5 ,9050L L T5 ,8030L T5 ,9080N H T5

REF.580A

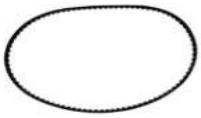

Exibidor desengaçador

Comp. 920019616

9030L, 9040L, 9040M, 9050L H, 9050L L, 9050L SH, 9060L, 9060L GE, 9060L H, 9060L SH, 9070L H, 9070L L, 9070L L T5, 9070L SH, 9070M, 9080L, 9080L GE, 9080L H, 9080L SH, 9080N H, 9080N L, 9090L, 9090L GE, 9090L H, 9090L H T4, 9090L H T5, 9090L SH, 9090L SH T4, 9090L SH T5, 9090L T3, 9090X, 9090X GE, 9090X H, 9090X H H, 9090X H T4, 9090X O, 9090X O GE, 9090X T3, 9090X T4, 9090X T5, SB33, SB35, SB36, SB53, SB55, SB56, SB58, SB60, SB62, SB64, SB65, VL600, VL6040, VL6050, VL6060, VL6070, VL6080, VL6090, VL610, VL620, VL630, VL640, VL660, VM4090, VM460, VX680, VX7090

REF.570B

Coluna dianteira nº11 BEARING

Comp. 920092458

1214, 1620, 1620S, 2420, 2520, 2620, 2720, 7030M, 7030M H, 8030L, 9040L, 9040M, 9060L, 9060L GE, 9060L H, 9060L SH, 9080L, 9080L GE, 9080L H, 9080L SH, 9090L, 9090L GE, 9090L H, 9090L SH, 9090X, 9090X GE, 9090X H, 9090X H H, SB33, SB35, SB36, SB52, SB53, SB54, SB55, SB56, SB58, SB60, SB62, SB64, SB65, VL5060, VL5080, VL5090, VL530, VL540, VL550, VL570, VL600, VL6040, VL6050, VL6060, VL6070, VL6080, VL6090, VL610, VL620, VL630, VL640, VL660, VM3080, VM3080 AL, VM3090, VM340, VM370, VM4090, VM460, VN2090, VN300, VX680, VX7090

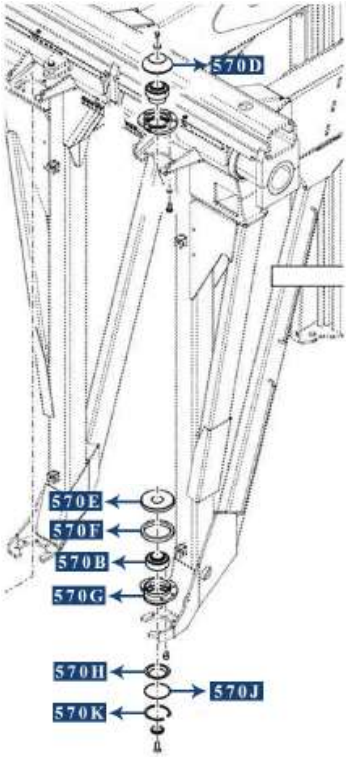

REF.570D*

PLUG WASHER nº6

Comp. 913355562

1214, 1620, 1620S, 2420, 2520, 2620, 2720, 9040L, 9040M, 9060L, 9060L GE, 9060L H, 9060L SH, 9080L, 9080L GE, 9080L H, 9080L SH, 9090L, 9090L GE, 9090L H, 9090L SH, 9090X, 9090X GE, 9090X H, 9090X H H, SB33, SB35, SB36, SB52, SB53, SB54, SB55, SB56, SB58, SB60, SB62, SB64, SB65, VL5060, VL5080, VL5090, VL530, VL540, VL550, VL570, VL600, VL6040, VL6050, VL6060, VL6070, VL6080, VL6090, VL610, VL620, VL630, VL640, VL660, VM3080, VM3080 AL, VM3090, VM340, VM370, VM4090, VM460, VN2090, VN300, VX680, VX7090

REF.570E*

HERMETIC WASHER nº13

Comp. 944007707

9040L, 9040M, 9060L, 9060L GE, 9060L H, 9060L SH, 9080L, 9080L GE, 9080L H, 9080L SH, 9090L, 9090L GE, 9090L H, 9090L SH, 9090X, 9090X GE, 9090X H, 9090X H H, SB33, SB35, SB36, SB52, SB53, SB54, SB55, SB56, SB58, SB60, SB62, SB64, SB65, VL5060, VL5080, VL5090, VL530, VL540, VL550, VL570, VL600, VL6040, VL6050, VL6060, VL6070, VL6080, VL6090, VL610, VL620, VL630, VL640, VL660, VM3080, VM3080 AL, VM3090, VM340, VM370, VM4090, VM460, VN2090, VN300, VX680, VX7090

REF.570F*

Arruela nº8

Comp. 920018497

7030M, 7030M H, 8030L, 9040L, 9040M, 9060L, 9060L GE, 9060L H, 9060L SH, 9080L, 9080L GE, 9080L H, 9080L SH, 9090L, 9090L GE, 9090L H, 9090L SH, 9090X, 9090X GE, 9090X H, 9090X H H, SB33, SB35, SB36, SB52, SB53, SB54, SB55, SB56, SB58, SB60, SB62, SB64, SB65, VL5060, VL5080, VL5090, VL530, VL540, VL550, VL570, VL600, VL6040, VL6050, VL6060, VL6070, VL6080, VL6090, VL610, VL620, VL630, VL640, VL660, VM3080, VM3080 AL, VM3090, VM340, VM370, VM4090, VM460, VN2090, VN300, VX680, VX7090

REF.570G*

LEVANDO nº16 APOIO

Comp. 944028987

7030M, 7030M H, 8030L, 9040L, 9040M, 9060L, 9060L GE, 9060L H, 9060L SH, 9080L, 9080L GE, 9080L H, 9080L SH, 9090L, 9090L GE, 9090L H, 9090L SH, 9090X, 9090X GE, 9090X H, 9090X H H, VL5060, VL5080, VL5090, VL530, VL540, VL550, VL570, VL600, VL6040, VL6050, VL6060, VL6070, VL6080, VL6090, VL610, VL620, VL630, VL640, VL660, VM3080, VM3080 AL, VM3090, VM340, VM370, VM4090, VM460, VN2090, VN300, VX680, VX7090

REF.570H*

PLUG WASHER nº14

Comp. 944007708

9040L, 9040M, 9060L, 9060L GE, 9060L H, 9060L SH, 9080L, 9080L GE, 9080L H, 9080L SH, 9090L, 9090L GE, 9090L H, 9090L SH, 9090X, 9090X GE, 9090X H, 9090X H H, SB33, SB35, SB36, SB52, SB53, SB54, SB55, SB56, SB58, SB60, SB62, SB64, SB65, VL5060, VL5080, VL5090, VL530, VL540, VL550, VL570, VL600, VL6040, VL6050, VL6060, VL6070, VL6080, VL6090, VL610, VL620, VL630, VL640, VL660, VM3080, VM3080 AL, VM3090, VM340, VM370, VM4090, VM460, VN2090, VN300, VX680, VX7090

REF.570J*

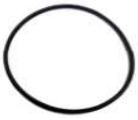

ANEL Nº9

Comp. 920018498

7030M, 7030M H, 8030L, 9040L, 9040M, 9060L, 9060L GE, 9060L H, 9060L SH, 9080L, 9080L GE, 9080L H, 9080L SH, 9090L, 9090L GE, 9090L H, 9090L SH, 9090X, 9090X GE, 9090X H, 9090X H H, SB33, SB35, SB36, SB52, SB53, SB54, SB55, SB56, SB58, SB60, SB62, SB64, SB65, VL5060, VL5080, VL5090, VL530, VL540, VL550, VL570, VL600, VL6040, VL6050, VL6060, VL6070, VL6080, VL6090, VL610, VL620, VL630, VL640, VL660, VM3080, VM3080 AL, VM3090, VM340, VM370, VM4090, VM460, VN2090, VN300, VX680, VX7090

REF.570K*

nº10 a arruela de retenção

Comp. 920018499

7030M, 7030M H, 8030L, 9040L, 9040M, 9060L, 9060L GE, 9060L H, 9060L SH, 9080L, 9080L GE, 9080L H, 9080L SH, 9090L, 9090L GE, 9090L H, 9090L SH, 9090X, 9090X GE, 9090X H, 9090X H H, SB33, SB35, SB36, SB52, SB53, SB54, SB55, SB56, SB58, SB60, SB62, SB64, SB65, VL5060, VL5080, VL5090, VL530, VL540, VL550, VL570, VL600, VL6040, VL6050, VL6060, VL6070, VL6080, VL6090, VL610, VL620, VL630, VL640, VL660, VM3080, VM3080 AL, VM3090, VM340, VM370, VM4090, VM460, VN2090, VN300, VX680, VX7090

REF.570N

ROLAMENTO DE COLUNA Ø60x110x28 OSCILANDO 2 FIOS ESFÉRICOS

Comp. 47499485 (428162)

7030M, 7030M H, 8030L, 9040L, 9040M, 9060L, 9060L GE, 9060L H, 9060L SH, 9080L, 9080L GE, 9080L H, 9080L SH, 9090L, 9090L GE, 9090L H, 9090L SH, 9090X, 9090X GE, 9090X H, 9090X H H, SB33, SB35, SB36, SB52, SB53, SB54, SB55, SB56, SB58, SB60, SB62, SB64, SB65, VL5060, VL5080, VL5090, VL530, VL540, VL550, VL570, VL600, VL6040, VL6050, VL6060, VL6070, VL6080, VL6090, VL610, VL620, VL630, VL640, VL660, VM3080, VM3080 AL

REF.570P

ROLAMENTO DE COLUNA Ø40x80x23 OSCILANDO 2 FIOS ESFÉRICOS

Comp. 87516228

7030M, 7030M H, 8030L, 9040L, 9040M, 9060L, 9060L GE, 9060L H, 9060L SH, 9080L, 9080L GE, 9080L H, 9080L SH, 9090L, 9090L GE, 9090L H, 9090L SH, 9090X, 9090X GE, 9090X H, 9090X H H, SB33, SB35, SB36, SB52, SB53, SB54, SB55, SB56, SB58, SB60, SB62, SB64, SB65, VL5060, VL5080, VL5090, VL530, VL540, VL550, VL570, VL600, VL6040, VL6050, VL6060, VL6070, VL6080, VL6090, VL610, VL620, VL630, VL640, VL660, VM3080, VM3080 AL

REF.730A

PINTURA AZUL (SPRAY 0,4L)

Comp. 9973524

7030L, 7030M, 8030L, 9040L, 9040M, 9050L H, 9050L L, 9050L SH, 9060L, 9060L GE, 9060L H, 9060L SH, 9070L H, 9070L L, 9070L SH, 9080L, 9080L GE, 9080L H, 9080L SH, 9080N H, 9080N L, 9090L, 9090L GE, 9090L H, 9090L H T4, 9090L SH, 9090L SH T4, 9090X, 9090X GE, 9090X GE T4, 9090X H, 9090X H T4, 9090X O, 9090X O GE, 9090X O GE T4, 9090X O T4, 9090X T4, VX7090

REF.730B

ESCURO CINZA DE PINTURA (0,4L SPRAY)

Comp. 9973528

7030L, 7030M, 9050L SH, 9060L, 9060L GE, 9060L H, 9060L SH, 9070L H, 9070L L, 9070L SH, 9080L, 9080L GE, 9080L H, 9080L SH, 9080N H, 9080N L, 9090L, 9090L GE, 9090L H, 9090L H T4, 9090L SH, 9090L SH T4, 9090X, 9090X GE, 9090X GE T4, 9090X H, 9090X H T4, 9090X O, 9090X O GE, 9090X O GE T4, 9090X O T4, 9090X T4, VX7090

REF.731A

SILENCIOSO BLOCO 2 PARAFUSO

Comp. 920094153

1214, 1620, 1620S, 2414, 2420, 2514, 2520, 2614, 2620, 2714, 2720, 9090X O, 9090X O GE, 9090X O GE T3, 9090X O GE T4, 9090X O GE T5, 9090X O H T4, 9090X O T3, 9090X O T4, 9090X O T5, 9090X OP, 9090X OP GE, SB33, SB35, SB52, SB53, SB54, SB55, T140, T240, VL5060, VL5080, VL5090, VL530, VL540, VL550, VL570, VM3080, VM3080 AL, VM3090, VM340, VM370, VN2090, VN300, VX7090

REF.731B

SILENCIOSO BLOCO 1 PARAFUSO

Comp. 920018565

9040L, 9040M, 9050L H, 9050L L, 9060L, 9060L GE, 9060L H, 9060L SH, 9070L H, 9070L L, 9070L L T5, 9070M, 9070N H T5, 9070N L, 9070N L T5, 9070 , 9080L, 9080L GE, 9080L H, 9080L SH, 9080N H, 9080N L, 9090L, 9090L GE, 9090L H, 9090L H T4, 9090L H T5, 9090L SH, 9090L T3, 9090X, 9090X GE, 9090X H, 9090X H H, **9090X H T4, 9090X O, 9090X O GE, 9090X O GE T3, 9090X O GE T4, 9090X O GE T5, 9090X O H T4, 9090X** O T3, 9090X O T4, 9090X O T5, 9090X OP, 9090X OP GE, 9090X T3, 9090X T4, 9090X T5, SB36, SB56, SB58, SB60, SB62, SB64, SB65, VL5060, VL5080, VL5090, VL530, VL540, VL550, VL570, VL600, VL6040, VL6050, VL6060, VL6070, VL6080, VL6090, VL610, VL620, VL630, VL640, VL660, VM3080, VM3080 AL, VM3090, VM340, VM370, VM4090, VM460, VN2080, VN2090, VN260, VN300, VX680, VX7090

REF.744A

DEFLETOR

Comp. 944033500

9090X, 9090X GE, 9090X GE T3, 9090X GE T4, 9090X GE T5, 9090X H, 9090X H H, 9090X H T4, 9090X O, 9090X O GE, 9090X O GE T3, 9090X O GE T4, 9090X O GE T5, 9090X O H T4, 9090X O T3, 9090X O T4, 9090X O T5, 9090X OP, 9090X OP GE, 9090X T3, 9090X T4, 9090X T5, SB65, VX680, VX7090

IVA não incluso

Transporte gratuito da UE para pedidos de 50

Todas as marcas comerciais pertencem aos seus respectivos proprietários e seu uso é apenas para fins informativos.

WWW.EDUARDOREPUESTOSAGRICOLAS.COM

Verifique a Ref. Antes.

NEW HOLLAND-BRAUD COMPATIBLE

EDUARDO

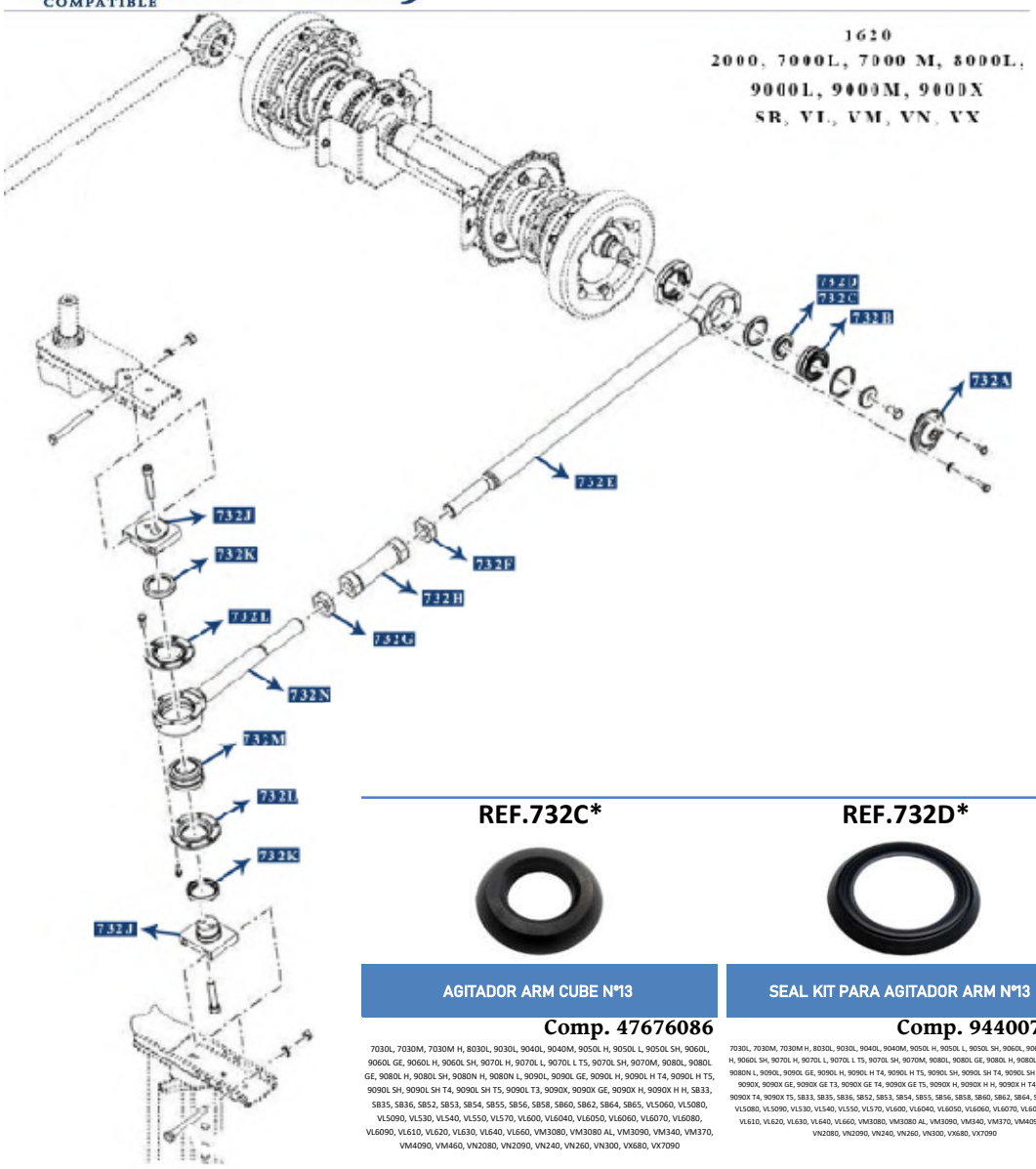

REF.732A*

FLANGE PLUG n°20

Comp. 944000002

1620, 1620S, 2420, 2520, 2620, 2720, 7030L, 7030M, 7030M H, 8030L, 9030L, 9040L, 9040M, 9050L H, 9050L L, 9050L SH, 9060L, 9060L GE, 9060L H, 9060L SH, 9070L H, 9070L L, 9070L L T5, 9070L SH, 9070M, 9080L, 9080L GE, 9080L H, 9080L SH, 9090L, 9090L GE, 9090L H, 9090L H T4, 9090L H T5, 9090L SH, 9090L SH T4, 9090L SH T5, 9090L T3, 9090X, 9090X GE, 9090X GE T3, 9090X GE T4, 9090X GE T5, 9090X H, 9090X H H, 9090X H T4, 9090X T3, 9090X T4, 9090X T5, SB33, SB35, SB36, SB52, SB53, SB54, SB55, SB56, SB58, SB60, SB62, SB64, SB65, VL5060, VL5080, VL5090, VL530, VL540, VL550, VL570, VL600, VL6040, VL6050, VL6060, VL6070, VL6080, VL6090, VL610, VL620, VL630, VL640, VL660, VM3080, VM3080 AL, VM3090, VM340, VM370, VM4090, VM460, VN2090, VN240, VN260, VN300, VX680, VX7090

REF.732B

LEVANDO N°6 ARM BEARING

Comp. 26796210

1620, 1620S, 2420, 2520, 2620, 2720, 7030L, 7030M, 7030M H, 8030L, 9030L, 9040L, 9040M, 9050L H, 9050L L, 9050L SH, 9060L, 9060L GE, 9060L H, 9060L SH, 9070L H, 9070L L, 9070L L T5, 9070L SH, 9070M, 9080L, 9080L GE, 9080L H, 9080L SH, 9080N H, 9080N L, 9090L, 9090L GE, 9090L H, 9090L H T4, 9090L H T5, 9090L SH, 9090L SH T4, 9090L SH T5, 9090L T3, 9090X, 9090X GE, 9090X H, 9090X H H, SB33, SB35, SB36, SB52, SB53, SB54, SB55, SB56, SB58, SB60, SB62, SB64, SB65, VL5060, VL5080, VL5090, VL530, VL540, VL550, VL570, VL600, VL6040, VL6050, VL6060, VL6070, VL6080, VL6090, VL610, VL620, VL630, VL640, VL660, VM3080, VM3080 AL, VM3090, VM340, VM370, VM4090, VM460, VN2080, VN2090, VN240, VN260, VN300, VX680, VX7090

REF.732C*

AGITADOR ARM CUBE N°13

Comp. 47676086

7030L, 7030M, 7030M H, 8030L, 9030L, 9040L, 9040M, 9050L H, 9050L L, 9050L SH, 9060L, 9060L GE, 9060L H, 9060L SH, 9070L H, 9070L L, 9070L L T5, 9070L SH, 9070M, 9080L, 9080L GE, 9080L H, 9080L SH, 9080N H, 9080N L, 9090L, 9090L GE, 9090L H, 9090L H T4, 9090L H T5, 9090L SH, 9090L SH T4, 9090L SH T5, 9090L T3, 9090X, 9090X GE, 9090X GE T3, 9090X GE T4, 9090X GE T5, 9090X H, 9090X H H, SB33, SB35, SB36, SB52, SB53, SB54, SB55, SB56, SB58, SB60, SB62, SB64, SB65, VL5060, VL5080, VL5090, VL530, VL540, VL550, VL570, VL600, VL6040, VL6050, VL6060, VL6070, VL6080, VL6090, VL610, VL620, VL630, VL640, VL660, VM3080, VM3080 AL, VM3090, VM340, VM370, VM4090, VM460, VN2080, VN2090, VN240, VN260, VN300, VX680, VX7090

REF.732D*

SEAL KIT PARA AGITADOR ARM N°13

Comp. 944007716

7030L, 7030M, 7030M H, 8030L, 9030L, 9040L, 9040M, 9050L H, 9050L L, 9050L SH, 9060L, 9060L GE, 9060L H, 9060L SH, 9070L H, 9070L L, 9070L L T5, 9070L SH, 9070M, 9080L, 9080L GE, 9080L H, 9080L SH, 9080N H, 9080N L, 9090L, 9090L GE, 9090L H, 9090L H T4, 9090L H T5, 9090L SH, 9090L SH T4, 9090L SH T5, 9090L T3, 9090X, 9090X GE, 9090X GE T3, 9090X GE T4, 9090X GE T5, 9090X H, 9090X H H, 9090X H T4, 9090X T3, 9090X T4, 9090X T5, SB33, SB35, SB36, SB52, SB53, SB54, SB55, SB56, SB58, SB60, SB62, SB64, SB65, VL5060, VL5080, VL5090, VL530, VL540, VL550, VL570, VL600, VL6040, VL6050, VL6060, VL6070, VL6080, VL6090, VL610, VL620, VL630, VL640, VL660, VM3080, VM3080 AL, VM3090, VM340, VM370, VM4090, VM460, VN2080, VN2090, VN240, VN260, VN300, VX680, VX7090

REF.732E*

LIGAÇÃO ROD N°12

Comp. 944000056

1620, 1620S, 2420, 2520, 2620, 2720, 7030L, 7030M, 7030M H, 8030L, 9030L, 9040L, 9040M, 9050L L, 9050L SH, 9060L, 9060L GE, 9060L H, 9060L SH, 9070L L, 9070L L T5, 9070L SH, 9070M, 9080L, 9080L GE, 9080L H, 9080L SH, 9090L, 9090L GE, 9090L H, 9090L SH, 9090L SH T4, 9090L SH T5, 9090L T3, SB33, SB35, SB36, SB52, SB53, SB54, SB55, SB56, SB58, SB60, SB62, SB64, VL5060, VL5080, VL5090, VL530, VL540, VL550, VL570, VL600, VL6040, VL6050, VL6060, VL6070, VL6080, VL6090, VL610, VL620, VL630, VL640, VL660, VM3080, VM3080 AL, VM3090, VM340, VM370, VM4090, VM460, VN2090, VN300

REF.732F*

THIN NUT n°19

Comp. 920008858

1214, 1620, 1620S, 2420, 2520, 2620, 2720, 7030L, 7030M, 7030M H, 8030L, 9030L, 9040L, 9040M, 9050L H, 9050L L, 9050L SH, 9060L, 9060L GE, 9060L H, 9060L SH, 9070L H, 9070L L, 9070L L T5, 9070L SH, 9070M, 9070N L, 9080L, 9080L GE, 9080L H, 9080L SH, 9080N H, 9080N L, 9090L, 9090L GE, 9090L H, 9090L H T4, 9090L H T5, 9090L SH, 9090L SH T4, 9090L SH T5, 9090L T3, SB33, SB35, SB36, SB52, SB53, SB54, SB55, SB56, SB58, SB60, SB62, SB64, VL5060, VL5080, VL5090, VL530, VL540, VL550, VL570, VL600, VL6040, VL6050, VL6060, VL6070, VL6080, VL6090, VL610, VL620, VL630, VL640, VL660, VM3080, VM3080 AL, VM3090, VM340, VM370, VM4090, VM460, VN2080, VN2090, VN240, VN260, VN300

REF.732G*

THIN NUT N°18

Comp. 707704968

1620, 1620S, 2420, 2520, 2620, 2720, 7030L, 7030M, 7030M H, 8030L, 9030L, 9040L, 9040M, 9050L H, 9050L L, 9050L SH, 9060L, 9060L GE, 9060L H, 9060L SH, 9070L H, 9070L L, 9070L L T5, 9070L SH, 9070M, 9070N L, 9080L, 9080L GE, 9080L H, 9080L SH, 9080N H, 9080N L, 9090L, 9090L GE, 9090L H, 9090L H T4, 9090L H T5, 9090L SH, 9090L SH T4, 9090L SH T5, 9090L T3, SB33, SB35, SB36, SB52, SB53, SB54, SB55, SB56, SB58, SB60, SB62, SB64, VL5060, VL5080, VL5090, VL530, VL540, VL550, VL570, VL600, VL6040, VL6050, VL6060, VL6070, VL6080, VL6090, VL610, VL620, VL630, VL640, VL660, VM3080, VM3080 AL, VM3090, VM340, VM370, VM4090, VM460, VN2080, VN2090, VN240, VN260, VN300

REF.732H*

AJUSTE DE MANGUEIRA N°23

Comp. 944002335

1214, 1620, 1620S, 2420, 2520, 2620, 2720, 7030L, 7030M, 7030M H, 8030L, 9030L, 9040L, 9040M, 9050L H, 9050L L, 9050L SH, 9060L, 9060L GE, 9060L H, 9060L SH, 9070L H, 9070L L, 9070L L T5, 9070L SH, 9070M, 9070N L, 9080L, 9080L GE, 9080L H, 9080L SH, 9090L, 9090L GE, 9090L H, 9090L H T4, 9090L H T5, 9090L SH, 9090L SH T4, 9090L SH T5, 9090L T3, SB33, SB35, SB36, SB52, SB53, SB54, SB55, SB56, SB58, SB60, SB62, SB64, VL5060, VL5080, VL5090, VL530, VL540, VL550, VL570, VL600, VL6040, VL6050, VL6060, VL6070, VL6080, VL6090, VL610, VL620, VL630, VL640, VL660, VM3080, VM3080 AL, VM3090, VM340, VM370, VM4090, VM460, VN2080, VN2090, VN240, VN260, VN300

REF.732J*

Suporte do braço APOIO N°24

Comp. 944007020

7030L, 7030M, 7030M H, 8030L, 9030L, 9040L, 9040M, 9060L, 9060L GE, 9060L H, 9060L SH, 9080L, 9080L GE, 9080L H, 9080L SH, 9090L, 9090L GE, 9090L H, 9090L SH, SB33, SB35, SB36, SB52, SB53, SB54, SB55, SB56, SB58, SB60, SB62, SB64, SB65, VL5060, VL5080, VL5090, VL530, VL540, VL550, VL570, VL600, VL6040, VL6050, VL6060, VL6070, VL6080, VL6090, VL610, VL620, VL630, VL640, VL660, VM3080, VM3080 AL, VM3090, VM340, VM370, VM4090, VM460

REF.732K*

SHUTTER ARM GASKET KIT N°10

Comp. 944007018

7030L, 7030M, 7030M H, 8030L, 9030L, 9040L, 9040M, 9050L H, 9050L L, 9050L SH, 9060L, 9060L GE, 9060L H, 9060L SH, 9070L H, 9070L L, 9070L L T5, 9070L SH, 9070M, 9080L, 9080L GE, 9080L H, 9080L SH, 9090L, 9090L GE, 9090L H, 9090L H T4, 9090L H T5, 9090L SH, 9090L SH T4, 9090L SH T5, 9090L T3, 9090X, 9090X GE, 9090X GE T3, 9090X GE T4, 9090X GE T5, 9090X H, 9090X H H, 9090X H T4, 9090X T3, 9090X T4, 9090X T5, SB33, SB35, SB36, SB52, SB53, SB54, SB55, SB56, SB58, SB60, SB62, SB64, SB65, VL5060, VL5080, VL5090, VL530, VL540, VL550, VL570, VL600, VL6040, VL6050, VL6060, VL6070, VL6080, VL6090, VL610, VL620, VL630, VL640, VL660, VM3080, VM3080 AL, VM3090, VM340, VM370, VM4090, VM460, VN2090, VN300, VX680, VX7090

REF.732L*

RETENTOR ARM AGITADOR N°11

Comp. 944007019

7030L, 7030M, 7030M H, 8030L, 9030L, 9040L, 9040M, 9050L H, 9050L L, 9050L SH, 9060L, 9060L GE, 9060L H, 9060L SH, 9070L H, 9070L L, 9070L L T5, 9070L SH, 9070M, 9080L, 9080L GE, 9080L H, 9080L SH, 9090L, 9090L GE, 9090L H, 9090L H T4, 9090L H T5, 9090L SH, 9090L SH T4, 9090L SH T5, 9090L T3, 9090X, 9090X GE, 9090X GE T3, 9090X GE T4, 9090X GE T5, 9090X H, 9090X H H, 9090X H T4, 9090X T3, 9090X T4, 9090X T5, SB33, SB35, SB36, SB52, SB53, SB54, SB55, SB56, SB58, SB60, SB62, SB64, SB65, VL5060, VL5080, VL5090, VL530, VL540, VL550, VL570, VL600, VL6040, VL6050, VL6060, VL6070, VL6080, VL6090, VL610, VL620, VL630, VL640, VL660, VM3080, VM3080 AL, VM3090, VM340, VM370, VM4090, VM460, VN2090, VN300, VX680, VX7090

REF.732M

SHARP ARM ARTICULAÇÃO N°8

Comp. 920002308

1620, 1620S, 2420, 2514, 2520, 2620, 2714, 2720, 7030L, 7030M, 7030M H, 8030L, 9030L, 9040L, 9040M, 9050L H, 9050L L, 9050L SH, 9060L, 9060L GE, 9060L H, 9060L SH, 9070L H, 9070L L, 9070L L T5, 9070L SH, 9070M, 9080L, 9080L GE, 9080L H, 9080L SH, 9080N H, 9080N L, 9090L, 9090L GE, 9090L H, 9090L H T4, 9090L H T5, 9090L SH, 9090L SH T4, 9090L SH T5, 9090L T3, 9090X, 9090X GE, 9090X GE T3, 9090X GE T4, 9090X GE T5, 9090X H, 9090X H H, 9090X H T4, 9090X T3, 9090X T4, 9090X T5, SB33, SB35, SB36, SB52, SB53, SB54, SB55, SB56, SB58, SB60, SB62, SB64, SB65, VL5060, VL5080, VL5090, VL530, VL540, VL550, VL570, VL600, VL6040, VL6050, VL6060, VL6070, VL6080, VL6090, VL610, VL620, VL630, VL640, VL660, VM3080, VM3080 AL, VM3090, VM340, VM370, VM4090, VM460, VN2080, VN2090, VN240, VN260, VN300, VX680, VX7090

REF.732N*

LIGAÇÃO ROD n°21

Comp. 944000053

1620, 1620S, 2420, 2520, 2620, 2720, 7030L, 7030M, 7030M H, 8030L, 9030L, 9040L, 9040M, 9050L H, 9050L L, 9050L SH, 9060L, 9060L GE, 9060L H, 9060L SH, 9070L L, 9070L L T5, 9070L SH, 9070M, 9080L, 9080L GE, 9080L H, 9080L SH, 9090L, 9090L GE, 9090L H, 9090L SH, 9090L SH T4, 9090L SH T5, 9090L T3, SB33, SB35, SB36, SB52, SB53, SB54, SB55, SB56, SB58, SB60, SB62, SB64, VL5060, VL5080, VL5090, VL530, VL540, VL550, VL570, VL600, VL6040, VL6050, VL6060, VL6070, VL6080, VL6090, VL610, VL620, VL630, VL640, VL660, VM3080, VM3080 AL, VM3090, VM340, VM370, VM4090, VM460, VN2090, VN300

Verifique a Ref. Antes.

Todas as marcas comerciais pertencem aos seus respectivos proprietários e seu uso é apenas para fins informativos.

WWW.EDUARDOREPUESTOSAGRICOLAS.COM

IVA não incluso

Transporte gratuito da UE para pedidos de 50

NEW HOLLAND-BRAUD COMPATIBLE

EDUARDO

REF.501A

REBITES CESTAS CAIXA 250 UDS

Comp. 920018082

1214, 1620, 1620S, 2720, 7030L, 7030M, 7030M H, 8030L, 9030L, 9040L, 9040M, 9050L H, 9050L L, 9050L SH, 9060L, 9060L GE, 9060L H, 9060L SH, 9070L H, 9070L L, 9070L L TS, 9070L SH, 9070M, 9080L, 9080L GE, 9080L H, 9080L SH, 9080N H, 9080N L, 9090L, 9090L GE, 9090L H, 9090L H T4, 9090L H TS, 9090L SH, 9090L SH T4, 9090L SH TS, 9090L T3, 9090X, 9090X GE, 9090X GE T3, 9090X GE T4, 9090X GE TS, 9090X H, 9090X H H, 9090X H T4, 9090X O, 9090X O GE, 9090X O GE T3, 9090X O GE T4, 9090X O GE TS, 9090X O H T4, 9090X O T3, 9090X O T4, 9090X O TS, 9090X OP, 9090X OP GE, 9090X T3, 9090X T4, 9090X TS, LM625, SB33, SB35, SB36, SB52, SB53, SB54, SB55, SB56, SB58, SB60, SB62, SB64, SB65, VL5060, VL5080, VL5090, VL530, VL540, VL550, VL570, VL600, VL6040, VL6050, VL6060, VL6070, VL6080, VL6090, VL610, VL620, VL630, VL640, VL660, VM3080, VM3080 AL, VM3090, VM340, VM370, VM4090, VM460, VN2080, VN2090, VN240, VN260, VN300, VX680, VX7090

REF.502A

PARAFUSO-PORCA auto-bloqueio CESTAS UNIÃO M4-15MM

Comp. -

1214, 1620, 1620S, 2414, 2420, 2514, 2520, 2614, 2620, 2714, 2720, 7030L, 7030M, 7030M H, 8030L, 9030L, 9040L, 9040M, 9050L H, 9050L L, 9050L SH, 9060L, 9060L GE, 9060L H, 9060L SH, 9070L H, 9070L L, 9070L L TS, 9070L SH, 9070M, 9080L, 9080L GE, 9080L H, 9080L SH, 9080N H, 9080N L, 9090L, 9090L GE, 9090L H, 9090L H T4, 9090L H TS, 9090L SH, 9090L SH T4, 9090L SH TS, 9090L T3, 9090X, 9090X GE, 9090X GE T3, 9090X GE T4, 9090X GE TS, 9090X H, 9090X H H, 9090X H T4, 9090X O, 9090X O GE, 9090X O GE T3, 9090X O GE T4, 9090X O GE TS, 9090X O H T4, 9090X O T3, 9090X O T4, 9090X O TS, 9090X OP, 9090X OP GE, 9090X T3, 9090X T4, 9090X TS, SB33, SB35, SB36, SB52, SB53, SB54, SB55, SB56, SB58, SB60, SB62, SB64, SB65, VL5060, VL5080, VL5090, VL530, VL540, VL550, VL570, VL600, VL6040, VL6050, VL6060, VL6070, VL6080, VL6090, VL610, VL620, VL630, VL640, VL660, VM3080, VM3080 AL, VM3090, VM340, VM370, VM4090, VM460, VN2080, VN2090, VN240, VN260, VN300, VX680, VX7090

REF.503A

PARAFUSO M8x50- SPLIT NUT -WASHER

Comp. 70005133,,920019493,,11194079

1214, 1620, 1620S, 2414, 2420, 2514, 2520, 2614, 2620, 2714, 2720, 7030L, 7030M, 7030M H, 8030L, 9030L, 9040L, 9040M, 9050L H, 9050L L, 9050L SH, 9060L, 9060L GE, 9060L H, 9060L SH, 9070L H, 9070L L, 9070L L TS, 9070L SH, 9070M, 9080L, 9080L GE, 9080L H, 9080L SH, 9080N H, 9080N L, 9090L, 9090L GE, 9090L H, 9090L H T4, 9090L H TS, 9090L SH, 9090L SH T4, 9090L SH TS, 9090L T3, 9090X, 9090X GE, 9090X GE T3, 9090X GE T4, 9090X GE TS, 9090X H, 9090X H H, 9090X H T4, 9090X O, 9090X O GE, 9090X O GE T3, 9090X O GE T4, 9090X O GE TS, 9090X O H T4, 9090X O T3, 9090X O T4, 9090X O TS, 9090X OP, 9090X OP GE, 9090X T3, 9090X T4, 9090X TS, SB33, SB35, SB36, SB52, SB53, SB54, SB55, SB56, SB58, SB60, SB62, SB64, SB65, VL5060, VL5080, VL5090, VL530, VL540, VL550, VL570, VL600, VL6040, VL6050, VL6060, VL6070, VL6080, VL6090, VL610, VL620, VL630, VL640, VL660, VM3080, VM3080 AL, VM3090, VM340, VM370, VM4090, VM460, VN2080, VN2090, VN240, VN260, VN300, VX680, VX7090,0,2,1,75

REF.503B

PARAFUSO M8x50

Comp. 70005133

1620, 1620S, 2720, 4880, 7030L, 7030M, 7030M H, 8030L, 9030L, 9040L, 9040M, 9050L H, 9050L L, 9050L SH, 9060L, 9060L GE, 9060L H, 9060L SH, 9070L H, 9070L L, 9070L L TS, 9070L SH, 9070M, 9080L, 9080L GE, 9080L H, 9080L SH, 9090L, 9090L GE, 9090L H, 9090L H T4, 9090L H TS, 9090L SH, 9090L SH T4, 9090L SH TS, 9090L T3, 9090X, 9090X GE, 9090X GE T3, 9090X GE T4, 9090X GE TS, 9090X H, 9090X H H, 9090X H T4, 9090X O, 9090X O GE, 9090X O GE T3, 9090X O GE T4, 9090X O GE TS, 9090X O H T4, 9090X O T3, 9090X O T4, 9090X O TS, 9090X OP, 9090X OP GE, 9090X T3, 9090X T4, 9090X TS, SB33, SB35, SB36, SB52, SB53, SB54, SB55, SB56, SB58, SB60, SB62, SB64, SB65, VL5060, VL5080, VL5090, VL530, VL540, VL550, VL570, VL600, VL6040, VL6050, VL6060, VL6070, VL6080, VL6090, VL610, VL620, VL630, VL640, VL660, VM3080, VM3080 AL, VM3090, VM340, VM370, VM4090, VM460, VN2080, VN2090, VN240, VN260, VN300, VX680, VX7090

REF.504B

PARAFUSO -M10X70 + SPLIT PORCA (12.9 galvanizado)

Comp. 1107674, 92001949

1620, 1620S, 2720, 4880, 7030L, 7030M, 7030M H, 8030L, 9030L, 9040L, 9040M, 9050L H, 9050L L, 9050L SH, 9060L, 9060L GE, 9060L H, 9060L SH, 9070L H, 9070L L, 9070L L TS, 9070L SH, 9070M, 9080L, 9080L GE, 9080L H, 9080L SH, 9090L, 9090L GE, 9090L H, 9090L H T4, 9090L H TS, 9090L SH, 9090L SH T4, 9090L SH TS, 9090L T3, 9090X, 9090X GE, 9090X GE T3, 9090X GE T4, 9090X GE TS, 9090X H, 9090X H H, 9090X H T4, 9090X O, 9090X O GE, 9090X O GE T3, 9090X O GE T4, 9090X O GE TS, 9090X O H T4, 9090X O T3, 9090X O T4, 9090X O TS, 9090X OP, 9090X OP GE, 9090X T3, 9090X T4, 9090X TS, SB33, SB35, SB36, SB52, SB53, SB54, SB55, SB56, SB58, SB60, SB62, SB64, SB65, VL5060, VL5080, VL5090, VL530, VL540, VL550, VL570, VL600, VL6040, VL6050, VL6060, VL6070, VL6080, VL6090, VL610, VL620, VL630, VL640, VL660, VM3080, VM3080 AL, VM3090, VM340, VM370, VM4090, VM460, VN2080, VN2090, VN240, VN260, VN300, VX680, VX7090 - VENDIMIADORA (01/07 - 12/12)

REF.504C

PARAFUSO -M10X70 (empate frente para baixo shakers) (12,9 galvanizado)

Comp. 1107674

1620, 1620S, 4600, 7030L, 7030M, 7030M H, 8030L, 9030L, 9040L, 9040M, 9050L H, 9050L L, 9050L SH, 9060L, 9060L GE, 9060L H, 9060L SH, 9070L H, 9070L L, 9070L L TS, 9070L SH, 9070M, 9080L, 9080L GE, 9080L H, 9080L SH, 9090L, 9090L GE, 9090L H, 9090L H T4, 9090L H TS, 9090L SH, 9090L SH T4, 9090L SH TS, 9090L T3, 9090X, 9090X GE, 9090X GE T3, 9090X GE T4, 9090X GE TS, 9090X H, 9090X H H, 9090X H T4, 9090X O, 9090X O GE, 9090X O GE T3, 9090X O GE T4, 9090X O GE TS, 9090X O H T4, 9090X O T3, 9090X O T4, 9090X O TS, 9090X OP, 9090X OP GE, 9090X T3, 9090X T4, 9090X TS, SB33, SB35, SB36, SB52, SB53, SB54, SB55, SB56, SB58, SB60, SB62, SB64, SB65, VL5060, VL5080, VL5090, VL530, VL540, VL550, VL570, VL600, VL6040, VL6050, VL6060, VL6070, VL6080, VL6090, VL610, VL620, VL630, VL640, VL660, VM3080, VM3080 AL, VM3090, VM340, VM370, VM4090, VM460, VN2080, VN2090, VN240, VN260, VN300, VX680, VX7090

REF.504D

PARAFUSO -M10X80 HASTE DE AMARRAÇÃO TRASEIRA 12,9 Zn

Comp. 11107774

7030L, 7030M, 7030M H, 8030L, 9030L, 9040L, 9040M, 9050L H, 9050L L, 9050L SH, 9060L, 9060L GE, 9060L H, 9060L SH, 9070L H, 9070L L, 9070L L TS, 9070L SH, 9070M, 9080L, 9080L GE, 9080L H, 9080L SH, 9090L, 9090L GE, 9090L H, 9090L H T4, 9090L H TS, 9090L SH, 9090L SH T4, 9090L SH TS, 9090L T3, 9090X, 9090X GE, 9090X GE T3, 9090X GE T4, 9090X GE TS, 9090X H, 9090X H H, 9090X H T4, 9090X O, 9090X O GE, 9090X O GE T3, 9090X O GE T4, 9090X O GE TS, 9090X O H T4, 9090X O T3, 9090X O T4, 9090X O TS, 9090X OP, 9090X OP GE, 9090X T3, 9090X T4, 9090X TS, SB33, SB35, SB36, SB53, SB54, SB55, SB56, SB58, SB60, SB62, SB64, SB65, VL5060, VL5080, VL5090, VL530, VL540, VL550, VL570, VL600, VL6040, VL6050, VL6060, VL6070, VL6080, VL6090, VL610, VL620, VL630, VL640, VL660, VM3080, VM3080 AL, VM3090, VM340, VM370, VM4090, VM460, VN2090, VN300, VX680, VX7090

REF.504F

PARAFUSO -M10X80 AMORTECEDORES DIANTEIROS 12,9 Zn

Comp. 11107874

7030L, 7030M, 7030M H, 8030L, 9030L, 9040L, 9040M, 9050L H, 9050L L, 9050L SH, 9060L, 9060L GE, 9060L H, 9060L SH, 9070L H, 9070L L, 9070L L TS, 9070L SH, 9070M, 9080L, 9080L GE, 9080L H, 9080L SH, 9090L, 9090L GE, 9090L H, 9090L H T4, 9090L H TS, 9090L SH, 9090L SH T4, 9090L SH TS, 9090L T3, 9090X, 9090X GE, 9090X GE T3, 9090X GE T4, 9090X GE TS, 9090X H, 9090X H H, 9090X H T4, 9090X O, 9090X O GE, 9090X O GE T3, 9090X O GE T4, 9090X O GE TS, 9090X O H T4, 9090X O T3, 9090X O T4, 9090X O TS, 9090X OP, 9090X OP GE, 9090X T3, 9090X T4, 9090X TS, SB33, SB35, SB36, SB53, SB55, SB56, SB58, SB60, SB62, SB64, SB65, VL5060, VL5080, VL5090, VL530, VL540, VL550, VL570, VL600, VL6040, VL6050, VL6060, VL6070, VL6080, VL6090, VL610, VL620, VL630, VL640, VL660, VM3080, VM3080 AL, VM3090, VM340, VM370, VM4090, VM460, VN2090, VN300, VX680, VX7090,2,35,1,32

REF.504G

PARAFUSO -M10X80 + SPLIT PORCA (12.9 galvanizado)

Comp. 11107874, 92001949

7030L, 7030M, 7030M H, 8030L, 9030L, 9040L, 9040M, 9050L H, 9050L L, 9050L SH, 9060L, 9060L GE, 9060L H, 9060L SH, 9070L H, 9070L L, 9070L L TS, 9070L SH, 9070M, 9080L, 9080L GE, 9080L H, 9080L SH, 9090L, 9090L GE, 9090L H, 9090L H T4, 9090L H TS, 9090L SH, 9090L SH T4, 9090L SH TS, 9090L T3, 9090X, 9090X GE, 9090X GE T3, 9090X GE T4, 9090X GE TS, 9090X H, 9090X H H, 9090X H T4, 9090X O, 9090X O GE, 9090X O GE T3, 9090X O GE T4, 9090X O GE TS, 9090X O H T4, 9090X O T3, 9090X O T4, 9090X O TS, 9090X OP, 9090X OP GE, 9090X T3, 9090X T4, 9090X TS, SB33, SB35, SB36, SB53, SB55, SB56, SB58, SB60, SB62, SB64, SB65, VL5060, VL5080, VL5090, VL530, VL540, VL550, VL570, VL600, VL6040, VL6050, VL6060, VL6070, VL6080, VL6090, VL610, VL620, VL630, VL640, VL660, VM3080, VM3080 AL, VM3090, VM340, VM370, VM4090, VM460, VN2090, VN300, VX680, VX7090,2,35,1,32,2,37

REF.504E

PARAFUSO -M10X75 + SPLIT PORCA (12.9 galvanizado)

Comp. 11107774, 92001949

7030L, 7030M, 7030M H, 8030L, 9030L, 9040L, 9040M, 9050L H, 9050L L, 9050L SH, 9060L, 9060L GE, 9060L H, 9060L SH, 9070L H, 9070L L, 9070L L TS, 9070L SH, 9070M, 9080L, 9080L GE, 9080L H, 9080L SH, 9090L, 9090L GE, 9090L H, 9090L H T4, 9090L H TS, 9090L SH, 9090L SH T4, 9090L SH TS, 9090L T3, 9090X, 9090X GE, 9090X GE T3, 9090X GE T4, 9090X GE TS, 9090X H, 9090X H H, 9090X H T4, 9090X O, 9090X O GE, 9090X O GE T3, 9090X O GE T4, 9090X O GE TS, 9090X O H T4, 9090X O T3, 9090X O T4, 9090X O TS, 9090X OP, 9090X OP GE, 9090X T3, 9090X T4, 9090X TS, SB33, SB35, SB36, SB53, SB55, SB56, SB58, SB60, SB62, SB64, SB65, VL5060, VL5080, VL5090, VL530, VL540, VL550, VL570, VL600, VL6040, VL6050, VL6060, VL6070, VL6080, VL6090, VL610, VL620, VL630, VL640, VL660, VM3080, VM3080 AL, VM3090, VM340, VM370, VM4090, VM460, VN2090, VN300, VX680, VX7090,2,35

REF.505B

PARAFUSO M10X70-SPLIT NUT -WASHERS

Comp. 11107674,944008815,11198479,920019491

1620, 1620S, 4600, 7030L, 7030M, 7030M H, 8030L, 9030L, 9040L, 9040M, 9050L H, 9050L L, 9050L SH, 9060L, 9060L GE, 9060L H, 9060L SH, 9070L H, 9070L L, 9070L L TS, 9070L SH, 9070M, 9080L, 9080L GE, 9080L H, 9080L SH, 9090L, 9090L GE, 9090L H, 9090L H T4, 9090L H TS, 9090L SH, 9090L SH T4, 9090L SH TS, 9090L T3, 9090X, 9090X GE, 9090X GE T3, 9090X GE T4, 9090X GE TS, 9090X H, 9090X H H, 9090X H T4, 9090X O, 9090X O GE, 9090X O GE T3, 9090X O GE T4, 9090X O GE TS, 9090X O H T4, 9090X O T3, 9090X O T4, 9090X O TS, 9090X OP, 9090X OP GE, 9090X T3, 9090X T4, 9090X TS, SB33, SB35, SB36, SB52, SB53, SB54, SB55, SB56, SB58, SB60, SB62, SB64, SB65, VL5060, VL5080, VL5090, VL530, VL540, VL550, VL570, VL600, VL6040, VL6050, VL6060, VL6070, VL6080, VL6090, VL610, VL620, VL630, VL640, VL660, VM3080, VM3080 AL, VM3090, VM340, VM370, VM4090, VM460, VN2090, VN240, VN260, VN300, VX680, VX7090 - VENDIMIADORA (01/07 - 12/12)

REF.506A

arruela de fechamento

Comp. 944008815

1620, 1620S, 7030L, 7030M, 7030M H, 8030L, 9030L, 9040L, 9040M, 9050L H, 9050L L, 9050L SH, 9060L, 9060L GE, 9060L H, 9060L SH, 9070L H, 9070L L, 9070L L TS, 9070L SH, 9070M, 9080L, 9080L GE, 9080L H, 9080L SH, 9090L, 9090L GE, 9090L H, 9090L H T4, 9090L H TS, 9090L SH, 9090L SH T4, 9090L SH TS, 9090L T3, 9090X, 9090X GE, 9090X GE T3, 9090X GE T4, 9090X GE TS, 9090X H, 9090X H H, 9090X H T4, 9090X O, 9090X O GE, 9090X O GE T3, 9090X O GE T4, 9090X O GE TS, 9090X O H T4, 9090X O T3, 9090X O T4, 9090X O TS, 9090X OP, 9090X OP GE, 9090X T3, 9090X T4, 9090X TS, SB33, SB35, SB36, SB52, SB53, SB54, SB55, SB56, SB58, SB60, SB62, SB64, SB65, VL5060, VL5080, VL5090, VL530, VL540, VL550, VL570, VL600, VL6040, VL6050, VL6060, VL6070, VL6080, VL6090, VL610, VL620, VL630, VL640, VL660, VM3080, VM3080 AL, VM3090, VM340, VM370, VM4090, VM460, VN2080, VN2090, VN240, VN260, VN300, VX680, VX7090

REF.507A

SCREW - KIT PLACA M10-40mm

Comp. 70770628,920009501

REF.507B

SCREW - NUT - WASHER M8-25mm

Comp. -

REF.509A

diâmetro TRANSMISSÃO DO SENSOR 12 NPN. (SB)

Comp. 920019073

SB36, SB56, SB58, SB60, SB62, SB64, SB65

REF.509B

TRANSMISSÃO DO SENSOR diameter12 PNP. (SB, VL, VX)

Comp. 920018843

SB33, SB35, SB36, SB53, SB55, SB56, SB58, SB60, SB62, SB64, SB65, TB10, TB15, VL5060, VL5080, VL5090, VL600, VL6040, VL6050, VL6060, VL6070, VL6080, VL6090, VL610, VL620, VL630, VL640, VL660, VM3080, VM3080 AL, VM3090, VM4090, VM460, VN2080, VN2090, VN240, VN260, VX680, VX7090

REF.509C

SWITCHING diâmetro PAC INTERRUPTOR 18 (9000L, VL, VX)

Comp. 920019770

9060L GE, 9080L GE, 9090L GE, SB33, SB35, SB53, SB55, VL5060, VL5080, VL5090, VL530, VL540, VL550, VL570, VL600, VL6040, VL6050, VL6060, VL6070, VL6080, VL6090, VL610, VL620, VL630, VL640, VL660, VM3080, VM3080 AL, VM3090, VM340, VM370, VM4090, VM460, VN2080, VN2090, VN300, VX680, VX7090

REF.509D

EXTRATOR SENSOR (VL, VX)

Comp. 87644844

9080N H, 9080N L, SB33, SB35, SB36, SB53, SB55, SB56, SB58, SB60, SB62, SB64, VL5060, VL5080, VL5090, VL530, VL540, VL550, VL570, VL600, VL6040, VL6050, VL6060, VL6070, VL6080, VL6090, VL610, VL620, VL630, VL640, VL660, VM3080, VM3080 AL, VM3090, VM340, VM370, VM4090, VM460, VN2080, VN2090, VN300, VX680, VX7090

REF.509F

SENSOR diameter18 PNP. (SB, VL, VM, VN, VX, 9000)

Comp. 920018842

1620S, 2420, 2520, 2620, 2720, 9040L, 9040M, 9060L, 9060L GE, 9060L H, 9060L SH, 9080L, 9080L GE, 9080L H, 9080L SH, 9090L, 9090L GE, 9090L H, 9090L SH, 9090X, 9090X GE, 9090X H, 9090X OP, 9090X OP GE, SB33, SB35, SB36, SB52, SB53, SB54, SB55, SB56, SB58, SB60, SB62, SB64, SB65, TB10, TB15, VL5060, VL5080, VL5090, VL600, VL6040, VL6050, VL6060, VL6070, VL6080, VL6090, VL610, VL620, VL630, VL640, VL660, VM3080, VM3080 AL, VM3090, VM4090, VM460, VN2080, VN2090, VN240, VN260, VX680, VX7090

REF.509G

SENSOR (código original 87342073) (9090)

Comp. 87342073

8030L, 9030L, 9040L, 9040M, 9050L H, 9050L L, 9050L SH, 9060L, 9060L GE, 9060L H, 9060L SH, 9070L H, 9070L L, 9070L L TS, 9070L SH, 9070M, 9070N H TS, 9070N L, 9070N L TS, 9070 , 9080L, 9080L GE, 9080L H, 9080L SH, 9080N H, 9080N L, 9090L, 9090L GE, 9090L H, 9090L H T4, 9090L H TS, 9090L SH, 9090L SH T4, **9090L SH TS, 9090L T3, 9090X, 9090X GE, 9090X GE T3, 9090X GE T4, 9090X GE TS, 9090X H, 9090X H H,** 9090X H T4, 9090X O, 9090X O GE, 9090X O GE T3, 9090X O GE T4, 9090X O GE TS, 9090X O H T4, 9090X O T3, 9090X O T4, 9090X O TS, 9090X OP, 9090X OP GE, 9090X T3, 9090X T4, 9090X TS, 9090X VL530, VL540, VL550, VL570, VL600, VL6040, VL6050, VL6060, VL6070, VL6080, VL6090, VL610, VL620, VL630, VL640, VL660, VM3080, VM3080 AL, VM3090, VM340, VM370, VM4090, VM460, VN2090, VN300, VX680, VX7090 - VENDIMIADORA (01/07 - 12/12), VX7090-OLIVES - VENDIMIADORA SÚPER INTENSIVA OLIVAS (10/10 - 12/13)

IVA não incluso

Transporte gratuito da UE para pedidos de 5(

Todas as marcas comerciais pertencem aos seus respectivos proprietários e seu uso é apenas para fins informativos.

WWW.EDUARDOREPUESTOSAGRICOLAS.COM

Verifique a Ref. Antes.

NEW HOLLAND-BRAUD COMPATIBLE

EDUARDO

REF.540A

PARAFUSO-PORCA autoblocante-WASHER M8X25 (Zn) FIXAÇÃO DE GUIA-ALOJAMENTO

920008122+920011230)(SUJECCIÓN GUÍAS-CARCASA)

1620, 1620S, 2420, 2514, 2520, 2620, 2714, 2720, 7030L, 7030M, 7030M H, 8030L, 9030L, 9040L, 9040M, 9050L H, 9050L L, 9050L SH, 9060L, 9060L GE, 9060L H, 9060L SH, 9070L H, 9070L L, 9070L L T5, 9070L SH, 9070M, 9070N H T5, 9070N L, 9070N L T5, 9070 , 9080L, 9080L GE, 9080L H, 9080L SH, 9080N H, 9080N L, 9090L, 9090L GE, 9090L H, 9090L H T4, 9090L H T5, 9090L SH, 9090L SH T4, 9090L SH T5, 9090L T3, 9090X, 9090X GE, 9090X GE T3, 9090X GE T4, 9090X GE T5, 9090X H, 9090X H H, 9090X H T4, 9090X O, 9090X O GE, 9090X O GE T3, 9090X O GE T4, 9090X O GE T5, 9090X O H T4, 9090X O T3, 9090X O T4, 9090X O T5, 9090X OP, 9090X OP GE, 9090X T3, 9090X T4, 9090X T5, 5833, 5835, 5836, 5852, 5853, 5854, 5855, 5856, 5858, 5860, 5862, 5864, 5865, T140, T240, TB10, TB15, VL5060, VL5080, VL5090, VL530, VL540, VL550, VL570, VL600, VL6040, VL6050, VL6060, VL6070, VL6080, VL6090, VL610, VL620, VL630, VL640, VL660, VM3080, VM3080 AL, VM3090, VM340, VM370, VM4090, VM460, VN2080, VN2090, VN240, VN260, VN300, VX680,

REF.578A

SPLIT NUT M8

Comp. 920019493

7030L, 7030M, 7030M H, 8030L, 9030L, 9040L, 9040M, 9050L H, 9050L L, 9050L SH, 9060L, 9060L GE, 9060L H, 9060L SH, 9070L H, 9070L L, 9070L L T5, 9070L SH, 9070M, 9070N H T5, 9070N L, 9070N L T5, 9070 , 9080L, 9080L GE, 9080L H, 9080L SH, 9080N H, 9080N L, 9090L, 9090L GE, 9090L H, 9090L H T4, 9090L H T5, 9090L SH, 9090L SH T4, 9090L SH T5, 9090L T3, 9090X, 9090X GE, 9090X GE T3, 9090X GE T4, 9090X GE T5, 9090X H, 9090X H H, 9090X H T4, 9090X O, 9090X O GE, 9090X O GE T3, 9090X O GE T4, 9090X O GE T5, 9090X O H T4, 9090X O T3, 9090X O T4, 9090X O T5, 9090X OP, 9090X OP GE, 9090X T3, 9090X T4, 9090X T5, 5833, 5835, 5836, 5853, 5855, 5856, 5858, 5860, 5862, 5864, 5865, TB10, TB15, VL5060, VL5080, VL5090, VL530, VL540, VL550, VL570, VL600, VL6040, VL6050, VL6060, VL6070, VL6080, VL6090, VL610, VL620, VL630, VL640, VL660, VM3080, VM3080 AL, VM3090, VM340, VM370, VM4090, VM460, VN2080, VN2090, VN240, VN260, VN300, VX680, VX7090

REF.578B

SPLIT NUT M10

Comp. 920019492

7030L, 7030M, 7030M H, 8030L, 9030L, 9040L, 9040M, 9050L H, 9050L L, 9050L SH, 9060L, 9060L GE, 9060L H, 9060L SH, 9070L H, 9070L L, 9070L L T5, 9070L SH, 9070M, 9080L, 9080L GE, 9080L H, 9080L SH, 9080N H, 9080N L, 9090L, 9090L GE, 9090L H, 9090L H T4, 9090L H T5, 9090L SH, 9090L SH T4, 9090L SH T5, 9090L T3, 9090X, 9090X GE, 9090X GE T3, 9090X GE T4, 9090X GE T5, 9090X H, 9090X H H, 9090X H T4, 9090X O, 9090X O GE, 9090X O GE T3, 9090X O GE T4, 9090X O GE T5, 9090X O H T4, 9090X O T3, 9090X O T4, 9090X O T5, 9090X OP, 9090X OP GE, 9090X T3, 9090X T4, 9090X T5, 5833, 5835, 5836, 5853, 5855, 5856, 5858, 5860, 5862, 5864, 5865, TB10, TB15, VL5060, VL5080, VL5090, VL530, VL540, VL550, VL570, VL600, VL6040, VL6050, VL6060, VL6070, VL6080, VL6090, VL610, VL620, VL630, VL640, VL660, VM3080, VM3080 AL, VM3090, VM340, VM370, VM4090, VM460, VN2080, VN2090, VN240, VN260, VN300, VX680, VX7090

REF.578C

SPLIT PORCA M12

Comp. 920017399

1620, 1620S, 2420, 2520, 2620, 2720, 7030L, 7030M, 7030M H, 8030L, 9030L, 9040L, 9040M, 9050L H, 9050L L, 9050L SH, 9060L, 9060L GE, 9060L H, 9060L SH, 9070L H, 9070L L, 9070L L T5, 9070L SH, 9070M, 9080L, 9080L GE, 9080L H, 9080L SH, 9080N H, 9080N L, 9090L, 9090L GE, 9090L H, 9090L H T4, 9090L H T5, 9090L SH, 9090L SH T4, 9090L SH T5, 9090L T3, 9090X, 9090X GE, 9090X GE T3, 9090X GE T4, 9090X GE T5, 9090X H, 9090X H H, 9090X H T4, 9090X O, 9090X O GE, 9090X O GE T3, 9090X O GE T4, 9090X O GE T5, 9090X O H T4, 9090X O T3, 9090X O T4, 9090X O T5, 9090X OP, 9090X OP GE, 9090X T3, 9090X T4, 9090X T5, 5833, 5835, 5836, 5852, 5853, 5854, 5855, 5856, 5858, 5860, 5862, 5864, 5865, VL5060, VL5080, VL5090, VL530, VL540, VL550, VL570, VL600, VL6040, VL6050, VL6060, VL6070, VL6080, VL6090, VL610, VL620, VL630, VL640, VL660, VM3080, VM3080 AL, VM3090, VM340, VM370, VM4090, VM460, VN2080, VN240, VN260, VX680, VX7090

REF.578D

SPLIT NUT M14

Comp. 920019392

7030M, 7030M H, 8030L, 9030L, 9040L, 9040M, 9050L H, 9050L L, 9050L SH, 9060L, 9060L GE, 9060L H, 9060L SH, 9070L H, 9070L L, 9070L L T5, 9070L SH, 9070M, 9080L, 9080L GE, 9080L H, 9080L SH, 9090L, 9090L GE, 9090L H, 9090L H T4, 9090L H T5, 9090L SH, 9090L SH T4, 9090L SH T5, 9090L T3, 9090X, 9090X GE, 9090X GE T3, 9090X GE T4, 9090X GE T5, 9090X H, 9090X H H, 9090X H T4, 9090X T3, 9090X T4, 9090X T5, 5833, 5835, 5836, 5853, 5855, 5856, 5858, 5860, 5862, 5864, 5865, VL5060, VL5080, VL5090, VL530, VL540, VL550, VL570, VL600, VL6040, VL6050, VL6060, VL6070, VL6080, VL6090, VL610, VL620, VL630, VL640, VL660, VM3080, VM3080 AL, VM3090, VM340, VM370, VM4090, VM460, VX680, VX7090

REF.578E

SPLIT NUT M16

Comp. 920019650

7030L, 7030M, 7030M H, 8030L, 9030L, 9040L, 9040M, 9050L H, 9050L L, 9050L SH, 9060L, 9060L GE, 9060L H, 9060L SH, 9070L H, 9070L L, 9070L L T5, 9070L SH, 9070M, 9080L, 9080L GE, 9080L H, 9080L SH, 9090L, 9090L GE, 9090L H, 9090L H T4, 9090L H T5, 9090L SH, 9090L SH T4, 9090L SH T5, 9090L T3, 9090X, 9090X GE, 9090X GE T3, 9090X GE T4, 9090X GE T5, 9090X H, 9090X H H, 9090X H T4, 9090X T3, 9090X T4, 9090X T5, VL5080, VL5090, VL550, VL570, VL6050, VL6060, VL6070, VL6080, VL6090, VL610, VL620, VL630, VL640, VL660, VM3080 AL, VM3090, VM370, VM4090, VM460, VX680, VX7090

REF.716A

BOLINHAS DE MOVIMENTO correias transportadoras

Comp. 84205000

7030L, 7030M, 7030M H, 8030L, 9030L, 9040L, 9040M, 9050L H, 9050L L, 9050L SH, 9060L, 9060L GE, 9060L H, 9060L SH, 9070L H, 9070L L, 9070L L T5, 9070L SH, 9070M, 9080L, 9080L GE, 9080L H, 9080L SH, 9080N H, 9080N L, 9090L, 9090L GE, 9090L H, 9090L H T4, 9090L H T5, 9090L SH, 9090L SH T4, 9090L SH T5, 9090L T3, 9090X, 9090X GE, 9090X GE T3, 9090X GE T4, 9090X GE T5, 9090X H, 9090X H H, 9090X H T4, 9090X O, 9090X O GE T3, 9090X O GE T4, 9090X O GE T5, 9090X O H T4, 9090X O T3, 9090X O T4, 9090X O T5, 9090X OP, 9090X OP GE, 9090X T3, 9090X T4, 9090X T5, 5833, 5835, 5836, 5853, 5855, 5856, 5858, 5860, 5862, 5864, 5865, TB10, TB15, VL5060, VL5080, VL5090, VL530, VL540, VL550, VL570, VL600, VL6040, VL6050, VL6060, VL6070, VL6080, VL6090, VL610, VL620, VL630, VL640, VL660, VM3080, VM3080 AL, VM3090, VM340, VM370, VM4090, VM460, VN2080, VN2090, VN240, VN260, VN300, VX680, VX7090

REF.716B

MOVIMENTO ROSES BELTS Desengaçador

Comp. 84122562

7030M, 7030M H, 8030L, 9040L, 9040M, 9050L H, 9050L L, 9050L SH, 9060L, 9060L GE, 9060L H, 9070L H, 9070L L, 9070L L T5, 9070L SH, 9070M, 9080L, 9080L GE, 9080L H, 9090L, 9090L GE, 9090L H, 9090L H T4, 9090L H T5, 9090L SH T4, 9090L SH T5, 9090L T3, 9090X, 9090X GE T3, 9090X GE T4, 9090X GE T5, 9090X H, 9090X H H, 9090X T3, VL5060, VN2090

REF.716C

MOVIMENTO EIXOS Desengaçador DEDO

Comp. 84122561

7030L, 7030M, 7030M H, 8030L, 9030L, 9040L, 9040M, 9050L H, 9050L L, 9050L SH, 9060L, 9060L GE, 9060L H, 9070L H, 9070L L, 9070L L T5, 9070L SH, 9070M, 9080L, 9080L GE, 9080L H, 9080N H, 9080N L, 9090L, 9090L GE, 9090L H, 9090L H T4, 9090L H T5, 9090L SH T4, 9090L SH T5, 9090L T3, 9090X, 9090X GE T3, 9090X GE T4, 9090X GE T5, 9090X H, 9090X H H, 9090X H T4, 9090X T3, 9090X T4, 9090X T5, VL5060, VN2080, VN2090

REF.716D

MOVIMENTO SEM FIM HIDRÁULICO CABEÇA DE OLIVEIRA

Comp. 920009489

9060L GE, 9080L GE, 9090L GE, 9090X GE, 9090X GE T3, 9090X GE T4, 9090X GE T5, 9090X O, 9090X O GE, 9090X O GE T3, 9090X O H T4, 9090X O T3, 9090X O T4, 9090X O T5, 9090X OP, 9090X OP GE, T140, T240, VL6060, VL6080, VL6090, VL620, VL640, VL660, VN2080, VX680, VX7090

REF.716E

FANS MOVIMENTO DE EXTRAÇÃO CANTO SUPERIOR DIREITO

Comp. 920019656

7030L, 7030M, 7030M H, 8030L, 9040L, 9040M, 9060L, 9060L GE, 9060L H, 9060L SH, 9080L, 9080L GE, 9080L H, 9080L SH, 9090L, 9090L GE, 9090L H, 9090L SH, 9090X, 9090X GE, 9090X H, 9090X H H, SB33, SB35, SB53, SB55, VL5060, VL5080, VL5090, VL530, VL540, VL550, VL570, VL600, VL6040, VL6050, VL6060, VL6070, VL6080, VL6090, VL610, VL620, VL630, VL640, VL660, VM3080, VM3080 AL, VM3090, VM340, VM370, VM4090, VM460, VN2090, VN300, VX680, VX7090

REF.716H

FANS MOVIMENTO DE EXTRAÇÃO SUPERIOR ESQUERDO

Comp. 920019657

7030L, 7030M, 7030M H, 8030L, 9040L, 9040M, 9060L, 9060L GE, 9060L H, 9060L SH, 9080L, 9080L GE, 9080L H, 9080L SH, 9090L, 9090L GE, 9090L H, 9090L SH, 9090X, 9090X GE, 9090X H, 9090X H H, SB33, SB35, SB53, SB55, VL5060, VL5080, VL5090, VL530, VL540, VL550, VL570, VL600, VL6040, VL6050, VL6060, VL6070, VL6080, VL6090, VL610, VL620, VL630, VL640, VL660, VM3080, VM3080 AL, VM3090, VM340, VM370, VM4090, VM460, VN2090, VN300

REF.718A

Luzes LED, LED trabalho leve 12 / 30V 1200lm

Comp. -

1214, 1620, 1620S, 2414, 2420, 2514, 2520, 2614, 2620, 2714, 2720, 7030L, 7030M, 7030M H, 8030L, 9030L, 9040L, 9040M, 9050L H, 9050L L, 9050L SH, 9060L, 9060L GE, 9060L H, 9060L SH, 9070L H, 9070L L, 9070L L T5, 9070L SH, 9070M, 9080L, 9080L GE, 9080L H, 9080L SH, 9080N H, 9080N L, 9090L, 9090L GE, 9090L H, 9090L H T4, 9090L H T5, 9090L SH, 9090L SH T4, 9090L SH T5, 9090L T3, 9090X, 9090X GE, 9090X GE T3, 9090X GE T4, 9090X GE T5, 9090X H, 9090X H H, 9090X H T4, 9090X O, 9090X O GE, 9090X O GE T3, 9090X O GE T4, 9090X O GE T5, 9090X O H T4, 9090X O T3, 9090X O T4, 9090X O T5, 9090X OP, 9090X OP GE, 9090X T3, 9090X T4, 9090X T5, 5833, 5835, 5836, 5852, 5853, 5854, 5855, 5856, 5858, 5860, 5862, 5864, 5865, VL5060, VL5080, VL5090, VL530, VL540, VL550, VL570, VL600, VL6040, VL6050, VL6060, VL6070, VL6080, VL6090, VL610, VL620, VL630, VL640, VL660, VM3080, VM3080 AL, VM3090, VM340, VM370, VM4090, VM460, VN2080, VN2090, VN240, VN260, VN300, VX680, VX7090

REF.733A

GANCHO

Comp. 920017733

1620, 1620S, 7030L, 7030M, 7030M H, 8030L, 9030L, 9040L, 9040M, 9050L H, 9050L L, 9050L SH, 9060L, 9060L GE, 9060L H, 9060L SH, 9070L H, 9070L L, 9070L L T5, 9070L SH, 9070M, 9080L, 9080L GE, 9080L H, 9080L SH, 9090L, 9090L GE, 9090L H, 9090L H T4, 9090L H T5, 9090L SH, 9090L SH T4, 9090L SH T5, 9090L T3, 9090X, 9090X GE, 9090X GE T3, 9090X GE T4, 9090X GE T5, 9090X H, 9090X H H, 9090X H T4, 9090X O GE T3, 9090X O GE T4, 9090X O GE T5, 9090X O H T4, 9090X O T3, 9090X O T4, 9090X O T5, 9090X T3, 9090X T4, 9090X T5, 5833, 5835, 5836, 5853, 5855, 5856, 5858, 5860, 5862, 5864, 5865, TB10, TB15, VL5060, VL5080, VL5090, VL530, VL540, VL550, VL570, VL600, VL6040, VL6050, VL6060, VL6070, VL6080, VL6090, VL610, VL620, VL630, VL640, VL660, VM3080, VM3080 AL, VM3090, VM340, VM370, VM4090, VM460, VN2080, VN2090, VN240, VN260, VN300, VX680, VX7090

REF.743B

cabeça do parafuso M8x20 + SPLIT + WASHER

Comp. -

9030L, 9050L H, 9050L L, 9070L H, 9070L L, 9070L L T5, 9070M, 9090L H T4, 9090L H T5, 9090L T3, 9090X H T4, 9090X T3, 9090X T4, 9090X T5,0,31,0,5

REF.745A

PLATAFORMA DE DESGASTE 1mm

Comp. 84602774

9090X O, 9090X O GE, 9090X O GE T3, 9090X O GE T4, 9090X O GE T5, 9090X O H T4, 9090X O T3, 9090X O T4, 9090X O T5, 9090X OP, 9090X OP GE, VX7090

REF.710A*

BRAUD PUXANDO SPROCKET para a cadeia DIREITO

Comp. 944029254,944005

7030L, 7030M, 7030M H, 8030L, 9030L, 9040L, 9040M, 9050L H, 9050L L, 9050L SH, 9060L, 9060L GE, 9060L H, 9060L SH, 9070L H, 9070L L, 9070L L T5, 9070L SH, 9070M, 9080L, 9080L GE, 9080L H, 9080L SH, 9080N H, 9080N L, 9090L, 9090L GE, 9090L H, 9090L H T4, 9090L H T5, 9090L SH, 9090L SH T4, 9090L SH T5, 9090L T3, 9090X, 9090X GE, 9090X GE T3, 9090X GE T4, 9090X GE T5, 9090X H, 9090X H H, 9090X H T4, 9090X O, 9090X O GE, 9090X O GE T3, 9090X O GE T4, 9090X O GE T5, 9090X O H T4, 9090X O T3, 9090X O T4, 9090X O T5, 9090X OP, 9090X OP GE, 9090X T3, 9090X T4, 9090X T5, 5833, 5835, 5836, 5853, 5855, 5856, 5858, 5860, 5862, 5864, 5865, VL5060, VL5080, VL5090, VL530, VL540, VL550, VL570, VL600, VL6040, VL6050, VL6060, VL6070, VL6080, VL6090, VL610, VL620, VL630, VL640, VL660, VM3080, VM3080 AL, VM3090, VM340, VM370, VM4090, VM460, VN2080, VN2090, VN240, VN260, VN300, VX680, VX7090

REF.710B*

BRAUD PUXANDO de dentes para ESQUERDA CADEIA

Comp. 944029255,944005

7030L, 7030M, 7030M H, 8030L, 9030L, 9040L, 9040M, 9050L H, 9050L L, 9050L SH, 9060L, 9060L GE, 9060L H, 9060L SH, 9070L H, 9070L L, 9070L L T5, 9070L SH, 9070M, 9080L, 9080L GE, 9080L H, 9080L SH, 9080N H, 9080N L, 9090L, 9090L GE, 9090L H, 9090L H T4, 9090L H T5, 9090L SH, 9090L SH T4, 9090L SH T5, 9090L T3, 9090X, 9090X GE, 9090X GE T3, 9090X GE T4, 9090X GE T5, 9090X H, 9090X H H, 9090X H T4, 9090X O, 9090X O GE, 9090X O GE T3

REF.711F

azeitonas LONA direita, 9090 azeitonas

Comp. 84324502

9090X O, 9090X O GE, 9090X O GE T3, 9090X O GE T4, 9090X O GE T5, 9090X O H T4, 9090X O T3, 9090X O T4, 9090X O T5, 9090X OP, 9090X OP GE, VX7090

REF.711G

azeitonas ESQUERDA PARA COMPRAS, 9090 azeitonas

Comp. 84324501

9090X O, 9090X O GE, 9090X OP, 9090X OP GE, VX7090

Todas as marcas comerciais pertencem aos seus respectivos proprietários e seu uso é apenas para fins informativos.

WWW.EDUARDOREPUESTOSAGRICOLAS.COM

IVA não incluso

Transporte gratuito da UE para pedidos de 50

PATINS - GUIAS DESTEMADOR (ESPESSURA 26mm, 5mm MAIS que as referências)

SB, VL, VX (26mm, +5mm)

REF.254A

Comp. 944027443

SB33, SB35, SB36, SB53, SB55, SB56, SB58, SB60, SB62, SB64, SB65, VL5060, VL5080, VL5090, VL530, VL540, VL550, VL570, VL600, VL6040, VL6050, VL6060, VL6070, VL6080, VL6090, VL610, VL620,

REF.255A

Comp. 944030770

SB33, SB35, SB36, SB53, SB55, SB56, SB58, SB60, SB62, SB64, SB65, VL5060, VL5080, VL5090, VL530, VL540, VL550, VL570, VL600, VL6040, VL6050, VL6060, VL6070, VL6080, VL6090, VL610, VL620,

REF.256A

Comp. 944030771

SB33, SB35, SB36, SB53, SB55, SB56, SB58, SB60, SB62, SB64, SB65, VL5060, VL5080, VL5090, VL530, VL540, VL550, VL570, VL600, VL6040, VL6050, VL6060, VL6070, VL6080, VL6090, VL610, VL620,

REF.257A

Comp. 944030810

SB33, SB35, SB36, SB53, SB55, SB56, SB58, SB60, SB62, SB64, SB65, VL600, VL6040, VL6050, VL6060, VL6070, VL6080, VL6090, VL610, VL620, VL630, VL640, VL660, VM4090, VM460, VX680, VX7090

REF.258A

Comp. 944030811

SB33, SB35, SB36, SB53, SB55, SB56, SB58, SB60, SB62, SB64, SB65, VL600, VL6040, VL6050, VL6060, VL6070, VL6080, VL6090, VL610, VL620, VL630, VL640, VL660, VM4090, VM460, VX680, VX7090

REF.259A

Comp. 944030808

SB33, SB35, SB36, SB53, SB55, SB56, SB58, SB60, SB62, SB64, SB65, VL600, VL6040, VL6050, VL6060, VL6070, VL6080, VL6090, VL610, VL620, VL630, VL640, VL660, VM4090, VM460, VX680, VX7090

REF.260A

Comp. 944030809

SB33, SB35, SB36, SB53, SB55, SB56, SB58, SB60, SB62, SB64, SB65, VL600, VL6040, VL6050, VL6060, VL6070, VL6080, VL6090, VL610, VL620, VL630, VL640, VL660, VM4090, VM460, VX680, VX7090

REF.261A

Comp. 944027448 (94cm)

SB33, SB35, SB36, SB53, SB55, SB56, SB58, SB60, SB62, SB64, VL600, VL6040, VL6050, VL6060, VL6070, VL6080, VL6090, VL610, VL620, VL630, VL640, VL660, VM4090, VM460, VX680, VX7090

REF.261B

Comp. 944030102, 944030101 (84cm)

SB33, SB35, SB53, SB55, VL5060, VL5080, VL5090, VL530, VL540, VL550, VL570, VM3080, VM3090, VM340, VM370, VN2090, VN300

REF.266A

Comp. 944031960

SB36, SB56, SB58, SB60, SB62, SB64, SB65, VL600, VL6040, VL6050, VL6060, VL6070, VL6080, VL6090, VL610, VL620, VL630, VL640, VL660, VM4090, VM460, VX680, VX7090

REF.262A

Comp. KIT DE 87629867 (VL, SB, VX) 18 peças

4x254A, 2x255A, 2x256A, 2x257A, 2x258A, 2x259A, 2x260A, 2x266A

REF.262B

Comp. KIT DE 84122582 (VL, SB, VX) 16 peças

4x254A, 2x255A, 2x256A, 2x257A, 2x258A, 2x259A, 2x260A

SB33, SB35, SB55, VL5080, VL5090, VL530, VL540, VL550, VM340, VM380

REF.262C

Comp. KIT DE PARTES 16

4x254A, 2x255A, 2x256A, 2x581A, 2x582A, 2x583A, 2x583B

REF.581A

Comp. 944032089

SB33, SB35, SB53, SB55, VL5060, VL5080, VL5090, VL530, VL540, VL550, VL570, VM3080, VM3080 AL, VM3090, VM340, VM370, VN2090

REF.582A

Comp. 944030230

SB33, SB35, SB53, SB55, VL5060, VL5080, VL5090, VL530, VL540, VL550, VL570, VM3080, VM3080 AL, VM3090, VM340, VM370, VN2090

REF.583A

Comp. 944032090

SB33, SB35, SB53, SB55, VL5060, VL5080, VL5090, VL530, VL540, VL550, VL570, VM3080, VM3080 AL, VM3090, VM340, VM370, VN2090

REF.583B

Comp. 944030100

SB33, SB35, SB53, SB55, VL5060, VL5080, VL5090, VL530, VL540, VL550, VL570, VM3080, VM3080 AL, VM3090, VM340, VM370, VN2090

9040M, 9040L, 9060L, 9090L, 9080L,9090X

REF.264A

Comp. 84234229

7030L, 7030M, 7030M H, 8030L, 9030L, 9040L, 9040M, 9050L H, 9050L L, 9060L, 9060L GE, 9060L H, 9060L SH, 9070L H, 9070L L, 9070L L T5, 9070M, 9080L, 9080L GE, 9080L H, 9080L SH, 9090L, 9090L

REF.265A

Comp. 84248137

7030L, 7030M, 7030M H, 8030L, 9030L, 9040L, 9040M, 9050L H, 9050L L, 9060L, 9060L GE, 9060L H, 9060L SH, 9070L H, 9070L L, 9070L L T5, 9070M, 9080L, 9080L GE, 9080L H, 9080L SH, 9090L, 9090L

REF.266B

Comp. 84243927

7030L, 7030M, 7030M H, 8030L, 9040L, 9040M, 9060L, 9060L GE, 9060L H, 9060L SH, 9080L, 9080L GE, 9080L H, 9080L SH, 9090L, 9090L GE, 9090L H, 9090X, 9090X H, 9090X H H

REF.267A

Comp. 84248147

9040L, 9040M, 9080L, 9090L, 9090X

REF.268A

Comp. 84248148

7030L, 7030M, 7030M H, 8030L, 9040L, 9040M, 9060L, 9060L GE, 9060L H, 9060L SH, 9080L, 9080L GE, 9080L H, 9080L SH, 9090L, 9090L GE, 9090L H, 9090X, 9090X H, 9090X H H

REF.269A

Comp. KIT DE PARTES 18

12x264A, 2x265A, 4x266B

REF.719A

Comp. 84243939

7030L, 7030M, 7030M H, 8030L, 9040L, 9040M, 9060L, 9060L GE, 9060L H, 9060L SH, 9080L, 9080L GE, 9080L H, 9080L SH, 9090L, 9090L GE, 9090L H, 9090X, 9090X H, 9090X H H

REF.720A

Comp. 87483704

7030L, 7030M, 7030M H, 8030L, 9030L, 9040L, 9040M, 9050L H, 9050L L, 9050L SH, 9060L, 9060L GE, 9060L H, 9060L SH, 9070L H, 9070L L, 9070L L T5, 9070L SH, 9070M, 9080L, 9080L GE, 9080L H, 9080L SH, 9090L, 9090L GE, 9090L H, 9090L H T4, 9090L H T5, 9090L SH, 9090L SH T4, 9090L SH T5, 9090L T3, 9090X, 9090X GE, 9090X GE T3, 9090X GE T4, 9090X GE T5, 9090X H, 9090X H H, 9090X H T4, 9090X T3, 9090X T4, 9090X T5

REF.738A

Comp. 84287465

7030L, 7030M, 7030M H, 8030L, 9040L, 9040M, 9050L L, 9060L, 9060L GE, 9060L H, 9070L L, 9070L L T5, 9070M, 9080L, 9080L GE, 9080L H, 9080N H, 9080N L, 9090L, 9090L GE, 9090L H, 9090L H T4, 9090L H T5, 9090L T3, 9090X, 9090X H, 9090X H H

REF.738B

Comp. 84321487 KIT 48 Pcs.

12x264A, 2x265A, 4x266B, 1x267A, 1x267B, 4x719A, 24x738A

Todas as marcas comerciais pertencem aos seus respectivos proprietários e seu uso é apenas para fins informativos.

NYLON - GUIDES DESTEMMER (ESPESSURA 26mm, 6mm MAIS que as referências)

9070L L, 9050L H, 9050L L, 9070L H, 9030L H T4, 9070M, 9090X GE T4, 9090 H T4 (26mm , orig + 6mm)

REF.265A

Comp. 84248137

7030L, 7030M, 7030M H, 8030L, 9030L, 9040L, 9040M, 9050L H, 9050L L, 9060L, 9060L GE, 9060L H, 9060L SH, 9070L H, 9070L L, 9070L L T5, 9070M, 9080L, 9080L GE, 9080L H, 9080L SH, 9090L, 9090L

REF.269B

Comp. KIT (28 UDS)

2x265A, 4x741A, 2x741B, 2x741C, 4x741D, 2x741E, 2x741F, 8x741G, 1x742C, 1x742D

REF.741A

Comp. 47966974

9030L, 9050L H, 9050L L, 9070L H, 9070L L, 9070L L T5, 9070M, 9090L H T4, 9090L H T5, 9090L T3, 9090X H T4, 9090X T3, 9090X T4, 9090X T5

REF.741B

Comp. 51417647

9050L H, 9050L L, 9070L H, 9070L L, 9070L L T5, 9090L H T4, 9090L H T5, 9090L T3, 9090X H T4, 9090X T3, 9090X T4, 9090X T5

REF.741C

Comp. 51417695

9050L H, 9050L L, 9070L H, 9070L L, 9070L L T5, 9090L H T4, 9090L H T5, 9090L T3, 9090X H T4, 9090X T3, 9090X T4, 9090X T5

REF.741D

Comp. 51417642

9050L H, 9050L L, 9070L H, 9070L L, 9070L L T5, 9090L H T4, 9090L H T5, 9090L T3, 9090X H T4, 9090X T3, 9090X T4, 9090X T5

REF.741E

Comp. 51417655

9050L H, 9050L L, 9070L H, 9070L L, 9070L L T5, 9090L H T4, 9090L H T5, 9090L T3, 9090X H T4, 9090X T3, 9090X T4, 9090X T5

REF.741F

Comp. 51417665

9050L H, 9050L L, 9070L H, 9070L L, 9070L L T5, 9090L H T4, 9090L H T5, 9090L T3, 9090X H T4, 9090X T3, 9090X T4, 9090X T5

REF.741G

Comp. 51417653

9050L H, 9050L L, 9070L H, 9070L L, 9070L L T5, 9090L H T4, 9090L H T5, 9090L T3, 9090X H T4, 9090X T3, 9090X T4, 9090X T5

REF.742C

Comp. 48145277

9030L, 9050L H, 9050L L, 9070L H, 9070L L, 9070L L T5, 9070M, 9090L H T4, 9090L H T5, 9090L T3, 9090X H T4, 9090X T3, 9090X T4, 9090X T5

REF.742D

Comp. 48145279

9030L, 9050L H, 9050L L, 9070L H, 9070L L, 9070L L T5, 9070M, 9090L H T4, 9090L H T5, 9090L T3, 9090X H T4, 9090X T3, 9090X T4, 9090X T5

9090X OLIVE — ANTI - AÇO DE FRICÇÃO

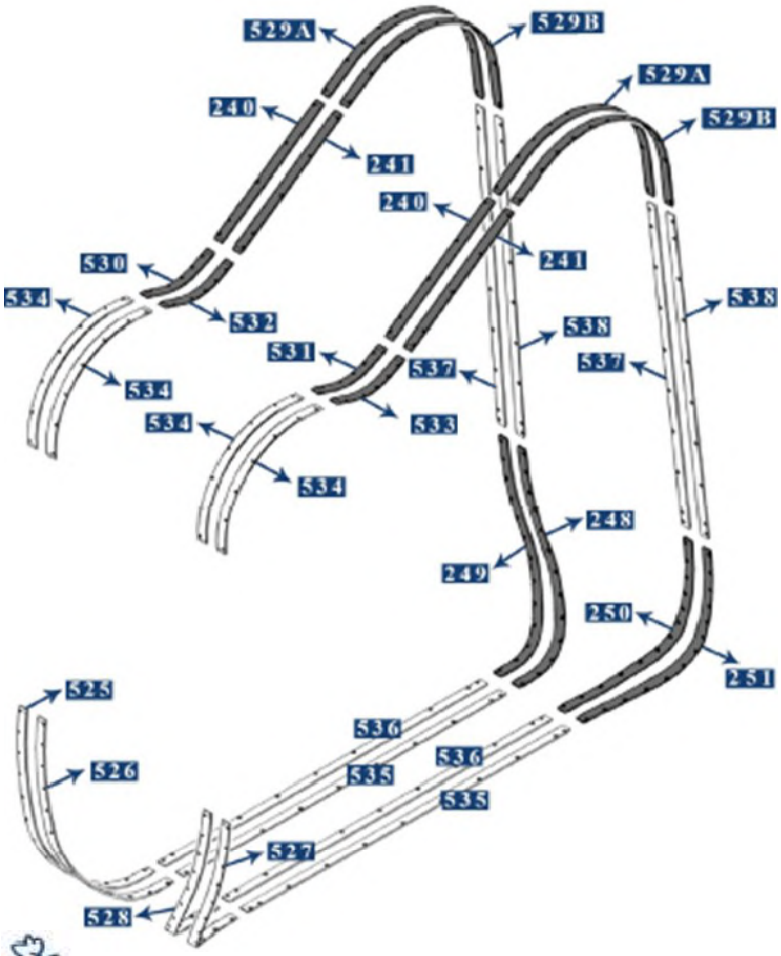

	FRENTE	
REF.525	Exterior esquerda	Comp. 87486375
REF.526	No interior esquerdo	Comp. 87486377
REF.527	Direita fora	Comp. 87486376
REF.528	Direita fora	Comp. 87486378
	TRASEIRA	
REF.248	No interior esquerdo	Comp. 944023837
REF.249	Exterior esquerda	Comp. 944023838
REF.250	Direita dentro	Comp. 944023835
REF.251	Direita fora	Comp. 944023836
	OUTRO	
REF.529A	Curva traseira direita	Comp. 944020859
REF.529B	Curva traseira esquerda	Comp. 944024537
REF.240	Direito superior direito	Comp. 944015638
REF.241	Colocaram superior direito	Comp. 944015639
REF.530	Curva carreto esquerdo	Comp. 84391127
REF.531	Curva carreto esquerdo	Comp. 84391129
REF.532	Curva pinhão direita	Comp. 84391128
REF.533	Curva pinhão direita	Comp. 84391130
REF.534	curva da frente	Comp. 84391069
REF.535	Longa reta de fundo	Comp. 87486373
REF.536	Longa reta de fundo	Comp. 87486374
REF.537	Reta longa laterais	Comp. 944020862
REF.538	Reta longa laterais	Comp. 944020863
REF.539	KIT DE PARTES 16	
	1x248 1x249 1x250 1x251 2x529A	2x529B 2x240 2x241
	1x530 1x531 1x532 1x533	
REF.543A	KIT 8 peças	
	1x525 1x526 1x527 1x528 1x248	1x249 1x250 1x251
REF.543C	KIT 24 peças	
	1x525 1x526 1x527 1x528 1x248	1x249 1x250 1x251
	2x529A 2x529B 2x240 2x241	1x530 1x531 1x532
	1x533 4x534	

Todas as marcas comerciais pertencem aos seus respectivos proprietários e seu uso é apenas para fins informativos.

Verifique a Ref. Antes.

WWW.EDUARDOREPUESTOSAGRICOLAS.COM

IVA não incluso

ratuito da UE para pedidos de 500€

7090X OLIVE

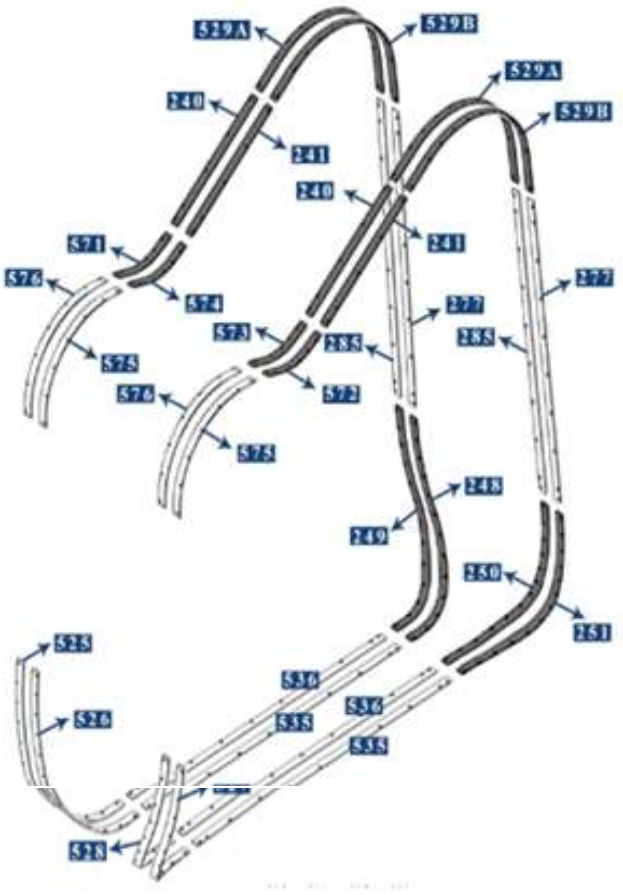

	FRENTE	
REF.525	Exterior esquerda	Comp. 87486375
REF.526	No interior esquerdo	Comp. 87486377
REF.527	Direita fora	Comp. 87486376
REF.528	Direita fora	Comp. 87486378
	TRASEIRA	
REF.248	No interior esquerdo	Comp. 944023837
REF.249	Exterior esquerda	Comp. 944023838
REF.250	Direita dentro	Comp. 944023835
REF.251	Direita fora	Comp. 944023836
	OUTRO	
REF.529A	Curva traseira direita	Comp. 944020859
REF.529B	Curva traseira esquerda	Comp. 944024537
REF.240	Direito superior direito	Comp. 944015638
REF.241	Colocaram superior direito	Comp. 944015639
REF.571	Curva carreto esquerdo	Comp. 87499779
REF.572	Curva carreto esquerdo	Comp. 87499781
REF.573	Curva pinhão direita	Comp. 87499780
REF.574	Curva pinhão direita	Comp. 87499778
REF.575	Curva dianteira direita	Comp. 944032892
REF.576	Esquerda curva dianteira	Comp. 944032893
REF.535	Longa reta de fundo	Comp. 87486373
REF.536	Longa reta de fundo	Comp. 87486374
REF.285	Reta longa laterais	Comp. 944020863
REF.277	Reta longa laterais	Comp. 944020862
REF.543A	KIT 8 peças	1x525 1x526 1x527 1x528 1x248 1x249 1x250 1x251
REF.577	KIT DE PARTES 16	1x248 1x249 1x250 1x251 1x571 1x572 1x573 1x574 2x529A 2x529B 2x240 2x241
REF.543B	KIT 24 peças	1x525 1x526 1x527 1x528 1x248 1x249 1x250 1x251 2x529 2x529B 2x240 2x241

9090X

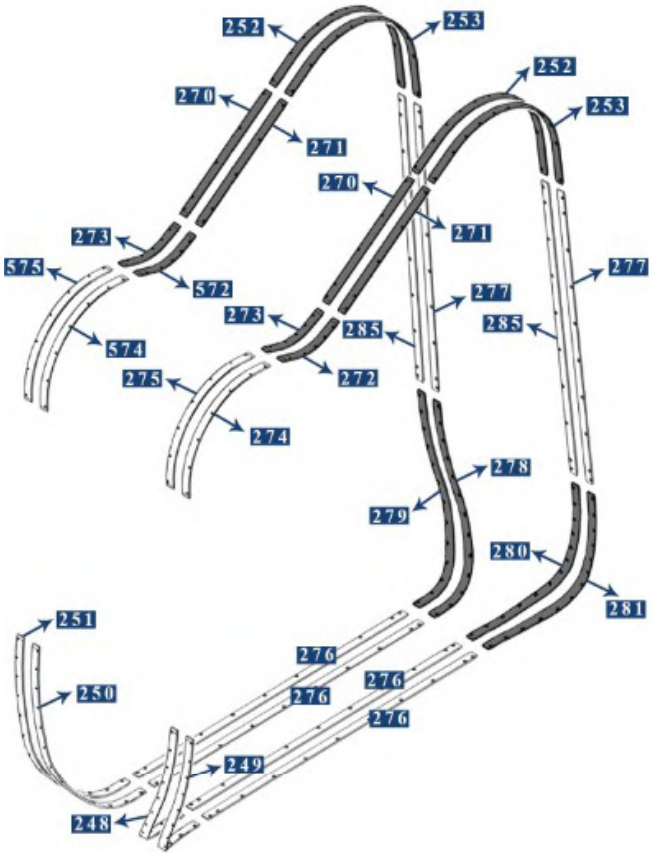

	FRENTE	
REF.248	No interior esquerdo	Comp. 944023837
REF.249	Exterior esquerda	Comp. 944023838
REF.250	Direita dentro	Comp. 944023835
REF.251	Direita fora	Comp. 944023836
	TRASEIRA	
REF.278	No interior esquerdo	Comp. 944020882
REF.279	Exterior esquerda	Comp. 944020880
REF.280	Direita dentro	Comp. 944020883
REF.281	Direita fora	Comp. 944020881
	OUTRO	
REF.252	Curva traseira direita	Comp. 84470244
REF.253	Curva traseira esquerda	Comp. 84470245
REF.270	Direito superior direito	Comp. 87644834
REF.271	Colocaram superior direito	Comp. 87644833
REF.272	Curva carreto esquerdo	Comp. 87644822
REF.273	Curva pinhão direita	Comp. 87644823
REF.274	Curva dianteira direita	Comp. 84478586
REF.275	Esquerda curva dianteira	Comp. 84478585
REF.276	Longa reta de fundo	Comp. 944020750
REF.285	Reta longa laterais	Comp. 944020863
REF.277	Reta longa laterais	Comp. 944020862
REF.542A	KIT 8 peças	1x248 1x249 1x250 1x251 1x278 1x279 1x280 1x281
REF.523A	KIT DE PARTES 16	1x278 1x279 1x280 1x281 2x252 2x253 2x270 2x271 2x272 2x273
REF.542C	KIT 24 peças	1x248 1x249 1x250 1x251 1x278 1x279 1x280 1x281

NEW HOLLAND-BRAUD COMPATIBLE

EDUARDO

9040L, 9060L, 9080L, 9090L, 9040M

FRENTE/TRASEIRA

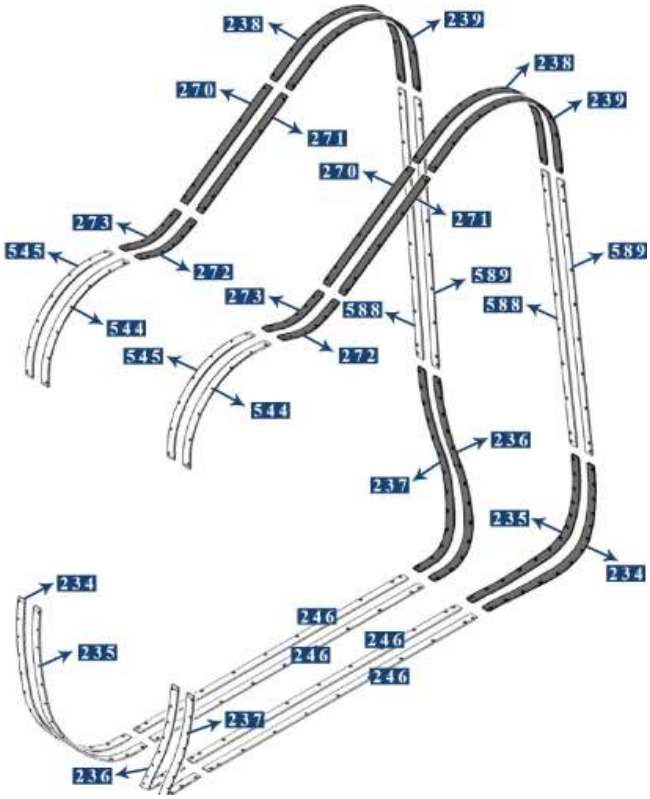

REF.234	Fora direita / esquerda	Comp. 944006223
REF.235	Dentro esquerda / direita	Comp. 944006222
REF.236	Dentro direita / esquerda	Comp. 944006220
REF.237	Fora esquerda / direita	Comp. 944006221
REF.238	Curva traseira direita	Comp. 944013735
REF.239	Curva traseira esquerda	Comp. 944013736
REF.270	Direito superior direito	Comp. 87644834
REF.271	Colocaram superior direito	Comp. 87644833
REF.272	Curva carreto esquerdo	Comp. 87644822
REF.273	Curva pinhão direita	Comp. 87644823
REF.544	Curva dianteira direita	Comp. 87644825
REF.545	Esquerda curva dianteira	Comp. 87644824
REF.246	Longa reta de fundo	Comp. 944005797
REF.588	Reta longa laterais	Comp. 944027192
REF.589	Reta longa laterais	Comp. 944027193
REF.541A	KIT 8 peças	2x234 2x235 2x236 2x237
REF.544A	KIT DE PARTES 16	1x234 1x235 1x236 1x237 2x238 2x239 2x270 2x271 2x272 2x273
REF.541D	KIT 24 peças	2x234 2x235 2x236 2x237 2x238 2x239 2x270 2x271 2x272 2x273 2x544 2x545

SB36 OPÇÃO 1 SB56, SB58, SB60, SB62, SB64

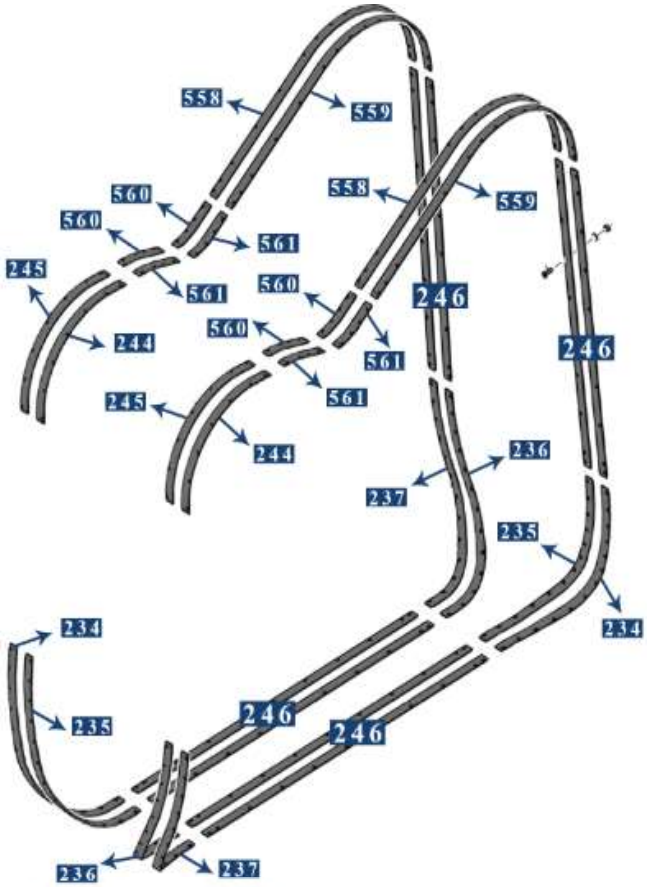

REF.234	Fora direita / esquerda	Comp. 944006223
REF.235	Dentro esquerda / direita	Comp. 944006222
REF.236	Dentro direita / esquerda	Comp. 944006220
REF.237	Fora esquerda / direita	Comp. 944006221
REF.558	Curva traseira direita	Comp. 944007948
REF.559	Esquerda curva traseira	Comp. 944007949
REF.560	Curva pinhão direita	Comp. 944007945
REF.561	Esquerda pinhão curva	Comp. 944007944
REF.244	Esquerda curva dianteira	Comp. 944007947
REF.245	Curva dianteira direita	Comp. 944007946
REF.246	Longa reta de fundo	Comp. 944005797
REF.541A	KIT 8 peças	2x234 2x235 2x236 2x237
REF.522B	KIT DE PARTES 9965156 16	1x234 1x235 1x236 1x237 2x558 2x559 4x560 4x561
REF.541E	KIT 24 peças	2x234 2x235 2x236 2x237 2x558 2x559 4x560 4x561 2x244 2x245

Todas as marcas comerciais pertencem aos seus respectivos proprietários e seu uso é apenas para fins informativos.

IVA não incluso

Verifique a Ref. Antes.

WWW.EDUARDOREPUESTOSAGRICOLAS.COM

porte gratuito da UE para pedidos de 500€

NEW HOLLAND-BRAUD COMPATIBLE

EDUARDO

SB33, SB35, SB53, SB55

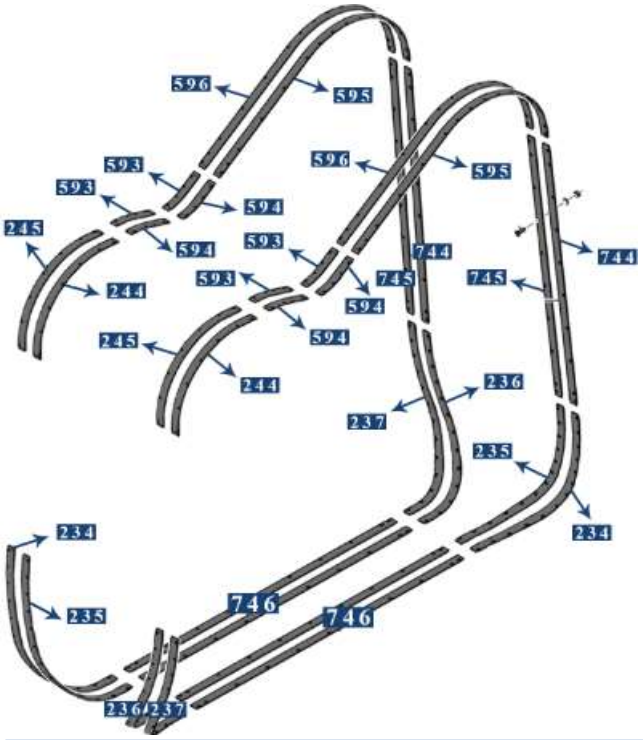

REF.234	Fora direita / esquerda	Comp. 944006223
REF.235	Dentro esquerda / direita	Comp. 944006222
REF.236	Dentro direita / esquerda	Comp. 944006220
REF.237	Fora esquerda / direita	Comp. 944006221
REF.596	Curva traseira direita	Comp. 944013294
REF.595	Esquerda curva traseira	Comp. 944013295
REF.594	Curva pinhão direita	Comp. 3 x Ø
REF.593	Esquerda pinhão curva	Comp. 3 x Ø
REF.244	Esquerda curva dianteira	Comp. 944007947
REF.245	Curva dianteira direita	Comp. 944007946
REF.744	Reta longa laterais	Comp. 944013298
REF.745	Reta longa laterais	Comp. 944013299
REF.746	reta de fundo	Comp. 944009291
REF.541A	KIT 8 peças	2x234 2x235 2x236 2x237
REF.522C	KIT DE 20 PARTES 9964808	Comp. - 2x234 2x235 2x236 2x237 2x596 2x595 4x594 4x593
REF.541F	KIT 24 peças	2x234 2x235 2x236 2x237 2x596 2x595 4x594 4x593 2x244 2x245

VX7090, VX680, SB65

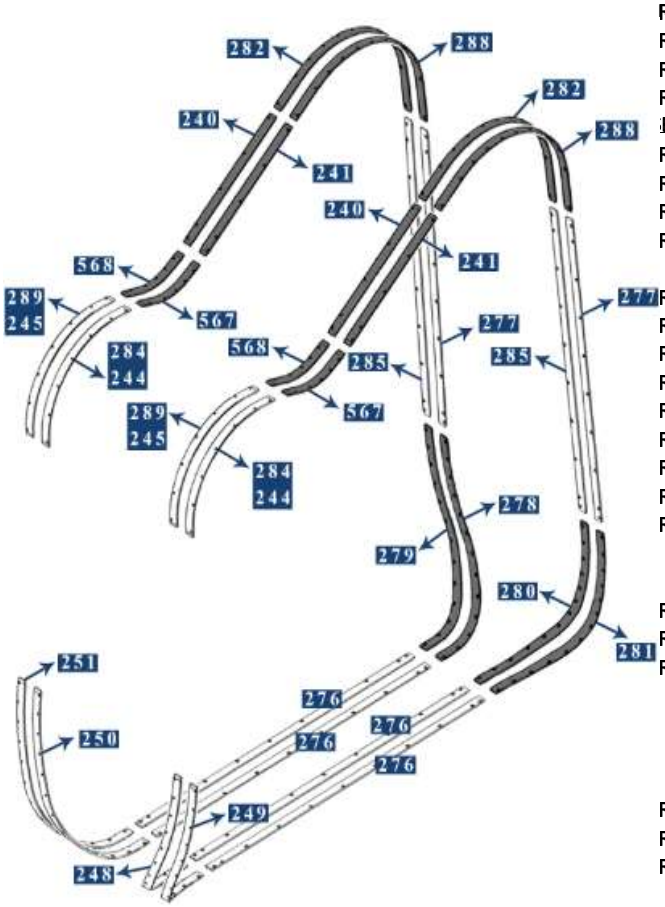

	FRENTE	
REF.248	No interior esquerdo	Comp. 944023837
REF.249	Exterior esquerda	Comp. 944023838
REF.250	Direita dentro	Comp. 944023835
REF.251	Direita fora	Comp. 944023836
	TRAS	
REF.278	No interior esquerdo	Comp. 944020882
REF.279	Exterior esquerda	Comp. 944020880
REF.280	Direita dentro	Comp. 944020883
REF.281	Direita fora	Comp. 944020881
	OUTRO	
REF.282	Curva traseira direita	Comp. 944020859
REF.288	Curva traseira esquerda	Comp. 944024537
REF.240	Direito superior direito	Comp. 944015638
REF.241	Colocaram superior direito	Comp. 944015639
REF.567	Curva carreto esquerdo	Comp. 944015993
REF.568	Curva pinhão direito	Comp. 944015994
REF.276	Longa reta de fundo	Comp. 944020750
REF.285	Reta longa laterais	Comp. 944020863
REF.277	Reta longa laterais	Comp. 944020862
	VX7090 / VX680	
REF.284	Curva dianteira direita	Comp. 944032892
REF.289	Dianteiro esquerdo curva ext	Comp. 944032893
REF.542B	KIT 24 peças	1x248 1x249 1x250 1x251 1x278 1x279 1x280 1x281 2x282 2x288 2x240 2x241 2x567 2x568 2x284 2x289
	SB65	
REF.244	Esquerda curva dianteira	Comp. 944007947
REF.245	Curva dianteira direita	Comp. 944007946
REF.542A	KIT 8 peças	1x248 1x249 1x250 1x251 1x278 1x279 1x280 1x281
REF.524	KIT DE PARTES 16	1x278 1x279 1x280 1x281 2x282 2x288 2x240 2x241 2x567 2x 568
REF.542D	KIT 24 peças	1x248 1x249 1x250 1x251 1x278 1x279 1x280 1x281 2x282 2x288 2x240 2x241 2x567 2x568 2x244 2x245

IVA não incluso

Transporte gratuito da UE para pedidos de 500€

Todas as marcas comerciais pertencem aos seus respectivos proprietários e seu uso é apenas para fins informativos.

NEW HOLLAND-BRAUD COMPATIBLE

EDUARDO

VL600, VL6040, VL6050, VL6060, VL6070, VL6080, VL6090, VL610, VL620, VL630, VL640, VL660 — OPÇÃO 2 — SB56, SB58, SB60, SB62, SB64

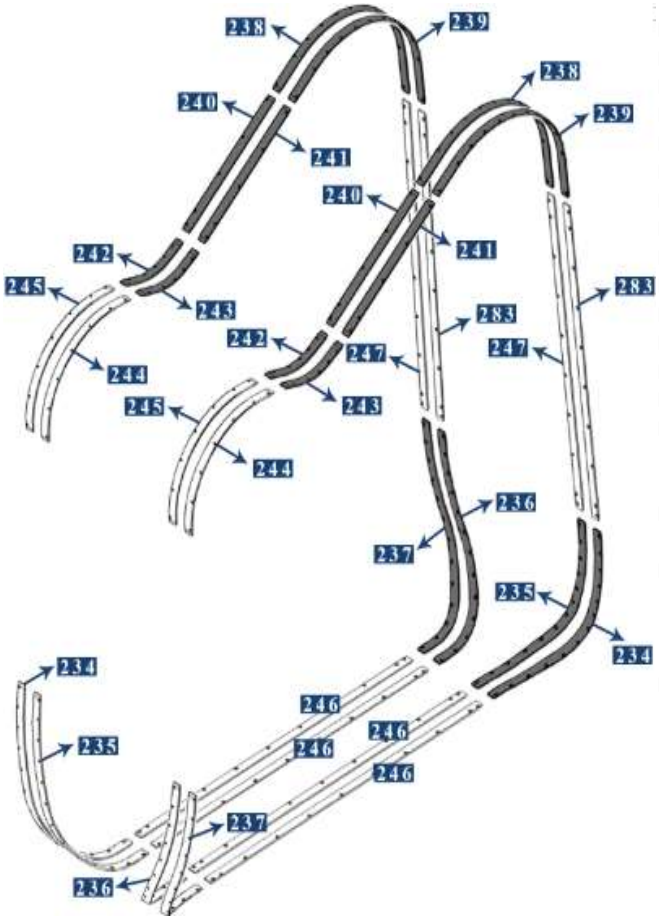

FRENTE/TRASEIRA

REF.234	Fora direita / esquerda	Comp. 944006223
REF.235	Dentro esquerda / direita	Comp. 944006222
REF.236	Dentro direita / esquerda	Comp. 944006220
REF.237	Fora esquerda / direita	Comp. 944006221
REF.238	Curva traseira direita	Comp. 944013735
REF.239	Curva traseira esquerda	Comp. 944013736
REF.240	Direito superior direito	Comp. 944015638
REF.241	Colocaram superior direito	Comp. 944015639
REF.242	Curva carreto esquerdo	Comp. 944022396
REF.243	Curva pinhão direito	Comp. 944022397
REF.244	Esquerda curva dianteira	Comp. 944007947
REF.245	Curva dianteira direita	Comp. 944007946
REF.246	Longa reta de fundo	Comp. 944005797
REF.247	Linear laterais longo	Comp. 944015929
REF.283	Linear laterais longo	Comp. 944015930
REF.541A	KIT 8 peças	2x234 2x235 2x236 2x237
REF.522A	KIT DE PARTES 16	1x234 1x235 1x236 1x237 2x238 2x239 2x240 2x241 2X242 2X243
REF.541B	KIT 24 peças	2x234 2x235 2x236 2x2387 2x238 2x239 2x240 2x241 2x242 2x243 2x244 2x245

VL5060, VL5080, VL5090, VL530, VL540, VL550, VL570

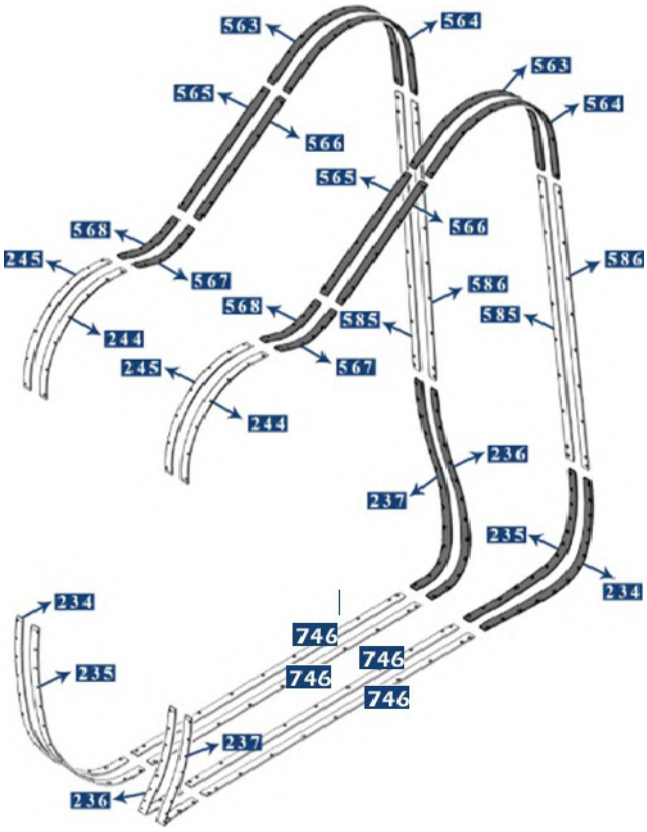

FRENTE/TRASEIRA

REF.234	Fora direita / esquerda	Comp. 944006223
REF.235	Dentro esquerda / direita	Comp. 944006222
REF.236	Dentro direita / esquerda	Comp. 944006220
REF.237	Fora esquerda / direita	Comp. 944006221
REF.563	Curva traseira direita	Comp. 944015982
REF.564	Curva traseira esquerda	Comp. 944015983
REF.565	Direito superior direito	Comp. 944015712
REF.566	Esquerda canto superior direito	Comp. 944015713
REF.567	Curva carreto esquerdo	Comp. 944015993
REF.568	Curva pinhão direito	Comp. 944015994
REF.244	Esquerda curva dianteira	Comp. 944007947
REF.245	Curva dianteira direita	Comp. 944007946
REF.746	reta de fundo	Comp. 944009291
REF.585	Reta longa laterais	Comp. 944015616
REF.586	Reta longa laterais	Comp. 944015617
REF.541A	KIT 8 peças	2x234 2x235 2x236 2x237
REF.569	KIT DE 16 PARTES	1x234 1x235 1x236 1x237 2x563 2x564 2x565 2x566 2x567 2x568
REF.541C	KIT 24 peças	2x234 2x235 2x263 2x237 2x558 2x559 4x560 4x561 2x244 2x245

Todas as marcas comerciais pertencem aos seus respectivos proprietários e seu uso é apenas para fins informativos.

IVA não incluso

Verifique a Ref. Antes.

WWW.EDUARDOREPUESTOSAGRICOLAS.COM

Transporte gratuito da UE para pedidos de 500€

FABRICAÇÃO DE NOVOS DEFLETORES TRASEIROS (transporte não incluído)

GUIA CEPA
ESQUERDA/DIREITA

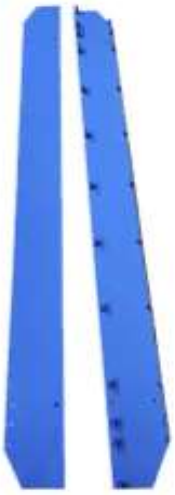

SUELA

DEFLETOR TRASEIRO
ESQUERDA/DIREITA

DEFLETOR DIANTEIRO
ESQUERDA/DIREITA

SB36, SB53, SB55, SB56, SB58, SB60, SB62, SB64, VL5060, VL5080, VL5090, VL530, VL540, VL550, VL570

REF.701A	TRASEIRO DEFLECTOR DIREITO	Comp. 944015273
REF.702A	TRASEIRO DEFLECTOR ESQUERDA	Comp. 944015274
REF.703A	KIT TRASEIRO DEFLECTOR direita +	Comp. 9965152

9030L, 9040L, 9040M, 9060L, 9060L GE, 9060L H, 9060L SH, 9080L, 9080L GE, 9080L H, 9080L SH, 9090L, 9090L GE, 9090L H, 9090L SH, SB36, SB56, SB58, SB60, SB62, SB64, VL600, VL6040, VL6050, VL6060, VL6070, VL6080, VL6090, VL610, VL620, VL630, VL640, VL660, VM4090, VM460

REF.701C	CEPA GUIA DE DIREITO	Comp. 944011412
REF.702C	CEPA GUIA PARA A ESQUERDA	Comp. 944011411
REF.701D	BASE	Comp. 944005585

7030L, 8030L, 9030L, 9040L, 9050L H, 9050L L, 9050L SH, 9060L, 9060L GE, 9060L H, 9060L SH, 9070L H, 9070L L, 9070L L T5, 9070L SH, 9080L, 9080L GE, 9080L H, 9080L SH, 9090L, 9090L GE, 9090L H, 9090L H T4, 9090L H T5, 9090L SH, 9090L SH T4, 9090L SH T5, 9090L T3

REF.704D	TRASEIRO DEFLECTOR DIREITO	Comp. 84243748
REF.705D	TRASEIRO DEFLECTOR ESQUERDA	Comp. 84243747
REF.703A	KIT TRASEIRO DEFLECTOR direita +	Comp. 9965152 (84589775)
REF.704C	FRENTE DEFLECTOR DIREITO	Comp. 87648911
REF.705C	FRENTE ESQUERDA DEFLECTOR	Comp. 87648899
REF.705E	KIT (2 frente deflector + 2cepa guias + 2bases)	Comp. 48061238

VL600, VL6040, VL6050, VL6060, VL6070, VL6080, VL6090, VL610, VL620, VL630, VL640, VL660, VM4090, VM460

REF.704A	TRASEIRO DEFLECTOR DIREITO	Comp. 944031305
REF.705A	TRASEIRO DEFLECTOR ESQUERDA	Comp. 944031304
REF.706A	KIT TRASEIRO DEFLECTOR direita +	Comp. 84126212
REF.704B	FRENTE DEFLECTOR DIREITO	Comp. 944031303
REF.705B	FRENTE ESQUERDA DEFLECTOR	Comp. 944031302
REF.706B	KIT (2 frente deflector + 2cepa guias + 2bases)	Comp. 47384999

SB36, SB56, SB58, SB60, SB62, SB64

REF.701B	FRENTE DEFLECTOR DIREITO	Comp. 944006752
REF.702B	FRENTE ESQUERDA DEFLECTOR	Comp. 944006751
REF.703B	KIT (2 frente deflector + 2cepa guias + 2bases)	Comp. 84354860

SB33, SB35, SB53, SB55, VL5060, VL5080, VL5090

REF.701BB	FRENTE DEFLECTOR DIREITO	Comp. 944012193
REF.702BB	FRENTE ESQUERDA DEFLECTOR	Comp. 944012194
REF.703BB	KIT (2 frente deflector + 2cepa guias + 2bases)	Comp. 84589810

SB65, VX680, VX7090

REF.707A	TRASEIRO DEFLECTOR DIREITO	Comp. 944031759
REF.708A	TRASEIRO DEFLECTOR ESQUERDA	Comp. 944031760
REF.709A	KIT TRASEIRO DEFLECTOR direita +	Comp. 87629911
REF.707B	FRENTE DEFLECTOR DIREITO	Comp. 944033616
REF.708B	FRENTE ESQUERDA DEFLECTOR	Comp. 944033603
REF.707C	CEPA GUIA DE DIREITO	Comp. 944020671
REF.708C	CEPA GUIA PARA A ESQUERDA	Comp. 944020670
REF.707D	BASE	Comp. 944020654
REF.709B	KIT (2 frente deflector + 2cepa guias + 2bases)	Comp. -

VL5060, VL5080, VL5090, VL530, VL540, VL550, VL570

REF.701G	FRENTE DEFLECTOR DIREITO	Comp. 944032672
REF.702E	FRENTE ESQUERDA DEFLECTOR	Comp. 944032671
REF.701E	GUIA CEP DROITE	Comp. 944009292
REF.702D	GUIA CEP GAUCHE	Comp. 944009293
REF.701F	BASE	Comp. 944009296

IVA não incluso
Transporte gratuito da UE para pedidos de 500€

Todas as marcas comerciais pertencem aos seus respectivos proprietários e seu uso é apenas para fins informativos.

9090X O, 9090X O GE, 9090X O GE T3, 9090X O GE T4, 9090X O GE T5, 9090X O H T4, 9090X O T3, 9090X O T4, 9090X O T5, 9090X OP, 9090X OP GE, VX7090

REF.707G	TRASEIRO DEFLECTOR DIREITO	Comp. 87690491
REF.708F	TRASEIRO DEFLECTOR ESQUERDA	Comp. 87690490
REF.709D	KIT TRASEIRO DEFLECTOR direita +	Comp. 47523030
REF.707H	FRENTE DEFLECTOR DIREITO	Comp. 87683713
REF.708G	FRENTE ESQUERDA DEFLECTOR	Comp. 87683714
REF.707J	CEPA GUIA DE DIREITO	Comp. 87486382
REF.708H	CEPA GUIA PARA A ESQUERDA	Comp. 87486381
REF.707K	BASE DIREITO	Comp. 87486388
REF.707L	BASE PARA A ESQUERDA	Comp. 87486379

9090X, 9090X GE, 9090X H, 9090X H H

REF.708J	TRASEIRO DEFLECTOR DIREITO	Comp. 84470410
REF.708K	TRASEIRO DEFLECTOR ESQUERDA	Comp. 84470411
REF.709E	KIT TRASEIRO DEFLECTOR direita +	Comp. 84470644
REF.707N	FRENTE DEFLECTOR DIREITO	Comp. 84470376
REF.708D	FRENTE ESQUERDA DEFLECTOR	Comp. 84470377
REF.707E	CEPA GUIA DE DIREITO	Comp. 84479820
REF.708E	CEPA GUIA PARA A ESQUERDA	Comp. 84479821
REF.707F	BASE	Comp. 944020654
REF.709C	KIT (2 frente deflector + 2cepa guias + 2bases)	Comp. -

GORDURAS DE VENDA ESPECIAIS

GORDURAS DE LÍTIO

PARA LUBRIFICAÇÃO MANUAL - NÍVEL DE FLUIDEZ "2" (ESPESSO)

REF.401D LITKEN EP2 (com aditivoss PE) (5 kg posso)

REF.401E LITKEN EP2 (com aditivoss PE) cartucho 420m.l.

PARA LUBRIFICAÇÃO AUTOMÁTICA - NÍVEL "00" FLUIDOS (LÍQUIDO)

REF.401F LITKEN EP00 (com aditivoss PE) (5 kg posso)

ALIMENTOS GORDURA

PARA LUBRIFICAÇÃO MANUAL - NÍVEL DE FLUIDEZ "2" (ESPESSO)

REF.407B ULTRAPLEX FG2 (posso 5 kg)

REF.403D ULTRAPLEX FG2 cartucho 420m.l

PARA LUBRIFICAÇÃO AUTOMÁTICA - NÍVEL "00" FLUIDOS (LÍQUIDO)

REF.407E ULTRAPLEX FG00 (posso 5 kg)

ÓLEOS

REF.512A MOTOR OIL AMBRA MASTERGOLD HSP
MASTERGOLD HSP 5 l

HSP SAE 15W - 40NH 330 HSP

REF.512B MOTOR OIL AMBRA MASTERGOLD HSP
MASTERGOLD HSP 20 l

HSP SAE 15W - 40NH 330 HSP

REF.513A ÓLEO HIDRÁULICO AMBRA
HYDROSYSTEM 68 20 l

REF.513H ÓLEO HIDRÁULICO AMBRA
HYDROSYSTEM 68 5 l

REF.514A ANTICONGELANTE AMBRA AGRIFLU
AGRIFLU MIX 5 l

NH 900B

Todas as marcas comerciais pertencem aos seus respectivos proprietários e seu uso é apenas para fins informativos.

FILTRO — VL (VL600, VL6040, VL6050, VL6060, VL6070, VL6080, VL6090, VL610, VL620, VL630, VL640, VL660)

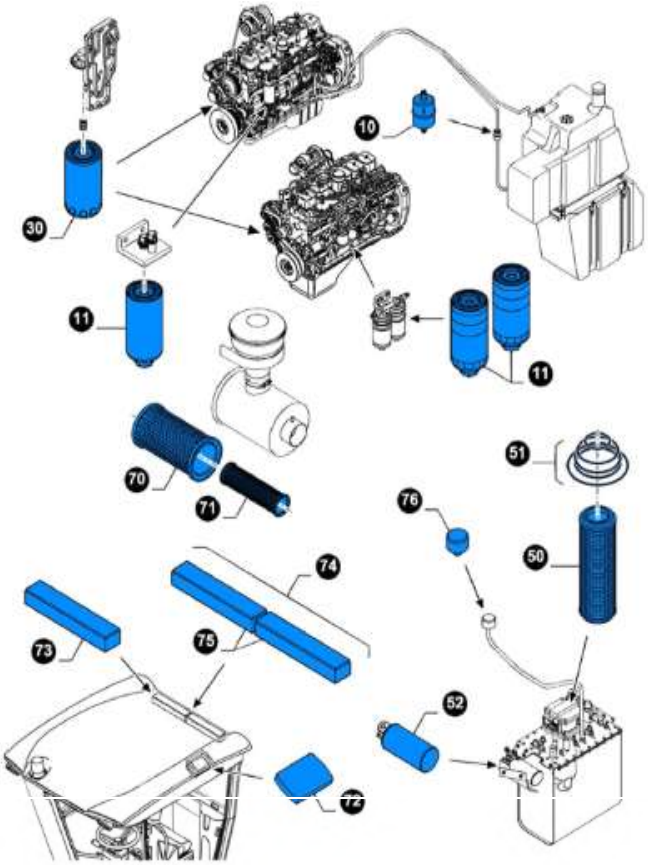

		COMBUSTÍVEL	
REF.515A	10	(10) PRÉ-FILTRO GASOIL	Comp. 87400394, D139225
REF.515B	11	(11) F.GASOIL	Comp. 2852693, 87803192
REF.515C	11	(11) F.GASOIL	Comp. 1902138
REF.515D	11	(11) F.GASOIL	Comp. 84209753, 84526251
		ÓLEO	
REF.516A	30	(30) F.ENGINE	Comp. 2852526, 87803260
REF.516B	30	(30) F.ENGINE	Comp. 4897898, 84228488
		HIDRÁULICO	
REF.599A	50	(50) F.HYDRAULIC	Comp. 9964918
REF.722A	51	(51) anel de segurança	Comp. 87547082
REF.599C	52	(52) F. hydraul. RETORNA	Comp. 9964728
		AR	
REF.597B	70	(70) F. JUSTA	Comp. 9965158, 87682973
REF.597D	71	(71) F. JUSTA	Comp. 9965159, 87682972
		CABINE	
REF.597T	72	(72) F. CABINE	Comp. 84607214
REF.597M	73	(73) F. JUSTA	Comp. 944028550
REF.597E	74	(74) KIT F. CABINE 2UD	Comp. 713008035
REF.597F	75	(75) F. CARBONO CABINE	Comp. 944032451
REF.597G	76	(76) F. PULL	Comp. 920018819

FILTRO — 9040L, 9060L, 9080L, 9090L, 9090X, 9090X OLIVE

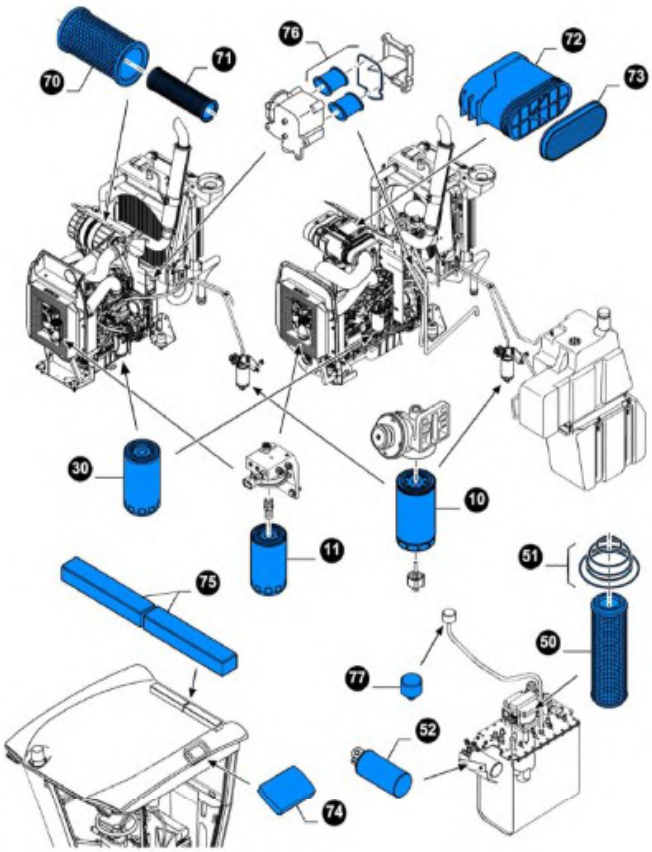

		COMBUSTÍVEL	
REF.515R	10	PRÉ-FILTRO	Comp. 87533313, 87592170
REF.515S	10	(10) PRÉ-FILTRO	Comp. 84337371, 84348882
REF.515T	11	(11) F. GASOIL	Comp. 4897897, 73332236
		ÓLEO	
REF.516C	30	(30) F. MOTOR	Comp. 4897898, 84228488
		HIDRÁULICO	
REF.599A	50	(50) F.HYDRAULIC	Comp. 9964918
REF.722A	51	(51) anel de segurança	Comp. 87547082
REF.599C	52	(52) F. hydraul. RETORNA	Comp. 9964728
		AR	
REF.597P	70	(70) F. JUSTA	Comp. 87704244
REF.597Q	71	(71) F. JUSTA	Comp. 87682992
		CABINE	
REF.597R	72	(72) F. JUSTA	Comp. 87687267
REF.597S	73	(73) F. JUSTA	Comp. 87687268
REF.597T	74	(72) F. CABINE	Comp. 84607214
REF.597M	75	(73) F. JUSTA	Comp. 944028550
REF.597E	75	(74) KIT F. CABINE 2UD	Comp. 713008035
REF.597U	76	(76) FILTRE	Comp. 2992447
REF.597I	77	(77) F. PULL	Comp. 920018819

FILTRO SB (SB56, SB58, SB60, SB64, SB65)

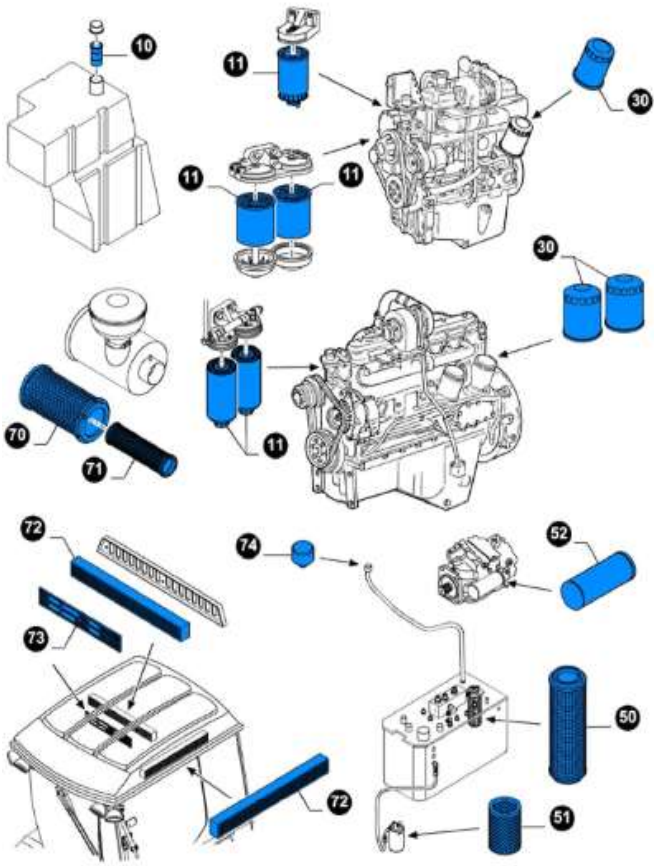

		COMBUSTÍVEL	
REF.724A	10	(10) ELEMENTO	Comp. 944010988=47385140
REF.515H	11	(11) F.GASOIL	Comp. 1930010, 471357706, 842214564
REF.515J	11	(11) F.GASOIL	Comp. 1909100
REF.516E	30	(30) F.ENGINE	Comp. 1931047
		ÓLEO	
REF.516D	30	(30) F.ENGINE	Comp. 1909102, 84221215
REF.516F	30	(30) F.ENGINE	Comp. 87803260, 84228488
		HIDRÁULICO	
REF.599B	50	(50) F.HYDRAULIC	Comp. 920018520
REF.599C	51	(52) F. hydraul. RETORNA	Comp. 9964728
REF.599D	52	(52) F.HYDRAULIC	Comp. 920018543
REF.599E	52	(52) F.HYDRAULIC	Comp. 920019190
		AR	
REF.597B	70	(70) F. JUSTA	Comp. 9965158, 87682973
REF.597A	70	(70) F. JUSTA	Comp. 1930784, 87682973
REF.723A	71	(71) JUSTA	Comp. 1909964
REF.597C	71	(71) F. JUSTA	Comp. 1930790
REF.597D	71	(71) F. JUSTA	Comp. 9965159, 87682972
		CABINE	
REF.597J	72	(72) F.CABIN	Comp. 321750750, 47405000
REF.597K	72	(72) F.CABIN CARBONO	Comp. 920018705
REF.597L	73	(73) F.CABIN	Comp. 9966191
REF.599H	74	(74) F.PULL	Comp. 700055604, 84078520
REF.597G	74	(76) F. PULL	Comp. 920018819

FILTRO 680

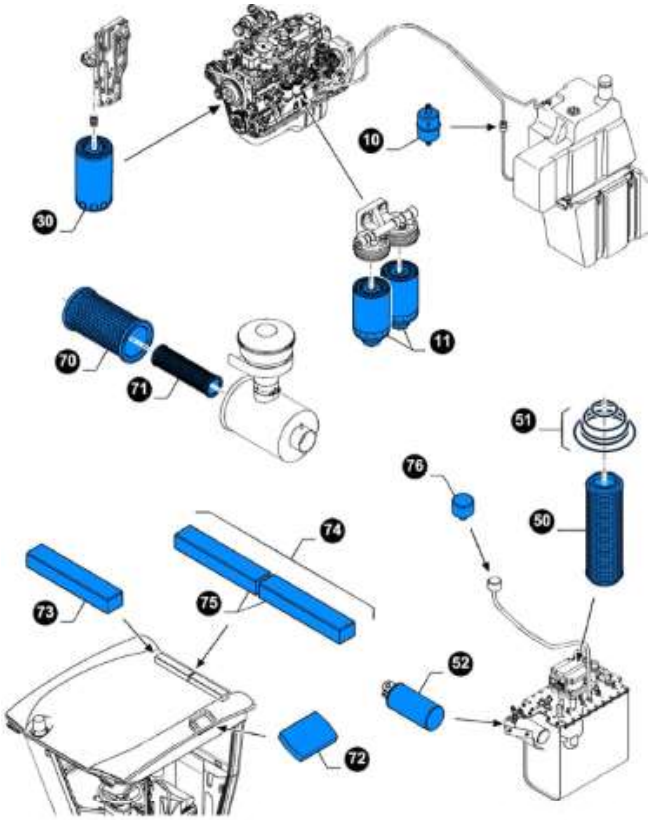

		COMBUSTÍVEL	
REF.515A	10	(10) PRÉ-FILTRO GASOIL	Comp. 87400394, D139225
REF.515K	11	(11) F.GASOIL	Comp. 1902138
		ÓLEO	
REF.516G	30	(30) F. MOTOR	Comp. 2852138, 87803260,
		HIDRÁULICO	
REF.599A	50	(50) F.HYDRAULIC	Comp. 9964918
REF.722A	51	(51) anel de segurança	Comp. 87547082
REF.599C	52	(52) F. hydraul. RETORNA	Comp. 9964728
		AR	
REF.597B	70	(70) F. JUSTA	Comp. 9965158, 87682973
REF.597D	71	(71) F. JUSTA	Comp. 9965159, 87682972
		CABINE	
REF.597T	72	(72) F. CABINE	Comp. 84607214
REF.597M	72	(73) F. JUSTA	Comp. 944028550
REF.597E	73	(74) KIT F. CABINE 2UD	Comp. 713008035
REF.597F	74	(75) F. CARBONO CABINE	Comp. 944032451
REF.597G	74	(76) F. PULL	Comp. 920018819

Todas as marcas comerciais pertencem aos seus respectivos proprietários e seu uso é apenas para fins informativos.

Verifique a Ref. Antes.

WWW.EDUARDOREPUESTOSAGRICOLAS.COM

IVA não incluso

Transporte gratuito da UE para pedidos de

FILTRO 7090

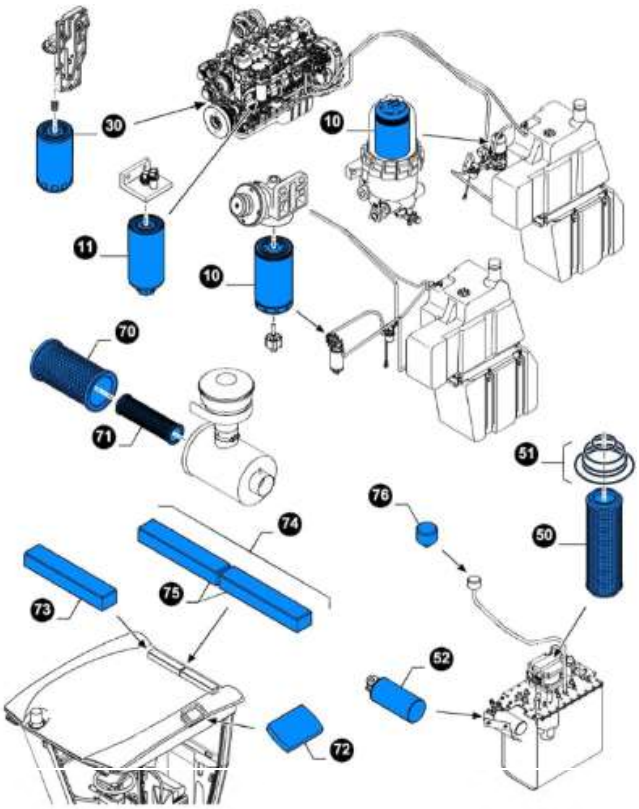

COMBUSTÍVEL

REF.515L	10	(10) PRÉ-FILTRO GASOIL	Comp. 87519301, 87592171
REF.515M	10	(10) PRÉ-FILTRO GASOIL	Comp. 84283691
REF.515N	11	(11) F. GASOIL	Comp. 2852693
REF.515P	11	(11) F. GASOIL	Comp. 2830348
REF.515Q	11	F. GASOIL	Comp. 84209753, 84526251

ÓLEO

REF.516J	30	(30) F. MOTOR	Comp. 2852526
REF.516B	30	(30) F.ENGINE	Comp. 4897898, 84228488

HIDRÁULICO

REF.599A	50	(50) F.HYDRAULIC	Comp. 9964918
REF.722A	51	(51) anel de segurança	Comp. 87547082
REF.599C	52	(52) F. hydraul. RETORNA	Comp. 9964728

AR

REF.597B	70	(70) F. JUSTA	Comp. 9965158, 87682973
REF.597D	71	(71) F. JUSTA	Comp. 9965159, 87682972

CABINE

REF.597T	72	(72) F. CABINE	Comp. 84607214
REF.597M	73	(73) F. JUSTA	Comp. 944028550
REF.597E	74	(74) KIT F. CABINE 2UD	Comp. 713008035
REF.597F	75	(75) F. CARBONO CABINE	Comp. 944032451
REF.597G	76	(76) F. PULL	Comp. 920018819

FILTRO 7090 OLIVE

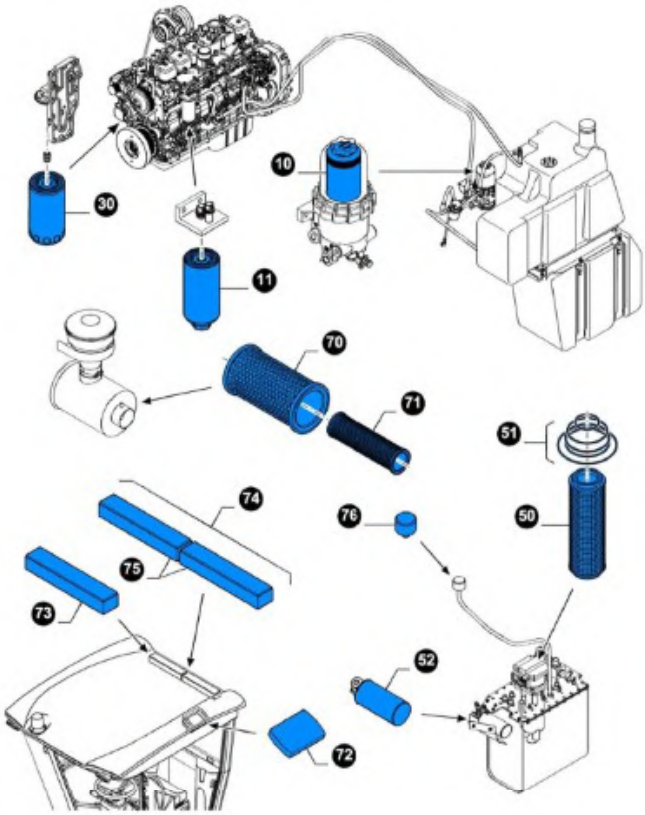

COMBUSTÍVEL

REF.515M	10	(10) PRÉ-FILTRO GASOIL	Comp. 84283691
REF.515Q	11	F. GASOIL	Comp. 84209753, 84526251

ÓLEO

REF.516B	30	(30) F.ENGINE	Comp. 4897898, 84228488

HIDRÁULICO

REF.599A	50	(50) F.HYDRAULIC	Comp. 9964918
REF.722A	51	(51) anel de segurança	Comp. 87547082
REF.599C	52	(52) F. hydraul. RETORNA	Comp. 9964728

AR

REF.597B	70	(70) F. JUSTA	Comp. 9965158, 87682973
REF.597D	71	(71) F. JUSTA	Comp. 9965159, 87682972
REF.597T	74	(72) F. CABINE	Comp. 84607214
REF.597M	73	(73) F. JUSTA	Comp. 944028550
REF.597E	74	(74) KIT F. CABINE 2UD	Comp. 713008035
REF.597F	75	(75) F. CARBONO CABINE	Comp. 944032451
REF.597G	76	(76) F. PULL	Comp. 920018819

Todas as marcas comerciais pertencem aos seus respectivos proprietários e seu uso é apenas para fins informativos.

GREGOIRE COMPATIBLE

EDUARDO

REF.106D

MOLD MEDIO . ARC TIE-ROD 1,125 milímetros. D25 AMARELO

Comp. 265675

G MM, G 60, G 60 I, G 70, G 70 A, G 71, G80, G 85, G 86, G 90, G 103, G 104, G 105, G 106, G 107, G 110, G 114, G 115, G 116, G 117, G 135 V, G2.220, G2.230, G4.220, G6.200, G6.210, G7.210, G7.220,

★ REF.106E

NOVO !

MOLD MEDIO . ARC TIE-ROD 1,125 milímetros. D25 PRETO

Comp. 265785

G MM, G 60, G 60 I, G 70, G 70 A, G 71, G80, G 85, G 86, G 90, G 103, G 104, G 105, G 106, G 107, G 110, G 114, G 115, G 116, G 117, G 135 V, G2.220, G2.230, G4.220, G6.200, G6.210, G7.210, G7.220,

★ REF.106F

NOVO !

MOLD BAIXO . ARC TIE-ROD 1.169 milímetros. D25 AMARELO

Comp. 265739

G 3

★ REF.106G

NOVO !

MOLD BAIXO . ARC TIE-ROD 1.169 milímetros. D25 PRETO

Comp. 265796

G 3

REF.107D

MOLD LONGO ARC tirante 1330MM D25 AMARELO.

Comp. 265617

G MM, G 60, G 60 I, G 70, G 70 A, G 71, G80, G 85, G 86, G 90, G 103, G 104, G 105, G 106, G 107, G 110, G 114, G 115, G 116, G 117, G 135 V, G2.220, G2.230, G4.220, G6.200, G6.210, G7.210, G7.220,

★ REF.107E

NOVO !

MOLD LONGO ARC tirante 1330MM D25 PRETO

Comp. 265789

G MM, G 60, G 60 I, G 70, G 70 A, G 71, G80, G 85, G 86, G 90, G 103, G 104, G 105, G 106, G 107, G 110, G 114, G 115, G 116, G 117, G 135 V, G2.220, G2.230, G4.220, G6.200, G6.210, G7.210, G7.220,

REF.108F

MOLD BAIXO AMARELO. ARC tirante D25 (859x871)

Comp. 265682

G 50, G 50 A, G 55 H, G 55 I, G 55 VH, G 56 I, G.Prima, G1.190, G1.200,

REF.108E

AMARELO formada ARC tirante D25

Comp. 265020

G 50, G 50 A, G 55 H, G 55 I, G 55 VH, G 56 I, G.Prima, G1.190, G1.200,

REF.113D

REDONDA AGITA rolo de comprimento D28 1.325 mm

Comp. 265510

G 103, G 104, G 105, G 106, G 107, G 108, G 10X, G 114, G 115, G 117, G 120 SD, G 120SW, G 121, G 122, G 125, G 130, G 132, G 133V, G 135 V, G 13X, G 140SW, G 152, G 167, G 170, G 175V, G 6.200, G 6.210, G 60, G 7.220, G 7.240, G 70, G 71, G 8.260, G 8.270, G 84, G 86, G 9.320, G 91

★ REF.113G

NOVO !

SHAKER GL AMARELO

Comp. 265843

GL 8, G X 8

★ REF.113L

NOVO !

SHAKER GL PRETO

Comp. 265778

GL 7.4, G M 7.4

REF.104A

AZEITONAS INFERIOR AGITADOR 935 milímetros Ø28

Comp. 265574

9090X, 9090X GE, 9090X GE T3, 9090X GE T4, 9090X GE T5, 9090X H, 9090X H H, 9090X H T4, 9090X O, 9090X O GE, 9090X O GE T3, 9090X O GE T4, 9090X O GE T5, 9090X O H T4, 9090X O T3, 9090X O T4, 9090X O T5, 9090X OP, 9090X OP GE, 9090X T3, 9090X T4, 9090X T5, SB65, VX680, VX7090

★ REF.118C

NOVO !

ROD Hoder HALF GRAMPO D35 KIT 2 parafusos, 2 porcas e 2 arruelas Ø25

Comp. 175011, 175012

G 65, G 66, G 120 SW, G 140 SW, G 167, G 240, G9.320, G9.330, G9.330 Olive, G10.330,

★ REF.118D

NOVO !

ROD Hoder HALF GRAMPO D40 KIT 2 parafusos, 2 porcas e 2 arruelas Ø28

Comp. 175017

G 65, G 66, G 120 SW, G 140 SW, G 167, G 240, G9.320, G9.330, G9.330 Olive, G10.330,

REF.119A

ROD TITULAR DE APOIO D25 de HR

Comp. 120462

G MM, G 60, G 60 I, G 70, G 70 A, G 71, G80, G 85, G 86, G 90, G 103, G 104, G 105, G 106, G 107, G 110, G 114, G 115, G 116, G 117, G 135 V, G2.220, G2.230, G4.220, G6.200, G6.210, G7.210, G7.220, G 120, G 121, G 122, G 125, G 130, G 132, G 132 BC, G 151, G 152, G 152 BC, G 152 I, G 160, G 170, G7.240, G8.260, G8.270, G 50, G 50 A, G 55 H, G 55 I, G 55 VH, G 56 I, G.Prima, G1.190, G1.200,

REF.120A

ROD TITULAR DE APOIO D25 L.H.

Comp. 120463

G MM, G 60, G 60 I, G 70, G 70 A, G 71, G80, G 85, G 86, G 90, G 103, G 104, G 105, G 106, G 107, G 110, G 114, G 115, G 116, G 117, G 135 V, G2.220, G2.230, G4.220, G6.200, G6.210, G7.210, G7.220, G 120, G 121, G 122, G 125, G 130, G 132, G 132 BC, G 151, G 152, G 152 BC, G 152 I, G 160, G 170, G7.240, G8.260, G8.270, G 50, G 50 A, G 55 H, G 55 I, G 55 VH, G 56 I, G.Prima, G1.190, G1.200,

REF.123A

ROD TITULAR DE APOIO D28 de HR

Comp. 121461

G 65, G 66, G 120 SW, G 140 SW, G 167, G 240, G9.320, G9.330, G9.330 Olive, G10.330,

REF.124A

ROD TITULAR DE APOIO D28 L.H.

Comp. 121462

G 65, G 66, G 120 SW, G 140 SW, G 167, G 240, G9.320, G9.330, G9.330 Olive, G10.330,

REF.232B

BAR FIBRA COM INOX tubo. BENT, olival (comprimento de 100 cm)

Comp. -

REF.233B

FIBRA BAR COM TUBO INOX.WITHOUT BEND, Olive Grove (comprimento 100 cm)

Comp. -

Todas as marcas comerciais pertencem aos seus respectivos proprietários e seu uso é apenas para fins informativos.

Verifique a Ref. Antes.

WWW.EDUARDOREPUESTOSAGRICOLAS.COM

IVA não incluso

Transporte gratuito da UE para pedidos de 500

REF.101D

CATCHER BANDEJA HR (417x224)

Comp. 155083

G MM, G 60, G 60 I, G 70, G 70 A, G 71, G80, G 85, G 86, G 90, G 103, G 104, G 105, G 106, G 107, G 110, G 114, G 115, G 116, G 117, G 135 V, G2.220, G2.230, G4.220, G6.200, G6.210, G7.210, G7.220, G 120, G 121, G 122, G 125, G 130, G 132, G 132 BC, G 151, G 152, G 152 BC, G 152 I, G 160, G 170, G7.240, G8.260, G8.270, G 50, G 50 A, G 55 H, G 55 I, G 55 VH, G 56 I, G.Prima, G1.190, G1.200,

REF.102D

CATCHER BANDEJA L.H. (417x224)

Comp. 155084

G MM, G 60, G 60 I, G 70, G 70 A, G 71, G80, G 85, G 86, G 90, G 103, G 104, G 105, G 106, G 107, G 110, G 114, G 115, G 116, G 117, G 135 V, G2.220, G2.230, G4.220, G6.200, G6.210, G7.210, G7.220, G 120, G 121, G 122, G 125, G 130, G 132, G 132 BC, G 151, G 152, G 152 BC, G 152 I, G 160, G 170, G7.240, G8.260, G8.270, G 50, G 50 A, G 55 H, G 55 I, G 55 VH, G 56 I, G.Prima, G1.190, G1.200,

REF.103A

RECOLHA DO TABULEIRO enrijecedor 15 ° - 10 ESPESSURA

Comp. 155018

G MM, G 60, G 60 I, G 70, G 70 A, G 71, G80, G 85, G 86, G 90, G 103, G 104, G 105, G 106, G 107, G 110, G 114, G 115, G 116, G 117, G 135 V, G2.220, G2.230, G4.220, G6.200, G6.210, G7.210, G7.220, G 120, G 121, G 122, G 125, G 130, G 132, G 132 BC, G 151, G 152, G 152 BC, G 152 I, G 160, G 170, G7.240, G8.260, G8.270, G 50, G 50 A, G 55 H, G 55 I, G 55 VH, G 56 I, G.Prima, G1.190, G1.200,

REF.155A

CATCHER TRAY TIGHENING PLACA

Comp. 345533

0 G MM, G 60, G 60 I, G 70, G 70 A, G 71, G80, G 85, G 86, G 90, G 103, G 104, G 105, G 106, G 107, G 110, G 114, G 115, G 116, G 117, G 135 V, G2.220, G2.230, G4.220, G6.200, G6.210, G7.210, G7.220, G 120, G 121, G 122, G 125, G 130, G 132, G 132 BC, G 151, G 152, G 152 BC, G 152 I, G 160, G 170, G7.240, G8.260, G8.270, G 50, G 50 A, G 55 H, G 55 I, G 55 VH, G 56 I, G.Prima, G1.190, G1.200,

★ REF.105A

NOVO !

CATCHER BANDEJA HR

Comp. 155359

G M 74, G L 8, G L 74, GX 8

★ REF.105B

NOVO !

CATCHER BANDEJA L.H.

Comp. 155360

G M 74, G L 8, G L 74, GX 8

★ REF.105D

NOVO !

RECOLHA DO TABULEIRO enrijecedor

Comp. 155018

REF.121A

Parafuso de fixação KW CATCHER M8X25 MM

Comp. 60031

G 65, G 66, G 120 SW, G 140 SW, G 167, G 240, G9.320, G9.330, G9.330 Olive, G10.330,

REF.111B

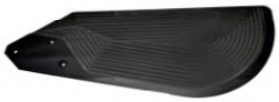

KW CATCHER TRAY L.H. (580x263)

Comp. 155128

G 103, G 104, G 105, G 106, G 107, G 108, G 10X, G 114, G 115, G 117, G 120 SD, G 120SW, G 121, G 122, G 125, G 130, G 132, G 133V, G 135 V, G 13X, G 140SW, G 152, G 167, G 170, G 175V, G 6.200, G 6.210, G 60, G 7.220, G 7.240, G 70, G 71, G 8.260, G 8.270, G 84, G 86, G 9.320, G 90

REF.112B

KW CATCHER BANDEJA de HR (580x263)

Comp. 155127

G 103, G 104, G 105, G 106, G 107, G 108, G 10X, G 114, G 115, G 117, G 120 SD, G 120SW, G 121, G 122, G 125, G 130, G 132, G 133V, G 135 V, G 13X, G 140SW, G 152, G 167, G 170, G 175V, G 6.200, G 6.210, G 60, G 7.220, G 7.240, G 70, G 71, G 8.260, G 8.270, G 84, G 86, G 9.320, G 90

REF.127A*

CATCHER TABULEIRO DE BORRACHA JOINT 16X32X76 mm

Comp. 385615

G 65, G 66, G 120 SW, G 140 SW, G 167, G 240, G9.320, G9.330, G9.330 Olive, G10.330,

REF.128A

FLEXÍVEL CATCHER TRAY SUP. RH

Comp. 203073

G 65, G 66, G 120 SW, G 140 SW, G 167, G 240, G9.320, G9.330, G9.330 Olive, G10.330,

REF.128B

FLEXÍVEL CATCHER TRAY SUP. LH

Comp. 203074

G 65, G 66, G 120 SW, G 140 SW, G 167, G 240, G9.320, G9.330, G9.330 Olive, G10.330,

REF.128E

M16

PARAFUSO M16 X110 ZN 8,8 cabeça estreita WHASERS M16 ZN NUTS COM

Comp. (65069+388025+65016)

G 65, G 66, G 120 SW, G 140 SW, G 167, G 240, G9.320, G9.330, G9.330 Olive, G10.330,

REF.197A

M8

PARAFUSO E PORCA M8 X40 (ROD Titular, agitadores)

Comp. 060023, 060003

G MM, G 60, G 60 I, G 70, G 70 A, G 71, G80, G 85, G 86, G 90, G 103, G 104, G 105, G 106, G 107, G 110, G 114, G 115, G 116, G 117, G 135 V, G2.220, G2.230, G4.220, G6.200, G6.210, G7.210, G7.220, G 120, G 121, G 122, G 125, G 130, G 132, G 132 BC, G 151, G 152, G 152 BC, G 152 I, G 160, G 170, G7.240, G8.260, G8.270, G 50, G 50 A, G 55 H, G 55 I, G 55 VH, G 56 I, G.Prima, G1.190, G1.200,

REF.197B

M10

Kit 2 PARAFUSOS M10X30, 2 PORCAS E ANILHAS 2 (suporte da haste de coluna)

Comp. 065393, 065078,

G MM, G 60, G 60 I, G 70, G 70 A, G 71, G80, G 85, G 86, G 90, G 103, G 104, G 105, G 106, G 107, G 110, G 114, G 115, G 116, G 117, G 135 V, G2.220, G2.230, G4.220, G6.200, G6.210, G7.210, G7.220, G 120, G 121, G 122, G 125, G 130, G 132, G 132 BC, G 151, G 152, G 152 BC, G 152 I, G 160, G 170, G7.240, G8.260, G8.270, G 50, G 50 A, G 55 H, G 55 I, G 55 VH, G 56 I, G.Prima, G1.190, G1.200,

REF.197C

M10

Kit 2 PARAFUSOS 8,8 M10x65, 2 porcas especiais, 2 (ROD WHASERS SUPORTE PARA D35 coluna). Al, Ø25

Comp. -

G MM, G 60, G 60 I, G 70, G 70 A, G 71, G80, G 85, G 86, G 90, G 103, G 104, G 105, G 106, G 107, G 110, G 114, G 115, G 116, G 117, G 135 V, G2.220, G2.230, G4.220, G6.200, G6.210, G7.210, G7.220, G 120, G 121, G 122, G 125, G 130, G 132, G 132 BC, G 151, G 152, G 152 BC, G 152 I, G 160, G 170, G7.240, G8.260, G8.270, G 50, G 50 A, G 55 H, G 55 I, G 55 VH, G 56 I, G.Prima, G1.190, G1.200,

REF.197D

M12

KIT: 2 parafusos 8,8M12x90, 2 porcas especiais, 2 WHASERS (TITULAR D40 ROD para a coluna). Al, Ø28

Comp. -

G MM, G 60, G 60 I, G 70, G 70 A, G 71, G80, G 85, G 86, G 90, G 103, G 104, G 105, G 106, G 107, G 110, G 114, G 115, G 116, G 117, G 135 V, G2.220, G2.230, G4.220, G6.200, G6.210, G7.210, G7.220, G 120, G 121, G 122, G 125, G 130, G 132, G 132 BC, G 151, G 152, G 152 BC, G 152 I, G 160, G 170, G7.240, G8.260,

REF.197E

M10

Kit 2 PARAFUSOS M10x45, 2 porcas ET (suporte da haste de coluna) 2 anilhas

Comp. 065276, 065078,

G 65, G 66, G 120 SW, G 140 SW, G 167, G 240, G9.320, G9.330, G9.330 Olive, G10.330,

REF.197F

M8

KIT DE PARAFUSOS 2 M8x55 et M8x45 2, PORCAS E ANILHAS 2

Comp. 065300 (8x45), 066022

G MM, G 60, G 60 I, G 70, G 70 A, G 71, G80, G 85, G 86, G 90, G 103, G 104, G 105, G 106, G 107, G 110, G 114, G 115, G 116, G 117, G 135 V, G2.220, G2.230, G4.220, G6.200, G6.210, G7.210, G7.220, G 120, G 121, G 122, G 125, G 130, G 132, G 132 BC, G 151, G 152, G 152 BC, G 152 I, G 160, G 170, G7.240, G8.260, G8.270, G 50, G 50 A, G 55 H, G 55 I, G 55 VH, G 56 I, G.Prima, G1.190, G1.200,

GREGOIRE COMPATIBLE

EDUARDO

REF.110A

CORREIA 11 metros sem AGRAFE INOX (320 milímetros) SEM REMESSA

Comp. -

MINI 3, GMM, G 55 M, G 55 H, G 60, G 60 KW, G 70, G 90, G 104, G 106, G 107, G 108, G 110, G 114, G 115, G 117, G 120, G 122, G 125, G 132 2B, G 132 BC, G 152 2B, G Prima, G1.180, G1.190, G1.200, G2.220, G2.230, G3.220, G3.230, G3.250, G6.200, G6.210, G7.210, G7.220, G7.240, G8.260

REF.110B

CORREIA DO METER (320 milímetros) SEM REMESSA

Comp. -

GM 420, PMS, 301 BC, MINI 3, GMM, G 55 M, G 55 H, G 60, G 60 KW, G 65, G 66, G 70, G 90, G 104, G 106, G 107, G 108, G 110, G 114, G 115, G 117, G 120, G 120 K, G 120 KW, G 120 SW, G 122, G 125, G 130, G 132 2B, G 132 BC, G 133, G 134, G 140 SW, G 152 2B, G 152 BC, G 152 I, G 160, G 167, G 170, G 240 , G Prima, G1.180, G1.190, G1.200, G2.220, G2.230, G3.220, G3.230, G3.250, G6.200, G6.210, G7.210, G7.220, G7.240, G8.260

REF.340B

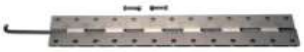

Fixador assy. AR INOXIDÁVEL L320 com parafusos

Comp. 24005

PMME, PMM 85, PMM 86, G 50 E, G 50 A, G 50 H, G 50 M, G 70 AL, G 70 E, G 71, G 71 E, G 80, G 85, G 86, G 103, G 105, G 135, G4.221

★ REF.340C

NOVO !

Fixador assy. AR INOXIDÁVEL L320 com unhas de Cu

Comp. 24005

PMME, PMM 85, PMM 86, G 50 E, G 50 A, G 50 H, G 50 M, G 70 AL, G 70 E, G 71, G 71 E, G 80, G 85, G 86, G 103, G 105, G 135, G4.222

REF.110C*

CORREIA 11 metros sem AGRAFE INOX (240 milímetros) SEM REMESSA

Comp. -

PMME, PMM 85, PMM 86, G 50 E, G 50 A, G 50 H, G 50 M, G 70 AL, G 70 E, G 71, G 71 E, G 80, G 85, G 86, G 103, G 105, G 135, G4.220

REF.110D

CORREIA DO METER (240 milímetros) SEM REMESSA

Comp. -

PMME, PMM 85, PMM 86, G 50 E, G 50 A, G 50 H, G 50 M, G 70 AL, G 70 E, G 71, G 71 E, G 80, G 85, G 86, G 103, G 105, G 135, G4.220

REF.340A

Fixador assy. AR INOXIDÁVEL L240 com parafusos

Comp. 24018

PMME, PMM 85, PMM 86, G 50 E, G 50 A, G 50 H, G 50 M, G 70 AL, G 70 E, G 71, G 71 E, G 80, G 85, G 86, G 103, G 105, G 135, G4.220

★ REF.340D

NOVO !

Fixador assy. AR INOXIDÁVEL L240 com unhas de Cu

Comp. 24018

PMME, PMM 85, PMM 86, G 50 E, G 50 A, G 50 H, G 50 M, G 70 AL, G 70 E, G 71, G 71 E, G 80, G 85, G 86, G 103, G 105, G 135, G4.223

REF.110E

CORREIA DO METER (320 milímetros) (COM 2 LATERAIS PROFILS)AZEITONAS. SEM REMESSA

Comp. -

G 66, G 67, G 120 SW, G 140 SW, G 170,

REF.145A

Fixador PIN - STAINLESS D5 L240

Comp. 24019

PMME, PMM 85, PMM 86, G 50 E, G 50 A, G 50 H, G 50 M, G 70 AL, G 70 E, G 71, G 71 E, G 80, G 85, G 86, G 103, G 105, G 135, G4.220

REF.145B

Fixador PIN - STAINLESS D5 L320

Comp. 24004

GM 420, PMS, 301 BC, MINI 3, GMM, G 55 M, G 55 H, G 60, G 60 KW, G 65, G 66, G 70, G 90, G 104, G 106, G 107, G 108, G 110, G 114, G 115, G 117, G 120, G 120 K, G 120 KW, G 120 SW, G 122, G 125, G 130, G 132 2B, G 132 BC, G 133, G 134, G 140 SW, G 152 2B, G 152 BC, G 152 I, G 160, G 167, G 170, G 240 , G Prima, G1.180, G1.190, G1.200, G2.220, G2.230, G3.220, G3.230, G3.250, G6.200, G6.210, G7.210, G7.220, G7.240, G8.260

REF.351D

Unhas cobre com TIP (3,9x24 mm)

Comp. -

PMME, PMM, GMM, G 50, G 50 A, G 50 E, G 55 H, G 55 I, G 55 VH, G 56 I, G 60, G 60 I, G 60 KW, G 60 WH, G 65, G 66, G 70, G 70 A, G 71, G 80, G 84, G 85, G 86, G 90, G 103, G 104, G 105, G 106, G 107, G 108, G 110, G 114, G 115, G 116, G 117, G 120, G 120 SW, G 121, G 122, G 125, G 130, G 132, G 132 BC, G 135V, G 140 SW, G 151, G 152, G 152 BC, G 152 I, G 160, G 167, G 170, G 175 V, G 240, G Prima, G1.190, G1.200, G2.220, G2.230, G3.220, G3.230, G3.250, G4.200, G4.210, G4.220, G5.310, G5.320, G6.200, G6.210, G7.200, G7.210, G7.220, G7.240, G8.260, G8.270, G9.320, G9.330, G10.330, G10.380, GL7.4, GL8, GX8, GM7.4

REF.154C

UPPER CLEANER CORREIA TRANSPORTADORA 910x360mm + fixador

Comp. 285193

G 103, G 104, G 105, G 106, G 107, G 108, G 10X, G 114, G 115, G 117, G 120 SD, G 120SW, G 121, G 122, G 125, G 130, G 132, G 133V, G 135 V, G 13X, G 140SW, G 152, G 167, G 170, G 175V, G 6.200, G 6.210, G 60, G 7.220, G 7.240, G 70, G 71, G 8.260, G 8.270, G 84, G 86, G 9.320, G 90

REF.339R

inox GRAMPO RS125 (1,2m)

Comp. -

REF.339S

inox GRAMPO RS125 (1m) unhas

Comp. -

REF.351C

Unhas cobre com TIP (2,1x17 mm)

Comp. -

PMME, PMM, GMM, G 50, G 50 A, G 50 E, G 55 H, G 55 I, G 55 VH, G 56 I, G 60, G 60 I, G 60 KW, G 60 WH, G 65, G 66, G 70, G 70 A, G 71, G 80, G 84, G 85, G 86, G 90, G 103, G 104, G 105, G 106, G 107, G 108, G 110, G 114, G 115, G 116, G 117, G 120, G 120 SW, G 121, G 122, G 125, G 130, G 132, G 132 BC, G 135V, G 140 SW, G 151, G 152, G 152 BC, G 152 I, G 160, G 167, G 170, G 175 V, G 240, G Prima, G1.190, G1.200, G2.220, G2.230, G3.220, G3.230, G3.250, G4.200, G4.210, G4.220, G5.310, G5.320, G6.200, G6.210, G7.200, G7.210, G7.220, G7.240, G8.260, G8.270, G9.320, G9.330, G10.330, G10.380, GL7.4, GL8, GX8, GM7.4

REF.154G

CORREIA por m2, 2 camadas, Liso / suave. ESPESSURA 3.2 MM. (1m x

Comp. -

PMME, PMM, GMM, G 50, G 50 A, G 50 E, G 55 H, G 55 I, G 55 VH, G 56 I, G 60, G 60 I, G 60 KW, G 60 WH, G 65, G 66, G 70, G 70 A, G 71, G 80, G 84, G 85, G 86, G 90, G 103, G 104, G 105, G 106, G 107, G 108, G 110, G 114, G 115, G 116, G 117, G 120, G 120 SW, G 121, G 122, G 125, G 130, G 132, G 132 BC, G 135V, G 140 SW, G 151, G 152, G 152 BC, G 152 I, G 160, G 167, G 170, G 175 V, G 240, G Prima, G1.190, G1.200, G2.220, G2.230, G3.220, G3.230, G3.250, G4.200, G4.210, G4.220, G5.310, G5.320, G6.200, G6.210, G7.200, G7.210, G7.220, G7.240, G8.260, G8.270, G9.320, G9.330, G10.330, G10.380, GL7.4, GL8, GX8, GM7.4

REF.154H

CORREIA por m2, 3 camadas, Liso / suave. ESPESSURA 4,3 MM. (1m x

Comp. -

PMME, PMM, GMM, G 50, G 50 A, G 50 E, G 55 H, G 55 I, G 55 VH, G 56 I, G 60, G 60 I, G 60 KW, G 60 WH, G 65, G 66, G 70, G 70 A, G 71, G 80, G 84, G 85, G 86, G 90, G 103, G 104, G 105, G 106, G 107, G 108, G 110, G 114, G 115, G 116, G 117, G 120, G 120 SW, G 121, G 122, G 125, G 130, G 132, G 132 BC, G 135V, G 140 SW, G 151, G 152, G 152 BC, G 152 I, G 160, G 167, G 170, G 175 V, G 240, G Prima, G1.190, G1.200, G2.220, G2.230, G3.220, G3.230, G3.250, G4.200, G4.210, G4.220, G5.310,

REF.151A

CORREIA TRANSPORTADORA APERTO TOOL

Comp. 203014

PMME, PMM, GMM, G 50, G 50 A, G 50 E, G 55 H, G 55 I, G 55 VH, G 56 I, G 60, G 60 I, G 60 KW, G 60 WH, G **65, G 66, G 70, G 70 A, G 71, G 80, G 84, G 85, G 86, G 90, G 103, G 104, G 105, G 106, G 107, G 108, G 110, G** 114, G 115, G 116, G 117, G 120, G 120 SW, G 121, G 122, G 125, G 130, G 132, G 132 BC, G 135V, G 140 SW, G 151, G 152, G 152 BC, G 152 I, G 160, G 167, G 170, G 175 V, G 240, G Prima, G1.190, G1.200, G2.220, G2.230, G3.220, G3.230, G3.250, G4.200, G4.210, G4.220, G5.310, G5.320, G6.200, G6.210, G7.200, G7.210, G7.220, G7.240, G8.260, G8.270, G9.320, G9.330, G10.330, G10.380, GL7.4, GL8, GX8, GM7.4

REF.187A

PLACA DE SUPORTE DO AGITADOR

Comp. 385182

Todas as marcas comerciais pertencem aos seus respectivos proprietários e seu uso é apenas para fins informativos.

Verifique a Ref. Antes.

WWW.EDUARDOREPUESTOSAGRICOLAS.COM

IVA não incluso

Transporte gratuito da UE para pedidos de 500

REF.180A

Largura da Caçamba 240 MM CORREIA DE OLIVEIRA G140, G120, G9

Comp. 265287

G 65, G 66, G 67, G 120 SW, G 133, G 134, G 140 SW, G 170, G 240, G.8270, G9.320, G9.330 V

REF.180B

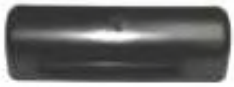

BALDE DE 240 MM CORREIA DE 320 MM

Comp. 265279

GM420, PMS, 301 BC, MINI 3, GMM, G 55 M, G 55 H, G 60, G 60 KW, G 70, G 90, G 104, G 106, G 107, G 108, G 110, G 114, G 115, G 117, G 120, G 120 K, G 120 KW, G 122, G 125, G 130, G 132 2B, G 132 BC, G 152 2B, G 152 BC, G 152 I, G 160, G 167, G 170, GPrima, G1.180, G1.190, G1.200, G2.220, G2.230, G3.220,

REF.180D

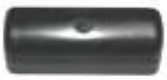

BALDE DE 160 MM CORREIA DE 240 MM

Comp. 265278

PMME, PMM85, PMM86, G 50 E, G 50 A, G 50 H, G 50 M, G 70 AL, G 70 E, G 71, G 71 E, G 80, G 85, G 86, G 103, G 105, G 135, G4.220

REF.121B

PARAFUSO + PORCA + WASHER M8X30

Comp. -

PMME, PMM, GMM, G 50, G 50 A, G 50 E, G 55 H, G 55 I, G 55 VH, G 56 I, G 60, G 60 I, G 60 KW, G 60 WH, G 65, G 66, G 70, G 70 A, G 71, G 80, G 84, G 85, G 86, G 90, G 103, G 104, G 105, G 106, G 107, G 108, G 110, G 114, G 115, G 116, G 117, G 120, G 120 SW, G 121, G 122, G 125, G 130, G 132, G 132 BC, G 135V, G 140 SW, G 151, G 152, G 152 BC, G 152 I, G 160, G 167, G 170, G 175 V, G 240, G Prima, G1.190, G1.200, G2.220, G2.230, G3.220, G3.230, G3.250, G4.200, G4.210, G4.220, G5.310, G5.320, G6.200, G6.210, G7.200, G7.210, G7.220, G7.240, G8.260, G8.270, G9.320, G9.330, G10.330, G10.380, GL7.4, GL8, GX8, GM7.4

REF.185A

BALDE placa de fixação

Comp. 345594

GM420, PMS, 301 BC, MINI 3, GMM, G 55 M, G 55 H, G 60, G 60 KW, G 70, G 90, G 104, G 106, G 107, G 108, G 110, G 114, G 115, G 117, G 120, G 120 K, G 120 KW, G 122, G 125, G 130, G 132 2B, G 132 BC, G 152 2B, G 152 BC, G 152 I, G 160, G 167, G 170, GPrima, G1.180, G1.190, G1.200, G2.220, G2.230, G3.220, G3.230, G3.250, G6.200, G6.210, G7.210, G7.220, G7.240, G8.260, G8.270,

REF.185B

BALDE placa de fixação

Comp. 346272

G 65, G 66, G 67, G 120 SW, G 133, G 134, G 140 SW, G 170, G 240, G.8270, G9.320, G9.330 V, PMME, PMM85, PMM86, G 50 E, G 50 A, G 50 H, G 50 M, G 70 AL, G 70 E, G 71, G 71 E, G 80, G 85, G 86, G 103, G 105, G 135, G4.220

REF.153C

INFERIOR DIREITO FRENTE FLAP, 3-camadas 4,2MM AZUL

Comp. 285005

PMME, PMM, GMM, G 50, G 50 A, G 50 E, G 55 H, G 55 I, G 55 VH, G 56 I, G 60, G 60 I, G 60 KW, G 60 WH, G 65, G 66, G 70, G 70 A, G 71, G 80, G 84, G 85, G 86, G 90, G 103, G 104, G 105, G 106, G 107, G 108, G 110, G 114, G 115, G 116, G 117, G 120, G 120 SW, G 121, G 122, G 125, G 130, G 132, G 132 BC, G 135V, G 140 SW, G 151, G 152, G 152 BC, G 152 I, G 160, G 167, G 170, G 175 V, G 240, G Prima, G1.190, G1.200, G2.220, G2.230, G3.220, G3.230, G3.250, G4.200, G4.210, G4.220, G5.310, G5.320, G6.200, G6.210, G7.200, G7.210, G7.220, G7.240, G8.260, G8.270, G9.320, G9.330, G10.330, G10.380, GL7.4, GL8, GX8, GM7.4

REF.153D

ESQUERDA frontal inferior do FLAP, 3-camadas 4,2MM AZUL

Comp. 285006

PMME, PMM, GMM, G 50, G 50 A, G 50 E, G 55 H, G 55 I, G 55 VH, G 56 I, G 60, G 60 I, G 60 KW, G 60 WH, G 65, G 66, G 70, G 70 A, G 71, G 80, G 84, G 85, G 86, G 90, G 103, G 104, G 105, G 106, G 107, G 108, G 110, G 114, G 115, G 116, G 117, G 120, G 120 SW, G 121, G 122, G 125, G 130, G 132, G 132 BC, G 135V, G 140 SW, G 151, G 152, G 152 BC, G 152 I, G 160, G 167, G 170, G 175 V, G 240, G Prima, G1.190, G1.200, G2.220, G2.230, G3.220, G3.230, G3.250, G4.200, G4.210, G4.220, G5.310, G5.320, G6.200, G6.210, G7.200, G7.210, G7.220, G7.240, G8.260, G8.270, G9.320, G9.330, G10.330, G10.380, GL7.4, GL8, GX8, GM7.4

REF.153E

INFERIOR DIREITO FRENTE FLAP, 3-camadas 4,2MM VERDES

Comp. 285005

PMME, PMM, GMM, G 50, G 50 A, G 50 E, G 55 H, G 55 I, G 55 VH, G 56 I, G 60, G 60 I, G 60 KW, G 60 WH, G 65, G 66, G 70, G 70 A, G 71, G 80, G 84, G 85, G 86, G 90, G 103, G 104, G 105, G 106, G 107, G 108, G 110, G 114, G 115, G 116, G 117, G 120, G 120 SW, G 121, G 122, G 125, G 130, G 132, G 132 BC, G 135V, G 140 SW, G 151, G 152, G 152 BC, G 152 I, G 160, G 167, G 170, G 175 V, G 240, G Prima, G1.190, G1.200, G2.220, G2.230, G3.220, G3.230, G3.250, G4.200, G4.210, G4.220, G5.310, G5.320, G6.200, G6.210, G7.200, G7.210, G7.220, G7.240, G8.260, G8.270, G9.320, G9.330, G10.330, G10.380, GL7.4, GL8, GX8, GM7.4

REF.153F

ESQUERDA frontal inferior do FLAP, 3-camadas 4,2MM VERDES

Comp. 285006

PMME, PMM, GMM, G 50, G 50 A, G 50 E, G 55 H, G 55 I, G 55 VH, G 56 I, G 60, G 60 I, G 60 KW, G 60 WH, G 65, G 66, G 70, G 70 A, G 71, G 80, G 84, G 85, G 86, G 90, G 103, G 104, G 105, G 106, G 107, G 108, G 110, G 114, G 115, G 116, G 117, G 120, G 120 SW, G 121, G 122, G 125, G 130, G 132, G 132 BC, G 135V, G 140 SW, G 151, G 152, G 152 BC, G 152 I, G 160, G 167, G 170, G 175 V, G 240, G Prima, G1.190, G1.200, G2.220, G2.230, G3.220, G3.230, G3.250, G4.200, G4.210, G4.220, G5.310, G5.320, G6.200, G6.210, G7.200, G7.210, G7.220, G7.240, G8.260, G8.270, G9.320, G9.330, G10.330, G10.380, GL7.4, GL8, GX8, GM7.4

REF.153G

TRASEIRO FLAP 320X400mm

Comp. 285012

PMME, PMM, GMM, G 50, G 50 A, G 50 E, G 55 H, G 55 I, G 55 VH, G 56 I, G 60, G 60 I, G 60 KW, G 60 WH, G 65, G 66, G 70, G 70 A, G 71, G 80, G 84, G 85, G 86, G 90, G 103, G 104, G 105, G 106, G 107, G 108, G 110, G 114, G 115, G 116, G 117, G 120, G 120 SW, G 121, G 122, G 125, G 130, G 132, G 132 BC, G 135V, G 140 SW, G 151, G 152, G 152 BC, G 152 I, G 160, G 167, G 170, G 175 V, G 240, G Prima, G1.190, G1.200, G2.220, G2.230, G3.220, G3.230, G3.250, G4.200, G4.210, G4.220, G5.310, G5.320, G6.200, G6.210, G7.200, G7.210, G7.220, G7.240, G8.260, G8.270, G9.320, G9.330, G10.330, G10.380, GL7.4, GL8, GX8, GM7.4

REF.182A

CATCHER TRAY FLAP SUPORTE ADEQUADO PARA TESXGRE

Comp. 325004

G 103, G 104, G 105, G 106, G 107, G 108, G 10X, G 114, G 115, G 117, G 120 SD, G 120SW, G 121, G 122, G 125, G 130, G 132, G 133V, G 135 V, G 13X, G 140SW, G 152, G 167, G 170, G 175V, G 6.200, G 6.210, G 60, G 7.220, G 7.240, G 70, G 71, G 8.260, G 8.270, G 84, G 86, G 9.320, G 90

REF.182B

CATCHER TRAY FLAP suporte esquerdo PARA TESXGRE

Comp. 325005

G 103, G 104, G 105, G 106, G 107, G 108, G 10X, G 114, G 115, G 117, G 120 SD, G 120SW, G 121, G 122, G 125, G 130, G 132, G 133V, G 135 V, G 13X, G 140SW, G 152, G 167, G 170, G 175V, G 6.200, G 6.210, G 60, G 7.220, G 7.240, G 70, G 71, G 8.260, G 8.270, G 84, G 86, G 9.320, G 90

REF.184A

FRENTE CATCHER TRAY FLAP SUPORTE de HR

Comp. 345007

PMME, PMM, GMM, G 50, G 50 A, G 50 E, G 55 H, G 55 I, G 55 VH, G 56 I, G 60, G 60 I, G 60 KW, G 60 WH, G 65, G 66, G 70, G 70 A, G 71, G 80, G 84, G 85, G 86, G 90, G 103, G 104, G 105, G 106, G 107, G 108, G 110, G 114, G 115, G 116, G 117, G 120, G 120 SW, G 121, G 122, G 125, G 130, G 132, G 132 BC, G 135V, G 140 SW, G 151, G 152, G 152 BC, G 152 I, G 160, G 167, G 170, G 175 V, G 240, G Prima, G1.190, G1.200, G2.220, G2.230, G3.220, G3.230, G3.250, G4.200, G4.210, G4.220, G5.310, G5.320, G6.200, G6.210, G7.200, G7.210, G7.220, G7.240, G8.260, G8.270, G9.320, G9.330, G10.330, G10.380, GL7.4, GL8, GX8, GM7.4

REF.184B

FRENTE CATCHER TRAY FLAP SUPORTE L.H.

Comp. 345008

PMME, PMM, GMM, G 50, G 50 A, G 50 E, G 55 H, G 55 I, G 55 VH, G 56 I, G 60, G 60 I, G 60 KW, G 60 WH, G 65, G 66, G 70, G 70 A, G 71, G 80, G 84, G 85, G 86, G 90, G 103, G 104, G 105, G 106, G 107, G 108, G 110, G 114, G 115, G 116, G 117, G 120, G 120 SW, G 121, G 122, G 125, G 130, G 132, G 132 BC, G 135V, G 140 SW, G 151, G 152, G 152 BC, G 152 I, G 160, G 167, G 170, G 175 V, G 240, G Prima, G1.190, G1.200, G2.220, G2.230, G3.220, G3.230, G3.250, G4.200, G4.210, G4.220, G5.310, G5.320, G6.200, G6.210, G7.200, G7.210, G7.220, G7.240, G8.260, G8.270, G9.320, G9.330, G10.330, G10.380, GL7.4, GL8, GX8, GM7.4

REF.184C

PLACA frontal inferior (INOX)

Comp. 345009

PMME, PMM, GMM, G 50, G 50 A, G 50 E, G 55 H, G 55 I, G 55 VH, G 56 I, G 60, G 60 I, G 60 KW, G 60 WH, G 65, G 66, G 70, G 70 A, G 71, G 80, G 84, G 85, G 86, G 90, G 103, G 104, G 105, G 106, G 107, G 108, G 110, G 114, G 115, G 116, G 117, G 120, G 120 SW, G 121, G 122, G 125, G 130, G 132, G 132 BC, G 135V, G 140 SW, G 151, G 152, G 152 BC, G 152 I, G 160, G 167, G 170, G 175 V, G 240, G Prima, G1.190, G1.200, G2.220, G2.230, G3.220, G3.230, G3.250, G4.200, G4.210, G4.220, G5.310, G5.320, G6.200, G6.210, G7.200, G7.210, G7.220, G7.240, G8.260, G8.270, G9.320, G9.330, G10.330, G10.380, GL7.4, GL8, GX8, GM7.4

REF.134B

ACOPLAMENTO (LADO DO MOTOR) + Acoplamento (o lado do rotor)

Comp. 388602

REF.135A

COUPLING ANEL

Comp. 05043

REF.135B

RED COUPLING ANEL. NOVA VERSÃO

Comp. 05239

REF.148A

Montagem flexível 40x28xM10 suporte infinito

Comp. 025005

GREGOIRE COMPATIBLE

EDUARDO

REF.109A

PULLEY SCRAPER 70X30X8,2mm

Comp. 265005

G 50, G 50 A, G 55 H, G 55 I, G 55 VH, G 56 I, G.Prima, G1.190, G1.200,

REF.117A

TRASEIRO PULLEY 185 mm com Ø 20 mm Eixo

Comp. 120403

G 86, G 103, G 104, G 105, G 106, G 107, G 108, G 10X, G 114, G 115, G 117, G 120 SD, G 120SW, G 121, G 122, G 125, G 130, G 132, G 133V, G 135 V, G 13X, G 140SW, G 152, G 167, G 170, G 175V, G 6.200, G 6.210, G 60, G 7.220, G 7.240, G 70, G 71, G 8.260, G 8.270, G 84, G 86, G 9.320, G 90

REF.117B

FRENTE PULLEY 145 mm com Ø 20 mm Eixo

Comp. 120404

G 7.240, G 70, G 8.260, G 86, G 103, G 104, G 105, G 106, G 107, G 108, G 10X, G 114, G 115, G 117, G 120 SD, G 120SW, G 121, G 122, G 125, G 130, G 132, G 133V, G 135 V, G 13X, G 140SW, G 152, G 167, G 170,

REF.117D

PULLEY 145 mm, Ø 30 milímetros

Comp. 120663

G 103, G 104, G 105, G 106, G 107, G 108, G 10X, G 114, G 115, G 117, G 120 SD, G 120SW, G 121, G 122, G 125, G 130, G 132, G 133V, G 135 V, G 13X, G 140SW, G 152, G 167, G 170, G 175V, G 6.200, G 6.210, G 60, G 7.220, G 7.240, G 70, G 71, G 8.260, G 8.270, G 84, G 86, G 9.320, G 90

REF.117E

Polia superior TAPE

Comp. 386508

G 103, G 104, G 105, G 106, G 107, G 108, G 10X, G 114, G 115, G 117, G 120 SD, G 120SW, G 121, G 122, G 125, G 130, G 132, G 133V, G 135 V, G 13X, G 140SW, G 152, G 167, G 170, G 175V, G 6.200, G 6.210, G 60, G 7.220, G 7.240, G 70, G 71, G 8.260, G 8.270, G 84, G 86, G 9.320, G 90

REF.117F

POLIA 145 mm com sensor oca, 20 milímetros Ø

Comp. 124670

REF.117G

PULLEY 185 mm, Ø 25 milímetros

Comp. 502818

REF.117H

PULLEY 185 mm, Ø 30 milímetros

Comp. 120662

G 103, G 104, G 105, G 106, G 107, G 108, G 10X, G 114, G 115, G 117, G 120 SD, G 120SW, G 121, G 122, G 125, G 130, G 132, G 133V, G 135 V, G 13X, G 140SW, G 152, G 167, G 170, G 175V, G 6.200, G 6.210, G 60, G 7.220, G 7.240, G 70, G 71, G 8.260, G 8.270, G 84, G 86, G 9.320, G 90

REF.117J

POLIA 145 mm, Ø 25 milímetros G8

Comp. 385289

REF.117K

POLIA 145 mm, Ø 30 milímetros G9

Comp. 385414

REF.126A

POLIA MGT 300 + CONICIDADE BLOQUEIO 25

Comp. 280017 (280028+230006)

G 103, G 104, G 105, G 106, G 107, G 108, G 10X, G 114, G 115, G 117, G 120 SD, G 120SW, G 121, G 122, G 125, G 130, G 132, G 133V, G 135 V, G 13X, G 140SW, G 152, G 167, G 170, G 175V, G 6.200, G 6.210, G 60, G 7.220, G 7.240, G 70, G 71, G 8.260, G 8.270, G 84, G 86, G 9.320, G 90

REF.126B

POLIA MGT 400 + CONICIDADE BLOQUEIO 30

Comp. 280018 (280031+230010)

G 103, G 104, G 105, G 106, G 107, G 108, G 10X, G 114, G 115, G 117, G 120 SD, G 120SW, G 121, G 122, G 125, G 130, G 132, G 133V, G 135 V, G 13X, G 140SW, G 152, G 167, G 170, G 175V, G 6.200, G 6.210, G 60, G 7.220, G 7.240, G 70, G 71, G 8.260, G 8.270, G 84, G 86, G 9.320, G 90

REF.177A

Retentor para Bearing POLIA Ø 20 mm (25x42x8)

Comp. 185025

G 103, G 104, G 105, G 106, G 107, G 108, G 10X, G 114, G 115, G 117, G 120 SD, G 120SW, G 121, G 122, G 125, G 130, G 132, G 133V, G 135 V, G 13X, G 140SW, G 152, G 167, G 170, G 175V, G 6.200, G 6.210, G 60, G 7.220, G 7.240, G 70, G 71, G 8.260, G 8.270, G 84, G 86, G 9.320, G 90

REF.177E

Retentor para Bearing POLIA Ø 25 MM (28x52x7)

Comp. 185923

REF.177C

Retentor para Bearing POLIA Ø 30 MM (38x55x10)

Comp. 185034

REF.183G

Rolamento de esferas (uma linha) 20X42X12 POLIA Ø 20

Comp. 330250,330008

REF.183H

Rolamento de esferas (uma linha) 25X52X15 POLIA Ø 25

Comp. 330251,330053

REF.183I

Rolamento de esferas (uma linha) 30X55X13 POLIA Ø 30

Comp. 330009

REF.168A

PULLEY caixa de mancal

Comp. 120402

G 103, G 104, G 105, G 106, G 107, G 108, G 10X, G 114, G 115, G 117, G 120 SD, G 120SW, G 121, G 122, G 125, G 130, G 132, G 133V, G 135 V, G 13X, G 140SW, G 152, G 167, G 170, G 175V, G 6.200, G 6.210, G 60, G 7.220, G 7.240, G 70, G 71, G 8.260, G 8.270, G 84, G 86, G 9.320, G 90

REF.168B

SUPORTE DE ROLAMENTO INFERIOR

Comp. 120459

G 103, G 104, G 105, G 106, G 107, G 108, G 10X, G 114, G 115, G 117, G 120 SD, G 120SW, G 121, G 122, G 125, G 130, G 132, G 133V, G 135 V, G 13X, G 140SW, G 152, G 167, G 170, G 175V, G 6.200, G 6.210, G 60, G 7.220, G 7.240, G 70, G 71, G 8.260, G 8.270, G 84, G 86, G 9.320, G 90

Todas as marcas comerciais pertencem aos seus respectivos proprietários e seu uso é apenas para fins informativos.

Verifique a Ref. Antes.

WWW.EDUARDOREPUESTOSAGRICOLAS.COM

IVA não incluso

Transporte gratuito da UE para pedidos de 500

REF.147A

RUBBER 20X75X50 JOINT

Comp. 386655

REF.147B

RUBBER 14X30X42 JOINT

Comp. 025012

REF.147C

RUBBER 24X48X44 JOINT

Comp. 025015

REF.147E

RUBBER 28X48X66 JOINT

Comp. 025014

REF.147F

RUBBER JOINT Eliptical 16X65X60

Comp. 025024

REF.147H*

RUBBER JOINT Eliptical PMM

Comp. 385199, 561269

PMM

REF.147G

CAP T 24X48X44

Comp. 385087

REF.162B

DUPLO EXCENTRIC EIXO G115, G60, G152, G122

Comp. 385248

G 60, G 115, G 122, G 152, G6.210

REF.163A

Rolamento EXCENTRIC EIXO 100x150x24

Comp. 330188, 330015

G 60, G 115, G 122, G 152, G6.211

REF.177D

Retentor para Bearing (85X110X18)

Comp. 185045

REF.179A

TENDO BUSH PARA COLHEITA CABEÇA Ø 38 MM

Comp. 265265

G 103, G 104, G 105, G 106, G 107, G 108, G 10X, G 114, G 115, G 117, G 120 SD, G 120SW, G 121, G 122, G 125, G 130, G 132, G 133V, G 135 V, G 13X, G 140SW, G 152, G 167, G 170, G 175V, G 6.200, G 6.210, G 60, G 7.220, G 7.240, G 70, G 71, G 8.260, G 8.270, G 84, G 86, G 9.320, G 90

REF.181A

Compressão da mola para Correia Transportadora POLIAS

Comp. 325001

G 103, G 104, G 105, G 106, G 107, G 108, G 10X, G 114, G 115, G 117, G 120 SD, G 120SW, G 121, G 122, G 125, G 130, G 132, G 133V, G 135 V, G 13X, G 140SW, G 152, G 167, G 170, G 175V, G 6.200, G 6.210, G 60, G 7.220, G 7.240, G 70, G 71, G 8.260, G 8.270, G 84, G 86, G 9.320, G 90

REF.181B*

CINTO DE LIMPEZA PARA compressão da mola

Comp. 325003

G 103, G 104, G 105, G 106, G 107, G 108, G 10X, G 114, G 115, G 117, G 120 SD, G 120SW, G 121, G 122, G 125, G 130, G 132, G 133V, G 135 V, G 13X, G 140SW, G 152, G 167, G 170, G 175V, G 6.200, G 6.210, G 60, G 7.220, G 7.240, G 70, G 71, G 8.260, G 8.270, G 84, G 86, G 9.320, G 90

REF.152C

Caixa de rolamentos ST 20

Comp. 240023, 385098

G 103, G 104, G 105, G 106, G 107, G 108, G 10X, G 114, G 115, G 117, G 120 SD, G 120SW, G 121, G 122, G 125, G 130, G 132, G 133V, G 135 V, G 13X, G 140SW, G 152, G 167, G 170, G 175V, G 6.200, G 6.210, G 60, G 7.220, G 7.240, G 70, G 71, G 8.260, G 8.270, G 84, G 86, G 9.320, G 90

REF.152B

Caixa de rolamentos ST 25

Comp. 385347

G 6.210

REF.152M

Caixa de rolamentos ST 30

Comp. 240040

REF.152D

Caixa de rolamentos NP25

Comp. 240008

G 103, G 104, G 105, G 106, G 107, G 108, G 10X, G 114, G 115, G 117, G 120 SD, G 120SW, G 121, G 122, G 125, G 130, G 132, G 133V, G 135 V, G 13X, G 140SW, G 152, G 167, G 170, G 175V, G 6.200, G 6.210, G 60, G 7.220, G 7.240, G 70, G 71, G 8.260, G 8.270, G 84, G 86, G 9.320, G 90

REF.152J

Caixa de rolamentos NP30

Comp. 240009

REF.152H

Caixa de rolamentos NP35

Comp. 240010

G 103, G 104, G 105, G 106, G 107, G 108, G 10X, G 114, G 115, G 117, G 120 SD, G 120SW, G 121, G 122, G 125, G 130, G 132, G 133V, G 135 V, G 13X, G 140SW, G 152, G 167, G 170, G 175V, G 6.200, G 6.210, G 60, G 7.220, G 7.240, G 70, G 71, G 8.260, G 8.270, G 84, G 86, G 9.320, G 90

REF.152F

Caixa de rolamentos NP45

Comp. 240038

G 103, G 104, G 105, G 106, G 107, G 108, G 10X, G 114, G 115, G 117, G 120 SD, G 120SW, G 121, G 122, G 125, G 130, G 132, G 133V, G 135 V, G 13X, G 140SW, G 152, G 167, G 170, G 175V, G 6.200, G 6.210, G 60, G 7.220, G 7.240, G 70, G 71, G 8.260, G 8.270, G 84, G 86, G 9.320, G 90

GREGOIRE COMPATIBLE

EDUARDO

REF.152G

Caixa de rolamentos SFT 20

Comp. 240018

G 103, G 104, G 105, G 106, G 107, G 108, G 10X, G 114, G 115, G 117, G 120 SD, G 120SW, G 121, G 122, G 125, G 130, G 132, G 133V, G 135 V, G 13X, G 140SW, G 152, G 167, G 170, G 175V, G 6.200, G 6.210, G 60, G 7.220, G 7.240, G 70, G 71, G 8.260, G 8.270, G 84, G 86, G 9.320, G 90

REF.152A

Caixa de rolamentos SFT 25

Comp. 240019

G 6.210, G 7.240, G 8.260

REF.152K

Caixa de rolamentos SFT 30

Comp. 240020

G 7.240

REF.152L

Caixa de rolamentos 35 SFT

Comp. -

REF.152N

Caixa de rolamentos SF 25

Comp. 240014

REF.152P

Caixa de rolamentos SF 30

Comp. 240015

G 8.260

REF.152Q

Caixa de rolamentos 35 SF

Comp. 240016

G 86

REF.152E

Caixa de rolamentos SF 45

Comp. 240017

G 103, G 104, G 105, G 106, G 107, G 108, G 10X, G 114, G 115, G 117, G 120 SD, G 120SW, G 121, G 122, G 125, G 130, G 132, G 133V, G 135 V, G 13X, G 140SW, G 152, G 167, G 170, G 175V, G 6.200, G 6.210, G 60, G 7.220, G 7.240, G 70, G 71, G 8.260, G 8.270, G 84, G 86, G 9.320, G 90

REF.157C*

A porca de ajuste G = 200MM

Comp. 386170

G 175, G.Prima, G 8.270

REF.169C*

DIREITO ajuste de passo HABITAÇÃO

Comp. 122886

G 103, G 104, G 105, G 106, G 107, G 108, G 10X, G 114, G 115, G 117, G 120 SD, G 120SW, G 121, G 122, G 125, G 130, G 132, G 133V, G 135 V, G 13X, G 140SW, G 152, G 167, G 170, G 175V, G 6.200, G 6.210, G 60, G 7.220,

REF.169D*

LEFT ajuste de passo HABITAÇÃO

Comp. 122887

G 103, G 104, G 105, G 106, G 107, G 108, G 10X, G 114, G 115, G 117, G 120 SD, G 120SW, G 121, G 122, G 125, G 130, G 132, G 133V, G 135 V, G 13X, G 140SW, G 152, G 167, G 170, G 175V, G 6.200, G 6.210, G 60, G 7.220, G 7.240, G 70, G 71, G 8.260, G 8.270, G 84, G 86, G 9.320, G 90

REF.176A

Sensor indutivo M12 M12

Comp. 168115

G 103, G 104, G 105, G 106, G 107, G 108, G 10X, G 114, G 115, G 117, G 120 SD, G 120SW, G 121, G 122, G 125, G 130, G 132, G 133V, G 135 V, G 13X, G 140SW, G 152, G 167, G 170, G 175V, G 6.200, G 6.210, G 60, G 7.220, G 7.240, G 70, G 71, G 8.260, G 8.270, G 84, G 86, G 9.320, G 90

REF.199A*

ROD TITULAR DE CONDUÇÃO LIGAÇÃO

Comp. 120676

G 60, G 152

REF.199C*

Titular da vara CONDUÇÃO LIGAÇÃO L140MM

Comp. 123939

G 132

REF.186A

M28

COLHEITA-HEAD NUT 28X150 L.H.

Comp. 385017

G 103, G 104, G 105, G 106, G 107, G 108, G 10X, G 114, G 115, G 117, G 120 SD, G 120SW, G 121, G 122, G 125, G 130, G 132, G 133V, G 135 V, G 13X, G 140SW, G 152, G 167, G 170, G 175V, G 6.200, G 6.210, G 60, G 7.220, G 7.240, G 70, G 71, G 8.260, G 8.270, G 84, G 86, G 9.320, G 90

REF.186B

M28

COLHEITA-HEAD NUT 28X150 de HR

Comp. 385018

G 103, G 104, G 105, G 106, G 107, G 108, G 10X, G 114, G 115, G 117, G 120 SD, G 120SW, G 121, G 122, G 125, G 130, G 132, G 133V, G 135 V, G 13X, G 140SW, G 152, G 167, G 170, G 175V, G 6.200, G 6.210, G 60, G 7.220, G 7.240, G 70, G 71, G 8.260, G 8.270, G 84, G 86, G 9.320, G 90

REF.189B*

CONEXÃO n°17 TIE-BAR 580mm

Comp. 386007

G 140

REF.172A

M24

DETENTORES tirante PIN PARA M24X200

Comp. 124048

G 103, G 104, G 105, G 106, G 107, G 108, G 10X, G 114, G 115, G 117, G 120 SD, G 120SW, G 121, G 122, G 125, G 130, G 132, G 133V, G 135 V, G 13X, G 140SW, G 152, G 167, G 170, G 175V, G 6.200, G 6.210, G 60, G 7.220, G 7.240, G 70, G 71, G 8.260, G 8.270, G 84, G 86, G 9.320, G 90

REF.172C

M24

DETENTORES tirante PIN D28 L168 M24X200

Comp. 501684

REF.400A*

PINTURA AMARELA (SPRAY 0,4L)

Comp. 245242

Todas as marcas comerciais pertencem aos seus respectivos proprietários e seu uso é apenas para fins informativos.

Verifique a Ref. Antes.

WWW.EDUARDOREPUESTOSAGRICOLAS.COM

IVA não incluso

Transporte gratuito da UE para pedidos de 500

REF.172L

M24

PARAFUSO vigas M24X175 ESPECIAL

Comp. 501684

REF.172M

M24

NUT vigas M24 ESPECIAL

Comp. -

REF.172N

M24

PARAFUSO M24X160 ZN

Comp. 65235

REF.172H

M24

NUT com freio M24 ZN

Comp. 65973

REF.172G

M24

WHASER M24 ZN

Comp. 65071

REF.172B

M20

CONEXÃO ROD PARAFUSO M20X151

Comp. 386118

REF.172J

M20

JOINER tirante NUT M20X150

Comp. 386120

REF.172K

M20

H PORCA M20X150 - ZINCO

Comp. 65786

REF.172D

M16

PARAFUSO vigas M16X130

Comp. 385353

G 103, G 104, G 105, G 106, G 107, G 108, G 10X, G 114, G 115, G 117, G 120 SD, G 120SW, G 121, G 122, G 125, G 130, G 132, G 133V, G 135 V, G 13X, G 140SW, G 152, G 167, G 170, G 175V, G 6.200, G 6.210, G 60, G 7.220, G 70, G 71, G 8.260, G 8.270, G 84, G 86, G 9.320, G 90

REF.172E

M16

NUT vigas M16 ESPECIAL

Comp. 385355

G 103, G 104, G 105, G 106, G 107, G 108, G 10X, G 114, G 115, G 117, G 120 SD, G 120SW, G 121, G 122, G 125, G 130, G 132, G 133V, G 135 V, G 13X, G 140SW, G 152, G 167, G 170, G 175V, G 6.200, G 6.210, G 60, G 7.220, G 70, G 71, G 8.260, G 8.270, G 84, G 86, G 9.320, G 90

REF.172F

M16

NUTS COM AUTO FREIO M16 ZN

Comp. 65016

G 65, G 66, G 120 SW, G 140 SW, G 167, G 240, G9.320, G9.330, G9.330 Olive, G10.330,

REF.160B

M14

JOINER tirante NUT M14

Comp. 385189

G 103, G 104, G 105, G 106, G 107, G 108, G 10X, G 114, G 115, G 117, G 120 SD, G 120SW, G 121, G 122, G 125, G 130, G 132, G 133V, G 135 V, G 13X, G 140SW, G 152, G 167, G 170, G 175V, G 6.200, G 6.210, G 60, G 7.220, G 7.240, G 70, G 71, G 8.260, G 8.270, G 84, G 86, G 9.320, G 90

REF.160F

M14

BLOQUEIO NUT M14 - ZINCO

Comp. 65015

REF.161B

M14

CONEXÃO ROD PARAFUSO M14X110

Comp. 386478

REF.169E

FAN GRINDER

Comp. 120451

G 103, G 104, G 105, G 106, G 107, G 108, G 10X, G 114, G 115, G 117, G 120 SD, G 120SW, G 121, G 122, G 125, G 130, G 132, G 133V, G 135 V, G 13X, G 140SW, G 152, G 167, G 170, G 175V, G 6.200, G 6.210, G 60, G 7.220, G 7.240, G 70, G 71, G 8.260, G 8.270, G 84, G 86, G 9.320, G 90

REF.171A

CONDUÇÃO DO EIXO

Comp. 123437

G 103, G 104, G 105, G 106, G 107, G 108, G 10X, G 114, G 115, G 117, G 120 SD, G 120SW, G 121, G 122, G 125, G 130, G 132, G 133V, G 135 V, G 13X, G 140SW, G 152, G 167, G 170, G 175V, G 6.200, G 6.210, G 60, G 7.220, G 7.240, G 70, G 71, G 8.260, G 8.270, G 84, G 86, G 9.320, G 90

REF.193A*

Luz traseira do HABITAÇÃO

Comp. 165312

REF.193B

DIREITO/ESQUERDO INTERMITENTE

Comp. 165213, 165214

REF.193D

FAROL COMPLETO

Comp. 165216

REF.193E*

GALIBO LUZ

Comp. 166565

G 86

REF.188D

O carreto 17 dentes, 12.7S (1/2) de diâmetro, 20 mm, 8 mm chaveta G60 correia

Comp. 385251

REF.188E

O carreto 17 dentes, 12.7S (1/2) de diâmetro 25 para cinto G60, G152, G8

Comp. 385078

REF.188P

PINION N 17 dentes, (3/4) de diâmetro por 25 G2, G3

Comp. 386300

REF.188W

O carreto 17 dentes, (5/8) de diâmetro 25, chaveta 8 milímetros

Comp. 386907

REF.188H

PINHÃO 19 dentes, 19.05S (3/4), diam25 para G152 eixo excêntrico

Comp. 385217

G 122

REF.188B

PINION 21 dentes, 12.7S (1/2) de diâmetro 25 Poulley G60, G152, G8, G152 correia

Comp. 385123

REF.188J

PINHÃO 21 dentes, 19.05S (3/4), diam 25 para G8 eixo excêntrico

Comp. 385370

REF.188F

PINHÃO 25 dentes, 19.05S (3/4), diam 25 para G60 eixo excêntrico

Comp. 385233

REF.188L

PINHÃO 25 dentes, 12,7S (1/2), diam 25, chaveta 8 milímetros

Comp. 387182

REF.188Q

PINHÃO 25 dentes, (1/2), diam 25, chaveta 8 milímetros

Comp. 387183

REF.188C

PINHÃO 30 dentes, 12.7S (1/2), diam 25mm, chaveta 8 milímetros Poulley G152, G8

Comp. 386550

REF.188K

PINHÃO 30 dentes, (3/4), diam 45, chaveta 8 milímetros para G8 eixo excêntrico

Comp. 250034

REF.188R

PINION 30 dentes, (3/8), de diâmetro 16 mm, 5 milímetros chaveta

Comp. 385947

REF.188G

PINHÃO 35 dentes, 19.05S (3/4), diam 25 para G60 eixo excêntrico

Comp. 255009

REF.188A

PINION 38 dentes, 12.7S (1/2), diam25, chaveta 8 milímetros Poulley G60

Comp. 385242

G 103, G 104, G 105, G 106, G 107, G 108, G 10X, G 114, G 115, G 117, G 120 SD, G 120SW, G 121, G 122, G 125, G 130, G 132, G 133V, G 135 V, G 13X, G 140SW, G 152, G 167, G 170, G 175V, G 6.200, G 6.210, G 60, G 7.220, G 7.240, G 70, G 71, G 8.260, G 8.270, G 84, G 86, G 9.320, G 90

REF.188V

PINION 38 dentes, (1/2), 25 Diam, chaveta 8 milímetros

Comp. 385242

G 103, G 104, G 105, G 106, G 107, G 108, G 10X, G 114, G 115, G 117, G 120 SD, G 120SW, G 121, G 122, G 125, G 130, G 132, G 133V, G 135 V, G 13X, G 140SW, G 152, G 167, G 170, G 175V, G 6.200, G 6.210, G 60, G 7.220, G 7.240, G 70, G 71, G 8.260, G 8.270, G 84, G 86, G 9.320, G 90

REF.188I

PINHÃO 38 dentes, 19.05S (3/4), Diam 45, chaveta 14 milímetros

Comp. 250064

G 122

REF.188U

PINHÃO 38 dentes, 19.05S (3/4), Diam 45, chaveta 8 milímetros

Comp. 385076

REF.190A

BUSCH 28x38x66

Comp. 385997

G 103, G 104, G 105, G 106, G 107, G 108, G 10X, G 114, G 115, G 117, G 120 SD, G 120SW, G 121, G 122, G 125, G 130, G 132, G 133V, G 135 V, G 13X, G 140SW, G 152, G 167, G 170, G 175V, G 6.200, G 6.210, G 60, G 7.220, G 7.240, G 70, G 71, G 8.260, G 8.270, G 84, G 86, G 9.320, G 90

REF.190B

EIXO Ø25mm POLIA DE TRACÇÃO

Comp. 385125

Todas as marcas comerciais pertencem aos seus respectivos proprietários e seu uso é apenas para fins informativos.

Verifique a Ref. Antes.

WWW.EDUARDOREPUESTOSAGRICOLAS.COM

IVA não incluso

Transporte gratuito da UE para pedidos de 500

REF.191A

CORRENTE ÚNICA 12,70 1/2 "CORREIA 1m

Comp. 95070

REF.191B

UNIÃO DE CORRENTE ÚNICA 12.70

Comp. 95071

REF.191C

MEIO LINK SINGLE CHAIN 12.70

Comp. 95072

REF.198D*

TRASEIRO polia da guia DIREITO

Comp. 355006

REF.191D

CORRENTE REFORÇADA 19,05 60H 3/4 "SHAKE 1m

Comp. 95056

REF.191E

UNIÃO DE CORRENTE ÚNICA 19.05

Comp. 95057

REF.191F

MEIO LINK SINGLE CHAIN 19.05

Comp. 95058

REF.198E*

TRASEIRO POLIA GUIA PARA A ESQUERDA

Comp. 355007

REF.178B

FILTRO COMBUSTÍVEL

Comp. 216252

G7.230

REF.178C

FILTRO COMBUSTÍVEL

Comp. 170201

G8.260, G7.240, G9.320

REF.178D

PRÉ-FILTRO GASOIL

Comp. 216251

G7.230

REF.178E

PRÉ-FILTRO GASOIL

Comp. 216177

G8.260, G7.240

REF.178F

FILTRO ÓLEO

Comp. 216191

G7.230

REF.178G

FILTRO ÓLEO

Comp. 170199

G8.260, G7.240, G9.320

REF.178H

FILTRO HIDRÁULICO

Comp. 170203

G7.230, G8.260, 7.240, G9.320

REF.178I

FILTRO HIDRÁULICO

Comp. 170055

G8.260, G7.240, G9.320

REF.178J

FILTRO DE AR EXTERIOR

Comp. 215466, 170120

G7.230, G8.260, G8.320

REF.178K

FILTRO DE AR INTERIOR

Comp. 215467, 170121

G7.230, G8.260

REF.178L

FILTRO DE AR EXTERIOR

Comp. 170141

G7.230, G8.260, G8.321

REF.178M

FILTRO DE AR INTERIOR

Comp. 171140

G7.240, G9.320

PELLENC COMPATIBLE

EDUARDO

REF.307B

AGITANDO ROD STD

Comp. 3938602

3045, 3050,3052, 3100,3125, 3140, 3200, 4380, 4390, 4420, 4460, 8390 ...

REF.309B

AGITANDO ARM GR / LM 05

Comp. 3938603

3300, 3400, 4050, 4056, 4560, 8590

REF.329B

AGITANDO ROD OPTIMUM PRESSIONADO DE AUTO-

Comp. 8927800/5646845

8290, 8350, 8270, 8370, 8390, 8470, 8490, 8590

REF.308B

AGITADOR ARM 80XX 09

Comp. 3971722

8290, 8350, 8270, 8370, 8390, 8470, 8490, 8590, 890, MAV 803, MAV 8050

NOVO !

REF.367F

AGITANDO ROD STD

Comp. 3972836

3045, 3050,3052, 3100,3125, 3140, 3200, 4380, 4390, 4420, 4460, 8390

NOVO !

REF.367J

AGITANDO ROD OPTIMUM

Comp. 125000

Optimum 530, Optimum 550, Optimum 570, Optimum 590, Optimum 750, Optimum 890, 60, XL 60, 8050

REF.367E*

AGITANDO ROD GR ORIGINAL

Comp. -

3300, 3400, 4050, 4056, 4560, 8590

REF.331A

AGITANDO ROD SUPERIOR GUIA

Comp. 3980847

3050,3100,3200,4240,4320,4340,4360,4380,4420,4460,4560,8290,8350,8270,8370,8390,8470,8490,8590, MAV 8030, MAV 8050, MAV 8090

REF.346A*

APOIO CATCHER TRAY, PRE-modelo 2006

Comp. 3932517

3045, 3050,3052, 3100,3125, 3140, 3200, 4380, 4390, 4420, 4460, 8390 ...

REF.336A

FIXAÇÃO DE JUNTA DE PLACA 2mm

Comp. 39125455

3050,3100,3200,4240,4320,4340,4360,4380,4420,4460,4560,8290,8350,8270,8370,8390,8470,8490,8590, Optimum 530, Optimum 550, Optimum 570, Optimum 590, Optimum 750, , Optimum 890, MAV 8030, MAV 8050, MAV 8090

REF.301D

RIGHTCATCHER TRAY, PRE-modelo 2006

Comp. 3918313

3050,3100,3200,4240,4320,4340,4360,4380,4420,4460,4560,8290,8350,8270,8370,8390,8470,8490,8590, Optimum 530, Optimum 550, Optimum 570, Optimum 590, Optimum 750, , Optimum 890, MAV 8030, MAV 8050, MAV 8090

REF.302D

LEFT CATCHER TRAY, PRE-modelo 2006

Comp. 3918311

3050,3100,3200,4240,4320,4340,4360,4380,4420,4460,4560,8290,8350,8270,8370,8390,8470,8490,8590, Optimum 530, Optimum 550, Optimum 570, Optimum 590, Optimum 750, , Optimum 890, MAV 8030, MAV 8050, MAV 8090

REF.303D

RIGHTCATCHER TRAY POST-206

Comp. 3964866

3050,3100,3200,4240,4320,4340,4360,4380,4420,4460,4560,8290,8350,8270,8370,8390,8470,8490,8590

REF.304D

LEFT CATCHER TRAY POST-206

Comp. 3964868

3050,3100,3200,4240,4320,4340,4360,4380,4420,4460,4560,8290,8350,8270,8370,8390,8470,8490,8590

REF.305D

cotovelo esquerdo

Comp. 3964865

3050,3100,3200,4240,4320,4340,4360,4380,4420,4460,4560,8290,8350,8270,8370,8390,8470,8490,8590

REF.306D

cotovelo direito

Comp. 3964864

3050,3100,3200,4240,4320,4340,4360,4380,4420,4460,4560,8290,8350,8270,8370,8390,8470,8490,8590

REF.315D

Cotovelo esquerdo OPTIMUM

Comp. 3911850

Optimum 530, Optimum 550, Optimum 570, Optimum 590, Optimum 750, Optimum 890, MAV 8030, MAV 8050, MAV 8090

REF.316D

Cotovelo direito OPTIMUM

Comp. 3911851

Optimum 530, Optimum 550, Optimum 570, Optimum 590, Optimum 750, Optimum 890, MAV 8030, MAV 8050, MAV 8090

Verifique a Ref. Antes.

Todas as marcas comerciais pertencem aos seus respectivos proprietários e seu uso é apenas para fins informativos.

WWW.EDUARDOREPUESTOSAGRICOLAS.COM

IVA não incluso

Transporte gratuito da UE para pedidos de 500

PELLENC COMPATIBLE

EDUARDO

REF.317D

LEFT CATCHER TRAY

Comp. 39125435

Optimum 530, Optimum 550, Optimum 570, Optimum 590, Optimum 750, Optimum 890

REF.318D

DIREITO CATCHER TRAY

Comp. 39125437

Optimum 530, Optimum 550, Optimum 570, Optimum 590, Optimum 750, Optimum 890

REF.332A

Distanciando PLACA escama OPTIMUM

Comp. 120856

Optimum 530, Optimum 550, Optimum 570, Optimum 590, Optimum 750, Optimum 890, MAV 8030, MAV 8050, MAV 8090

REF.333A*

PARAFUSOS - INSERT - WASHER escama OPTIMUM

Comp. 133642,02913,133636

Optimum 530, Optimum 550, Optimum 570, Optimum 590, Optimum 750, Optimum 890, MAV 8030, MAV 8050, MAV 8090

REF.351A

FICHA DIREITO DA UNIÃO COTOVELO IDEAL PARA CHASSIS

Comp. 111865

Optimum 530, Optimum 550, Optimum 570, Optimum 590, Optimum 750, Optimum 890, MAV 8030, MAV 8050, MAV 8090

REF.351B

Botão esquerdo UNIÃO COTOVELO IDEAL PARA CHASSIS

Comp. 111866

Optimum 530, Optimum 550, Optimum 570, Optimum 590, Optimum 750, Optimum 890, MAV 8030, MAV 8050, MAV 8090

REF.379F

COTOVELO FLAKE INJETADO BRANCO

Comp. -

Optimum 530, Optimum 550, Optimum 570, Optimum 590, Optimum 750, Optimum 890, MAV 8030, MAV 8050, MAV 8091

REF.379D

Com rosca dupla inserção para FLOCOS INJETADO

Comp. 39134795

Optimum 530, Optimum 550, Optimum 570, Optimum 590, Optimum 750, Optimum 890, MAV 8030, MAV 8050, MAV 8090

REF.378F

NOVO ! **REFORÇADO !**

INJETADO CATCHER TRAY, LEFT OPTIMUM FORTALECIDA

Comp. 131765

Optimum 530, Optimum 550, Optimum 570, Optimum 590, Optimum 750, Optimum 890, MAV 8030, MAV 8050, MAV 8092

REF.379G

NOVO ! **REFORÇADO !**

INJETADO CATCHER TRAY, OPTIMUM DIREITO FORTALECIDA

Comp. 131766

Optimum 530, Optimum 550, Optimum 570, Optimum 590, Optimum 750, Optimum 890, MAV 8030, MAV 8050, MAV 8092

REF.379E

PARAFUSO TH SEM RIB M8-30 CL8,8 GeoMe

Comp. 139094

Optimum 530, Optimum 550, Optimum 570, Optimum 590, Optimum 750, Optimum 890, MAV 8030, MAV 8050, MAV 8090

REF.379C

PLUMBING BLANCHE ESCAPE

Comp. 39137242

Optimum 530, Optimum 550, Optimum 570, Optimum 590, Optimum 750, Optimum 890, MAV 8030, MAV 8050, MAV 8090

REF.310A

AGITANDO haste de acoplamento

Comp. 3937488

3050,3100,3200,4240,4320,4340,4360,4380,4420,4460,4560,8290,8350,8270,8370,8390,8470,8490,8590, Optimum 530, Optimum 550, Optimum 570, Optimum 590, Optimum 750, Optimum 890, MAV 8030, MAV 8050, MAV 8090

REF.311A

STAINLESS STEEL AGITANDO ROD placa de acoplamento

Comp. 3949603

3050,3100,3200,4240,4320,4340,4360,4380,4420,4460,4560,8290,8350,8270,8370,8390,8470,8490,8590, Optimum 530, Optimum 550, Optimum 570, Optimum 590, Optimum 750, Optimum 890, MAV 8030, MAV 8050, MAV 8090

REF.312A

Kit completo para agitar ROD (14X30X42)

Comp. 3967007

3050,3100,3200,4240,4320,4340,4360,4380,4420,4460,4560,8290,8350,8270,8370,8390,8470,8490,8590, Optimum 530, Optimum 550, Optimum 570, Optimum 590, Optimum 750, Optimum 890, MAV 8030, MAV 8050, MAV 8090

REF.313A

KIT para agitar ROD COMPLET

Comp. 3938604

3050,3100,3200,4240,4320,4340,4360,4380,4420,4460,4560,8290,8350,8270,8370,8390,8470,8490,8590, Optimum 530, Optimum 550, Optimum 570, Optimum 590, Optimum 750, Optimum 890, MAV 8030, MAV 8050, MAV 8090

REF.314A

Kit 2 PARAFUSOS 8,8 M8X40 + 2 porcas

Comp. -

3050,3100,3200,4240,4320,4340,4360,4380,4420,4460,4560,8290,8350,8270,8370,8390,8470,8490,8590, Optimum 530, Optimum 550, Optimum 570, Optimum 590, Optimum 750, Optimum 890, MAV 8030, MAV 8050, MAV 8090

REF.334A

RUBBER JOINT para agitar ROD (14X30X42)

Comp. 3904779

3050,3100,3200,4240,4320,4340,4360,4380,4420,4460,4560,8290,8350,8270,8370,8390,8470,8490,8590, Optimum 530, Optimum 550, Optimum 570, Optimum 590, Optimum 750, Optimum 890, MAV 8030, MAV 8050, MAV 8090

IVA não incluso

Transporte gratuito da UE para pedidos de €

Todas as marcas comerciais pertencem aos seus respectivos proprietários e seu uso é apenas para fins informativos.

WWW.EDUARDOREPUESTOSAGRICOLAS.COM

Verifique a Ref. Antes.

PELLENC COMPATIBLE

EDUARDO

REF.344A

PORCA FECHADO M8 (agitação de acoplamento da haste)

Comp. -

3050,3100,3200,4240,4320,4340,4360,4380,4420,4460,4560,8290,8350,8270,8370,8390,8470,8490,8590, Optimum 530, Optimum 550, Optimum 570, Optimum 590, Optimum 750, Optimum 890, MAV 8030, MAV 8050, MAV 8090

REF.344B

PORCA FECHADO M12 (Silentblock)

Comp. 3934888

3050,3100,3200,4240,4320,4340,4360,4380,4420,4460,4560,8290,8350,8270,8370,8390,8470,8490,8590, Optimum 530, Optimum 550, Optimum 570, Optimum 590, Optimum 750, Optimum 890, MAV 8030, MAV 8050, MAV 8090

☆ REF.345B NOVO !

CLIP TIPO PORCA CATIVA M8x5

Comp. 3965078

3045, 3050,3052, 3100,3125, 3140, 3200, 4380, 4390, 4420, 4460, 8390 ...

☆ REF.345C NOVO !

KIT PARA AGITADORES INJETÁVEIS 2 PARAFUSOS M8X60 8.8 + 2 PORCAS M8 + 2 LAVADORES

Comp. -

3045, 3050,3052, 3100,3125, 3140, 3200, 4380, 4390, 4420, 4460, 8390

REF.342C

SEM REMESSA

CORREIA 250 (sem grampo) 1m

Comp. -

3050, 3100, 3200, 4240, 4320, 4340, 4360, 4380, 4420, 4460, 4560, 8290, 8350, 8270, 8370, 8390, 8470, 8490, 8592

REF.342H

SEM REMESSA

CORREIA 250 (sem grampo) 11m

Comp. -

3050, 3100, 3200, 4240, 4320, 4340, 4360, 4380, 4420, 4460, 4560, 8290, 8350, 8270, 8370, 8390, 8470, 8490, 8597

REF.342D

SEM REMESSA

CORREIA 310 (sem grampo) 1m

Comp. -

3050, 3100, 3200, 4240, 4320, 4340, 4360, 4380, 4420, 4460, 4560, 8290, 8350, 8270, 8370, 8390, 8470, 8490, 8593

REF.342I

SEM REMESSA

CORREIA 310 (sem grampo) 11m

Comp. -

3050, 3100, 3200, 4240, 4320, 4340, 4360, 4380, 4420, 4460, 4560, 8290, 8350, 8270, 8370, 8390, 8470, 8490, 8598

REF.340F

aço inoxidável grampo para 250 mm unhas Cu

Comp. -

REF.340G

aço inoxidável grampo para 310 mm unhas Cu

Comp. -

REF.145C

CORREIA DE GUIA INOX 250 3 mm de diâmetro

Comp. -

3050,3100,3200,4240,4320,4340,4360,4380,4420,4460,4560,8290,8350,8270,8370,8390,8470,8490,8590

REF.145D

CORREIA DE GUIA INOX 310 3 mm de diâmetro

Comp. -

3050,3100,3200,4240,4320,4340,4360,4380,4420,4460,4560,8290,8350,8270,8370,8390,8470,8490,8590

REF.339L

GRAMPO aço inox com unhas de cobre (250 mm)

Comp. -

REF.339M

GRAMPO aço inox com unhas de cobre (320 milímetros)

Comp. -

REF.154G

CORREIA por m2, 2 camadas, Liso / suave. ESPESSURA 3.2 MM. (1m x

Comp. -

PMME, PMM, GMM, G 50, G 50 A, G 50 E, G 55 H, G 55 I, G 55 VH, G 56 I, G 60, G 60 I, G 60 KW, G 60 WH, G 65, G 66, G 70, G 70 A, G 71, G 80, G 84, G 85, G 86, G 90, G 103, G 104, G 105, G 106, G 107, G 108, G 110, G 114, G 115, G 116, G 117, G 120, G 120 SW, G 121, G 122, G 125, G 130, G 132, G 132 BC, G 135V, G 140 SW, G 151, G 152, G 152 BC, G 152 I, G 160, G 167, G 170, G 175 V, G 240, G Prima, G1.190, G1.200, G2.220, G2.230, G3.220, G3.230, G3.250, G4.200, G4.210, G4.220, G5.310, G5.320, G6.200, G6.210, G7.200, G7.210, G7.220,

REF.154H

CORREIA por m2, 3 camadas, Liso / suave. ESPESSURA 4,3 MM. (1m x Largura de 450 milímetros)

Comp. -

PMME, PMM, GMM, G 50, G 50 A, G 50 E, G 55 H, G 55 I, G 55 VH, G 56 I, G 60, G 60 I, G 60 KW, G 60 WH, G 65, G 66, G 70, G 70 A, G 71, G 80, G 84, G 85, G 86, G 90, G 103, G 104, G 105, G 106, G 107, G 108, G 110, G 114, G 115, G 116, G 117, G 120, G 120 SW, G 121, G 122, G 125, G 130, G 132, G 132 BC, G 135V, G 140 SW, G 151, G 152, G 152 BC, G 152 I, G 160, G 167, G 170, G 175 V, G 240, G Prima, G1.190, G1.200, G2.220, G2.230, G3.220, G3.230, G3.250, G4.200, G4.210, G4.220, G5.310, G5.320, G6.200, G6.210, G7.200, G7.210, G7.220,

REF.339P

GRAMPO RS125 aço inox (250 mm)

Comp. -

REF.339Q

GRAMPO RS125 aço inox (320 milímetros)

Comp. -

REF.351C

Unhas cobre com TIP (2,1x17 mm)

Comp. -

3050, 3100, 3200, 4240, 4320, 4340, 4360, 4380, 4420, 4460, 4560, 8290, 8350, 8270, 8370, 8390, 8470, 8490, 8590

REF.343A

PULLEY SCRAPER

Comp. 3911290

3050, 3100, 3200, 4240, 4320, 4340, 4360, 4380, 4420, 4460, 4560, 8290, 8350, 8270, 8370, 8390, 8470, 8490, 8590

Verifique a Ref. Antes.

Todas as marcas comerciais pertencem aos seus respectivos proprietários e seu uso é apenas para fins informativos.

WWW.EDUARDOREPUESTOSAGRICOLAS.COM

IVA não incluso

Transporte gratuito da UE para pedidos de 500

PELLENC COMPATIBLE

EDUARDO

REF.319A

INFERIOR rolo liso 250 milímetros

Comp. 3949620

3045, 3050,3052, 3100,3125, 3140, 3200, 4380, 4390, 4420, 4460, 8390 ...

REF.320A

ABOMBED MOTOR 250 milímetros ROLO

Comp. 3984573

3045, 3050,3052, 3100,3125, 3140, 3200, 4380, 4390, 4420, 4460, 8390 ...

REF.321A

INFERIOR rolo liso 310 milímetros

Comp. 3949616

3300, 3400, 4050, 4056, 4560, 8590

REF.322A

ROLO DE MOTOR ABOMBED. 310 milímetros

Comp. 3984572

3300, 3400, 4050, 4056, 4560, 8590

REF.888A

Transportador de rolos de apoio (LONGO GRR25)

Comp. 3937508

3050, 3100, 3200, 4240, 4320, 4340, 4360, 4380, 4420, 4460, 4560, 8290, 8350, 8270, 8370, 8390, 8470, 8490, 8590

REF.889A

Reten de transportador de rolos de apoio 41,6-25,5-0,5

Comp. 79417, 01161

3050, 3100, 3200, 4240, 4320, 4340, 4360, 4380, 4420, 4460, 4560, 8290, 8350, 8270, 8370, 8390, 8470, 8490, 8590

REF.341A

STAINLESS STEEL BALDE DE 250 MM PELLENC CORREIA

Comp. -

3050, 3100, 3200, 4240, 4320, 4340, 4360, 4380, 4420, 4460, 4560, 8290, 8350, 8270, 8370, 8390, 8470, 8490, 8590

REF.341B

STAINLESS STEEL BALDE DE 310 MM PELLENC CORREIA

Comp. -

3050, 3100, 3200, 4240, 4320, 4340, 4360, 4380, 4420, 4460, 4560, 8290, 8350, 8270, 8370, 8390, 8470, 8490, 8590

REF.378A*

FRENTE AGITANDO APOIO ROD

Comp. 3916063

3300, 3400, 4050, 4056, 4560, 8590, 3045, 3050,3052, 3100,3125, 3140, 3200, 4380, 4390, 4420, 4460, 8390 ...

REF.378B*

LEIA AGITANDO haste de suporte 2000

Comp. 3916064

3300, 3400, 4050, 4056, 4560, 8590, 3045, 3050,3052, 3100,3125, 3140, 3200, 4380, 4390, 4420, 4460, 8390 ...

REF.378C*

FIXAÇÃO FLANGE AGITANDO APOIO ROD

Comp. 3916065

3300, 3400, 4050, 4056, 4560, 8590, 3045, 3050,3052, 3100,3125, 3140, 3200, 4380, 4390, 4420, 4460, 8390 ...

REF.378E*

FLANGE DE APOIO-PARAFUSO M12 CL10

Comp. -

Optimum 530, Optimum 550, Optimum 570, Optimum 590, Optimum 750, Optimum 890, MAV 8030, MAV 8050, MAV 8091

REF.335A

PLASTIC transporte de rolo, 78mm COMPLET

Comp. 3946291

3045, 3050,3052, 3100,3125, 3140, 3200, 4380, 4390, 4420, 4460, 8390 ...

REF.335B

ROLO DE TRANSPORTE DE PLÁSTICO, COMPLETA 88 milímetros DIAM

Comp. 39464816

3300, 3400, 4050, 4056, 4560, 8590

REF.335C

GUIADA CORREIA DO ROLO sem rolamentos E SEM EIXO Ø76

Comp. 3946290

3045, 3050,3052, 3100,3125, 3140, 3200, 4380, 4390, 4420, 4460, 8390 ...

REF.335D

Transportador de rolos Ø69 / 88

Comp. 3962838

3300, 3400, 4050, 4056, 4560, 8590

REF.355A

TAPE GUIADA eixo do rolo

Comp. 3942005

3050,3100,3200,4240,4320,4340,4360,4380,4420,4460,4560,8290,8350,8270,8370,8390,8470,8490,8590, Optimum 530, Optimum 550, Optimum 570, Optimum 590, Optimum 750, Optimum 890, MAV 8030, MAV 8050, MAV 8090

REF.353A

NYLON BEARING Ø30-31

Comp. 3937603, 3966137

Optimum 530, Optimum 550, Optimum 570, Optimum 590, Optimum 750, Optimum 890, MAV 8030, MAV 8050, MAV 8092

REF.354A

LEFT defletor. TAPE ROLO GUIADA

Comp. 3911237

3050,3100,3200,4240,4320,4340,4360,4380,4420,4460,4560,8290,8350,8270,8370,8390,8470,8490,8590, Optimum 530, Optimum 550, Optimum 570, Optimum 590, Optimum 750, Optimum 890, MAV 8030, MAV 8050, MAV 8090

REF.354B

DEFLECTOR DIREITO TAPE GUIADA ROLO

Comp. 3911236

3050, 3100, 3200, 4240, 4320, 4340, 4360, 4380, 4420, 4460, 4560, 8290, 8350, 8270, 8370, 8390, 8470, 8490, 8590

PELLENC COMPATIBLE

EDUARDO

REF.358A*

CUP 130/30 * 2 rolo liso

Comp. 3911208

3050,3100,3200,4240,4320,4340,4360,4380,4420,4460,4560,8290,8350,8270,8370,8390,8470,8490,8590, Optimum 530, Optimum 550, Optimum 570, Optimum 590, Optimum 750, Optimum 890, MAV 8030, MAV 8050, MAV 8090

REF.359A*

PRINCIPAL polia 2005

Comp. 3949615, 3945813

3050,3100,3200,4240,4320,4340,4360,4380,4420,4460,4560,8290,8350,8270,8370,8390,8470,8490,8590, Optimum 530, Optimum 550, Optimum 570, Optimum 590, Optimum 750, Optimum 890, MAV 8030, MAV 8050, MAV 8090

REF.371A*

PALPADOR HAUTEUR GOMME STD

Comp. 3923825

3050, 3100, 3200, 4240, 4320, 4340, 4360, 4380, 4420, 4460, 4560, 8290, 8350, 8270, 8370, 8390, 8470, 8490, 8590

REF.380A*

LARANJA PINTURA (SPRAY 0,4L)

Comp. 1640055

3050,3100,3200,4240,4320,4340,4360,4380,4420,4460,4560,8290,8350,8270,8370,8390,8470,8490,8590, Optimum 530, Optimum 550, Optimum 570, Optimum 590, Optimum 750, Optimum 890, MAV 8030, MAV 8050, MAV 8090

REF.349A

DIREITO RIO ABAIXO SKATE TDR2-4-5

Comp. 39107147

8290,8350,8270,8370,8390,8470,8490,8590, MAV 8030, MAV 8050, MAV 8090

REF.350A

VOLTA PARA CIMA SKATE TDR2-4-5

Comp. 39107148

8290,8350,8270,8370,8390,8470,8490,8590, MAV 8030, MAV 8050, MAV 8090

REF.364A*

APOIO SUP. STD EIXO TRASEIRO E GR UPPER

Comp. 3901106

3050,3100,3200,4240,4320,4340,4360,4380,4420,4460,4560,8290,8350,8270,8370,8390,8470,8490,8590, Optimum 530, Optimum 550, Optimum 570, Optimum 590, Optimum 750, Optimum 890, MAV 8030, MAV 8050, MAV 8090

REF.365A*

APOIO INF. E SUP. EIXO FRONTAL STD

Comp. 3901099

3050,3100,3200,4240,4320,4340,4360,4380,4420,4460,4560,8290,8350,8270,8370,8390,8470,8490,8590, Optimum 530, Optimum 550, Optimum 570, Optimum 590, Optimum 750, Optimum 890, MAV 8030, MAV 8050, MAV 8090,96,8

REF.365B*

Rolamento inferior COLUNAS carcaça traseira

Comp. 3912544

3050,3100,3200,4240,4320,4340,4360,4380,4420,4460,4560,8290,8350,8270,8370,8390,8470,8490,8590, Optimum 530, Optimum 550, Optimum 570, Optimum 590, Optimum 750, Optimum 890, MAV 8030, MAV 8050, MAV 8090

REF.374A*

Bucha silenciosa D = 100 = H 30 60SH (EXCENTRIC MAV)

Comp. 3916015

3050, 3100, 3200, 4240, 4320, 4340, 4360, 4380, 4420, 4460, 4560, 8290, 8350, 8270, 8370, 8390, 8470, 8490, 8590

REF.374B*

RUBBER 70SH JOINT

Comp. 3969847

3050, 3100, 3200, 4240, 4320, 4340, 4360, 4380, 4420, 4460, 4560, 8290, 8350, 8270, 8370, 8390, 8470, 8490, 8590

REF.374C*

HEXAGONAL BORRACHA MISTO H28 M8x20 35SHA

Comp. 3980486

3050, 3100, 3200, 4240, 4320, 4340, 4360, 4380, 4420, 4460, 4560, 8290, 8350, 8270, 8370, 8390, 8470, 8490, 8590

REF.330A

FRENTE FLAP PARA STD HARVERSTING CABEÇA

Comp. 3931961

3050,3100,3200,4240,4320,4340,4360,4380,4420,4460,4560,8290,8350,8270,8370,8390,8470,8490,8590

REF.330B

OPTIMUM MUD ANTERIOR

Comp. -

Optimum 530, Optimum 550, Optimum 570, Optimum 590, Optimum 750, Optimum 890, MAV 8030, MAV 8050, MAV 8090

REF.888B

APOIO INF rolamento. E SUP. EIXO FRONTAL STD Ø35 YAR 207F

Comp. 3903489

3050, 3100, 3200, 4240, 4320, 4340, 4360, 4380, 4420, 4460, 4560, 8290, 8350, 8270, 8370, 8390, 8470, 8490, 8591

REF.346D*

APOIO CATCHER TRAY, PRE-modelo 2006

Comp. 3937304

3040, 3050, 3052, V600LM-ACTIV 600LM; V600GR-ACTIV 600GR; 600GRE SMART; GR SMART-600GR; SMART-ACTIV550; V600GR-ACTIV 600GR; SMART-ACTIV550

REF.361A*

LÂMINA SEPARADOR PÁ STD

Comp. 3920684

3045, 3050,3052, 3100,3125, 3140, 3200, 4380, 4390, 4420, 4460, 8390 ...

REF.361B*

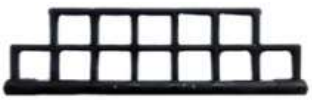

LÂMINA SEPARADOR PALETTE GR

Comp. 3929339

3300, 3400, 4050, 4056, 4560, 8590

☆ REF.382A NOVO !

PLATAFORMA 2mm

Comp. -

3050,3100,3200,4240,4320,4340,4360,4380,4420,4460,4560,8290,8350,8270,8370,8390,8470,8490,8590, Optimum 530, Optimum 550, Optimum 570, Optimum 590, Optimum 750, Optimum 890, MAV 8030, MAV 8050, MAV 8091

☆ REF.382B NOVO !

PLATAFORMA 4mm

Comp. -

3050,3100,3200,4240,4320,4340,4360,4380,4420,4460,4560,8290,8350,8270,8370,8390,8470,8490,8590, Optimum 530, Optimum 550, Optimum 570, Optimum 590, Optimum 750, Optimum 890, MAV 8030, MAV 8050, MAV 8092

Todas as marcas comerciais pertencem aos seus respectivos proprietários e seu uso é apenas para fins informativos.

Verifique a Ref. Antes. WWW.EDUARDOREPUESTOSAGRICOLAS.COM *Verifique a Ref. Antes.*

Origem *Burgos*
Destino *o mundo*

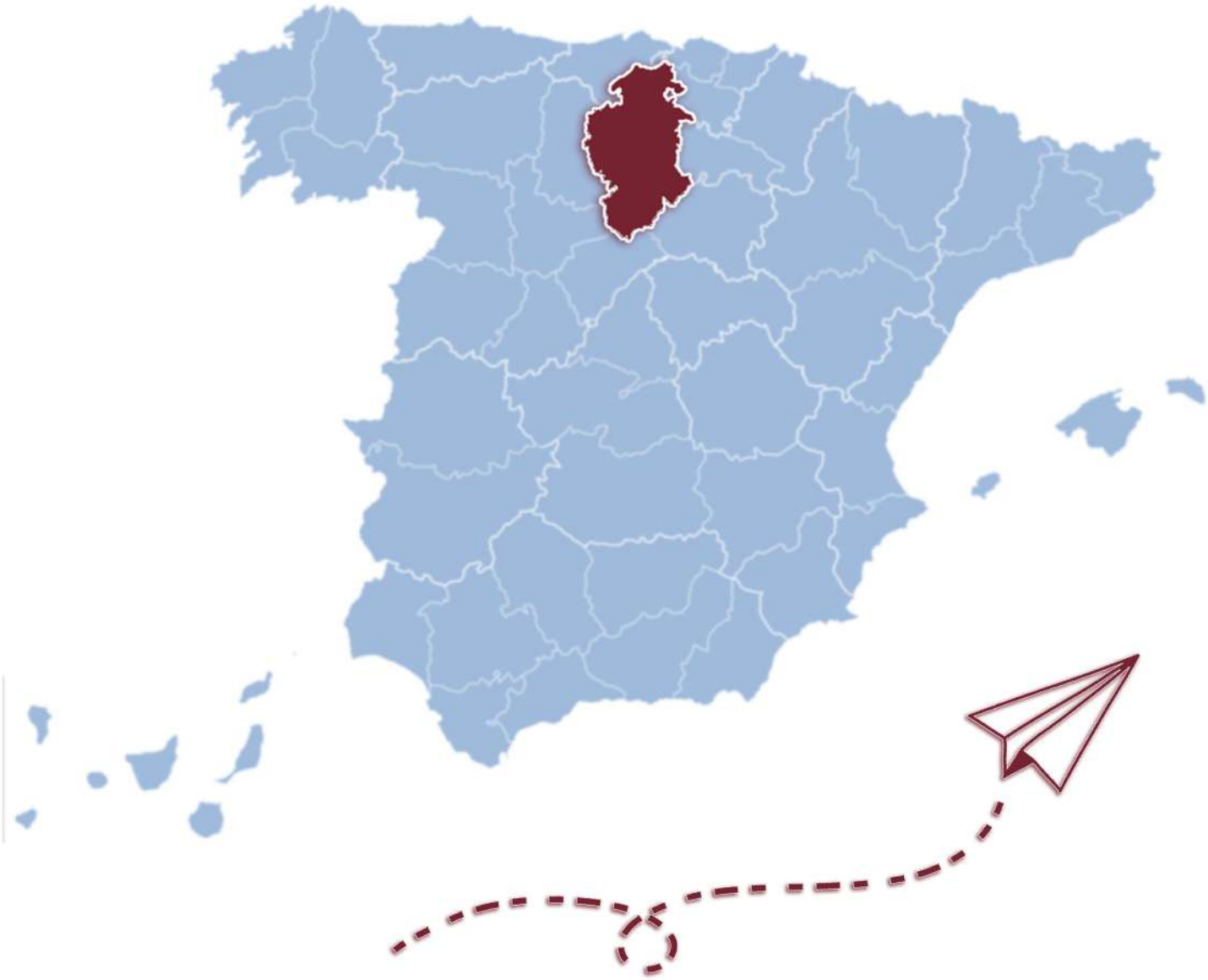

É totalmente proibida a reprodução total ou parcial deste catálogo, incluindo textos, desenhos e fotografias, bem como sua conservação em qualquer meio ou sua transmissão sob qualquer forma ou por qualquer meio digital, mecânico, fotocópia, digitalização ou qualquer outro meio sem autorização prévia e por escrito.

As imagens utilizadas são meramente ilustrativas e podem ser diferentes dos modelos originais.

Todos os nomes de produtos, logotipos e marcas são propriedade de seus respectivos proprietários. Todos os nomes de empresas, produtos e serviços usados neste site são usados apenas para fins de identificação. O uso desses nomes, logotipos e marcas não implica endosso de qualquer espécie.

As informações neste catálogo podem ser alteradas sem aviso prévio.

Copyright © 2022

SPAIN | PORTUGAL | FRANCE | ITALY | SWITZERLAND | GERMANY | HUNGARY | THE NETHERLANDS | LATVIA | FINLAND | MOROCCO | EGYPT | JORDAN | U.S.A | MEXICO | CHILE | ARGENTINA | URUGUAY | SOUTH AFRICA | AUSTRALIA | NEW ZEALAND

EDUARDO REPUESTOS AGRÍCOLAS

MOLDES Y RESINAS, S.L.

Calle López Bravo 24-26, nave 26
Polígono Villalonquéjar
09001 Burgos, España

Tel. +34 606 39 41 29

ot@eduardorepuestosagricolas.com

www.eduardorepuestosagricolas.com