WWW.EDUARDOREPUESTOSAGRICOLAS.COM

EDUARDO

CATALOG 2025

Compatible spare parts for grape harvesters

NEW HOLLAND | GREGOIRE | PELLENC

INDEX

EDUARDO REPUESTOS AGRÍCOLAS 3

NEW HOLLAND (original & compatible) 6

GRÉGOIRE (original & compatible) 28

PELLENC (original & compatible) 38

AN ANSWER TO A NEED

Our compatible spare parts represent a **perfectly valid alternative to the originals**. We offer reliable products, individually tested in our technical laboratory, and at very competitive prices. Our team of specialized technicians studies the **changing needs of the sector to adapt them at all times**, thus improving their performance thanks to the feedback they offer us.

We offer an **extensive range of products and services**. We are manufacturers, as white label producers, and for other companies and distributors.

Since our beginnings, **the main objective has been to obtain the same parts**, from the injection of plastic parts, to the realization of conveyor belts, machining, turning, assembly and, a long etcetera of processes.

PERFECT LOCATION

Eduardo Repuestos Agrícolas, belonging to the *Moldes y Resinas S.L.* group, began its activity in 2012 at the hands of Eduardo Royo and María Rosa Lázaro, who took the objective of s**olving the discovered needs of the Spanish wine market**.

One of the factors that has favored its rapid growth is its location: Burgos, **a strategic geographical point** halfway between the Ribera del Duero and La Rioja, wine-making references. This translates into a **constant renewal and improvement in the techniques of creation, manufacture and production** of the components offered, as well as a revolutionary look at the latest techniques in the world of the vine and the olive tree.

A TEAM AT YOUR DISPOSAL

Eduardo Repuestos Agrícolas is made up of a **dynamic and decisive team**, whose main objective is customer satisfaction.

From the company's technical office, new parts and products are tested and developed to adapt to the changing pace of the sector. Along the same lines, it offers a **personalized solution design service** to meet the specific needs of individual clients.

The **wide commercial and distribution network** acquired during these years allows, from personal advice and resolution of any doubt, to the receipt of the merchandise, a process in which the different members of the team intervene.

RESPONSIBILITY AND COMMITMENT

The group seeks to achieve the **highest quality, maximum range, and maximum service**, in the shortest possible time.

Therefore, **speed, punctuality and commitment** are the pillars that sustain this company, and which are considered essential and basic when managing and shipping products on a daily basis.

The philosophy of the workers that make up *Eduardo Repuestos Agrícolas* resides in providing consumers with **greater comfort** when making their purchases, satisfying their product needs by increasing specialization, and adjusting the price. In short, what we want is to **enhance customer proximity and loyalty**.

NEW HOLLAND-BRAUD COMPATIBLE

EDUARDO

REF.201C

RIGHT BUCKET HIGH CAPACITY

Comp. 944029647

8030L, 9030L, 9040L, 9050L H, 9050L L, 9050L SH, 9060L, 9060L GE, 9060L H, 9060L SH, 9070L H, 9070L L, 9070L L T5, 9070L SH, 9080L, 9080L GE, 9080L H, 9080L SH, 9090L, 9090L GE, 9090L H, 9090L H T4, 9090L H T5, 9090L SH, 9090L SH T4, 9090L SH T5, 9090L T3, 9090X, 9090X GE, 9090X GE T3, 9090X GE T4, 9090X GE T5, 9090X H, 9090X H H, 9090X H T4, 9090X O, 9090X O GE, 9090X O GE T3, 9090X O GE T4, 9090X O GE T5, 9090X O H T4, 9090X O T3, 9090X O T4, 9090X O T5, 9090X OP, 9090X OP GE, 9090X T3, 9090X T4, 9090X T5, , LM625, , SB56, SB58, SB60, SB62, SB64, SB65, VL600, VL6040, VL6050, VL6060, VL6070, VL6080, VL6090, VL610, VL620, VL630, VL640, VL660, VM4090, VX680, VX7090

REF.202C

LEFT BUCKET HIGH CAPACITY

Comp. 944029648

8030L, 9030L, 9040L, 9050L H, 9050L L, 9050L SH, 9060L, 9060L GE, 9060L H, 9060L SH, 9070L H, 9070L L, 9070L L T5, 9070L SH, 9080L, 9080L GE, 9080L H, 9080L SH, 9090L, 9090L GE, 9090L H, 9090L H T4, 9090L H T5, 9090L SH, 9090L SH T4, 9090L SH T5, 9090L T3, 9090X, 9090X GE, 9090X GE T3, 9090X GE T4, 9090X GE T5, 9090X H, 9090X H H, 9090X H T4, 9090X O, 9090X O GE, 9090X O GE T3, 9090X O GE T4, 9090X O GE T5, 9090X O H T4, 9090X O T3, 9090X O T4, 9090X O T5, 9090X OP, 9090X OP GE, 9090X T3, 9090X T4, 9090X T5, , LM625, , SB36, SB56, SB58, SB60, SB62, SB64, SB65, VL600, VL6040, VL6050, VL6060, VL6070, VL6080, VL6090, VL610, VL620, VL630, VL640, VL660, VM4090, VX680, VX7090

REF.222C

KIT OF 10 HIGH CAPACITY RIGHT BUCKETS, ALREADY SET UP

Comp. 944024789

8030L, 9030L, 9040L, 9050L H, 9050L L, 9050L SH, 9060L, 9060L H, 9070L H, 9070L L, 9070L L T5, 9070L SH, 9080L, 9080L H, 9090L, 9090L H, 9090L H T4, 9090L H T5, 9090L SH T4, 9090L SH T5, 9090L T3, 9090X GE T3, 9090X GE T4, 9090X GE T5, 9090X H T4, 9090X O GE T3, 9090X O GE T4, 9090X O GE T5, 9090X O H T4, 9090X O T3, 9090X O T4, 9090X O T5, 9090X T3, 9090X T4, 9090X T5, SB56, SB58, SB60, SB62, SB64, SB65, VL600, VL6040, VL6050, VL6060, VL6070, VL6080, VL6090, VL610, VL620, VL630, VL640, VL660, VX680, VX7090

REF.223C

KIT OF 10 HIGH CAPACITY LEFT BUCKETS, ALREADY SET UP

Comp. 944024790

8030L, 9030L, 9040L, 9050L H, 9050L L, 9050L SH, 9060L, 9060L H, 9070L H, 9070L L, 9070L L T5, 9070L SH, 9080L, 9080L H, 9090L, 9090L H, 9090L H T4, 9090L H T5, 9090L SH T4, 9090L SH T5, 9090L T3, 9090X GE T3, 9090X GE T4, 9090X GE T5, 9090X H T4, 9090X O GE T3, 9090X O GE T4, 9090X O GE T5, 9090X O H T4, 9090X O T3, 9090X O T4, 9090X O T5, 9090X T3, 9090X T4, 9090X T5, SB36, SB56, SB58, SB60, SB62, SB64, SB65, VL600, VL6040, VL6050, VL6060, VL6070, VL6080, VL6090, VL610, VL620, VL630, VL640, VL660, VX680, VX7090

REF.203C

RIGHT BUCKET WITH LONG BEAK

Comp. 944023785

7030L, SB33, SB35, SB36, SB53, SB55, SB56, SB58, SB60, SB62, SB64, SB65, VL5060, VL5080, VL5090, VL530, VL540, VL550, VL570, VM3080, VM3080 AL, VM3090, VN2090

REF.204C

LEFT BUCKET WITH LONG BEAK

Comp. 944023786

7030L, SB33, SB35, SB36, SB53, SB55, SB56, SB58, SB60, SB62, SB64, SB65, VL5060, VL5080, VL5090, VL530, VL540, VL550, VL570, VM3080, VM3080 AL, VM3090, VN2090

REF.224C

KIT OF 10 RIGHT BUCKETS, LONG BEAK, ALREADY SET UP

Comp. 87629861

7030L, SB53, SB55, SB56, SB58, SB60, SB62, SB64, VL5060, VL5080, VL5090, VL530, VL540, VL550, VL570

REF.225C

KIT OF 10 LEFT BUCKETS, LONG BEAK, ALREADY SET UP

Comp. 87629862

7030L, SB53, SB55, SB56, SB58, SB60, SB62, SB64, VL5060, VL5080, VL5090, VL530, VL540, VL550, VL570

REF.735A

RIGHT BUCKET WITH THREE HOLES

Comp. 913350503

1620, 1620S, 2720, 7030M, 7030M H, 9040M, 9070M, 9080N H, 9080N L, SB33, SB35, SB36, SB53, SB55, SB56, SB58, SB60, SB62, SB64, VL5060, VL5080, VL5090, VL6040, VL6050, VL6060, VL6070, VL6080, VL6090, VM3080, VM3080 AL, VM3090, VM340, VM370, VM4090, VM460, VN2080, VN2090, VN240, VN260, VN300

REF.735B

LEFT BUCKET WITH THREE HOLES

Comp. 913350502

1620, 1620S, 2720, 7030M, 7030M H, 9040M, 9070M, 9080N H, 9080N L, SB33, SB35, SB36, SB53, SB55, SB56, SB58, SB60, SB62, SB64, VL5060, VL5080, VL5090, VL6040, VL6050, VL6060, VL6070, VL6080, VL6090, VM3080, VM3080 AL, VM3090, VM340, VM370, VM4090, VM460, VN2080, VN2090, VN240, VN260, VN300

REF.735C

KIT 10 RIGHT BUCKET WITH 3 HOLES

Comp. 87629859

1620, 1620S, 2720, 7030M, 7030M H, 9040M, 9070M, 9080N H, 9080N L, SB33, SB35, SB36, VM3080, VM3090, VM340, VM370, VM4090, VM460, VN2080, VN240, VN260, VN300

REF.735D

KIT 10 LEFT BUCKET WITH 3 HOLES

Comp. 87629860

1620, 1620S, 2720, 7030M, 7030M H, 9040M, 9070M, 9080N H, 9080N L, SB33, SB35, SB36, VM3080, VM3090, VM340, VM370, VM4090, VM460, VN2080, VN240, VN260, VN300

REF.712A

MOUNTED HIGHTS BUCKETS 62+62 UNITS. WHITE SLIDING

Comp. -

8030L, 9030L, 9040L, 9050L H, 9050L L, 9050L SH, 9060L, 9060L GE, 9060L H, 9060L SH, 9070L H, 9070L L, 9070L L T5, 9070L SH, 9080L, 9080L GE, 9080L H, 9080L SH, 9090L, 9090L GE, 9090L H, 9090L H T4, 9090L H T5, 9090L SH, 9090L SH T4, 9090L SH T5, 9090L T3, 9090X, 9090X GE, 9090X GE T3, 9090X GE T4, 9090X GE T5, 9090X H, 9090X H H, 9090X H T4, 9090X O, 9090X O GE, 9090X O GE T3, 9090X O GE T4, 9090X O GE T5, 9090X O H T4, 9090X O T3, 9090X O T4, 9090X O T5, 9090X OP, 9090X OP GE, 9090X T3, 9090X T4, 9090X T5, , LM625, , SB56, SB58, SB60, SB62, SB64, SB65, VL600, VL6040, VL6050, VL6060, VL6070, VL6080, VL6090, VL610, VL620, VL630, VL640, VL660, VM4090, VX680, VX7090

REF.712F

MOUNTED HIGHTS BUCKETS 62+62 UNITS BLACK SLIDING

Comp. -

8030L, 9030L, 9040L, 9050L H, 9050L L, 9050L SH, 9060L, 9060L GE, 9060L H, 9060L SH, 9070L H, 9070L L, 9070L L T5, 9070L SH, 9080L, 9080L GE, 9080L H, 9080L SH, 9090L, 9090L GE, 9090L H, 9090L H T4, 9090L H T5, 9090L SH, 9090L SH T4, 9090L SH T5, 9090L T3, 9090X, 9090X GE, 9090X GE T3, 9090X GE T4, 9090X GE T5, 9090X H, 9090X H H, 9090X H T4, 9090X O, 9090X O GE, 9090X O GE T3, 9090X O GE T4, 9090X O GE T5, 9090X O H T4, 9090X O T3, 9090X O T4, 9090X O T5, 9090X OP, 9090X OP GE, 9090X T3, 9090X T4, 9090X T5, , LM625, , SB56, SB58, SB60, SB62, SB64, SB65, VL600, VL6040, VL6050, VL6060, VL6070, VL6080, VL6090, VL610, VL620, VL630, VL640, VL660, VM4090, VX680, VX7090

REF.712G

MOUNTED HIGHTS BUCKETS 62+62 UNITS BLUE SLIDNG

Comp. -

8030L, 9030L, 9040L, 9050L H, 9050L L, 9050L SH, 9060L, 9060L GE, 9060L H, 9060L SH, 9070L H, 9070L L, 9070L L T5, 9070L SH, 9080L, 9080L GE, 9080L H, 9080L SH, 9090L, 9090L GE, 9090L H, 9090L H T4, 9090L H T5, 9090L SH, 9090L SH T4, 9090L SH T5, 9090L T3, 9090X, 9090X GE, 9090X GE T3, 9090X GE T4, 9090X GE T5, 9090X H, 9090X H H, 9090X H T4, 9090X O, 9090X O GE, 9090X O GE T3, 9090X O GE T4, 9090X O GE T5, 9090X O H T4, 9090X O T3, 9090X O T4, 9090X O T5, 9090X OP, 9090X OP GE, 9090X T3, 9090X T4, 9090X T5, , LM625, , SB56, SB58, SB60, SB62, SB64, SB65, VL600, VL6040, VL6050, VL6060, VL6070, VL6080, VL6090, VL610, VL620, VL630, VL640, VL660, VM4090, VX680, VX7090

REF.712C

MOUNTED HIGHTS BUCKETS 68+68 UNITS. WHITE SLIDING

Comp. -

8030L, 9030L, 9040L, 9050L H, 9050L L, 9050L SH, 9060L, 9060L GE, 9060L H, 9060L SH, 9070L H, 9070L L, 9070L L T5, 9070L SH, 9080L, 9080L GE, 9080L H, 9080L SH, 9090L, 9090L GE, 9090L H, 9090L H T4, 9090L H T5, 9090L SH, 9090L SH T4, 9090L SH T5, 9090L T3, 9090X, 9090X GE, 9090X GE T3, 9090X GE T4, 9090X GE T5, 9090X H, 9090X H H, 9090X H T4, 9090X O, 9090X O GE, 9090X O GE T3, 9090X O GE T4, 9090X O GE T5, 9090X O H T4, 9090X O T3, 9090X O T4, 9090X O T5, 9090X OP, 9090X OP GE, 9090X T3, 9090X T4, 9090X T5, , LM625, , SB56, SB58, SB60, SB62, SB64, SB65, VL600, VL6040, VL6050, VL6060, VL6070, VL6080, VL6090, VL610, VL620, VL630, VL640, VL660, VM4090, VX680, VX7090

REF.712J

MOUNTED HIGHTS BUCKETS 68+68 UNITS BLACK SLIDING

Comp. -

8030L, 9030L, 9040L, 9050L H, 9050L L, 9050L SH, 9060L, 9060L GE, 9060L H, 9060L SH, 9070L H, 9070L L, 9070L L T5, 9070L SH, 9080L, 9080L GE, 9080L H, 9080L SH, 9090L, 9090L GE, 9090L H, 9090L H T4, 9090L H T5, 9090L SH, 9090L SH T4, 9090L SH T5, 9090L T3, 9090X, 9090X GE, 9090X GE T3, 9090X GE T4, 9090X GE T5, 9090X H, 9090X H H, 9090X H T4, 9090X O, 9090X O GE, 9090X O GE T3, 9090X O GE T4, 9090X O GE T5, 9090X O H T4, 9090X O T3, 9090X O T4, 9090X O T5, 9090X OP, 9090X OP GE, 9090X T3, 9090X T4, 9090X T5, , LM625, , SB56, SB58, SB60, SB62, SB64, SB65, VL600, VL6040, VL6050, VL6060, VL6070, VL6080, VL6090, VL610, VL620, VL630, VL640, VL660, VM4090, VX680, VX7090

REF.712K

MOUNTED HIGHTS BUCKETS 68+68 UNITS BLUE SLIDNG

Comp. -

8030L, 9030L, 9040L, 9050L H, 9050L L, 9050L SH, 9060L, 9060L GE, 9060L H, 9060L SH, 9070L H, 9070L L, 9070L L T5, 9070L SH, 9080L, 9080L GE, 9080L H, 9080L SH, 9090L, 9090L GE, 9090L H, 9090L H T4, 9090L H T5, 9090L SH, 9090L SH T4, 9090L SH T5, 9090L T3, 9090X, 9090X GE, 9090X GE T3, 9090X GE T4, 9090X GE T5, 9090X H, 9090X H H, 9090X H T4, 9090X O, 9090X O GE, 9090X O GE T3, 9090X O GE T4, 9090X O GE T5, 9090X O H T4, 9090X O T3, 9090X O T4, 9090X O T5, 9090X OP, 9090X OP GE, 9090X T3, 9090X T4, 9090X T5, , LM625, , SB56, SB58, SB60, SB62, SB64, SB65, VL600, VL6040, VL6050, VL6060, VL6070, VL6080, VL6090, VL610, VL620, VL630, VL640, VL660, VM4090, VX680, VX7090

REF.712B

MOUNTED SB BUCKETS 62+62 UNITS WHITE SLIDING

Comp. -

7030L, SB33, SB35, SB36, SB53, SB55, SB56, SB58, SB60, SB62, SB64, SB65, VL5060, VL5080, VL5090, VL530, VL540, VL550, VL570, VM3080, VM3080 AL, VM3090, VN2090

REF.712H

MOUNTED SB BUCKETS 62+62 UNITS BLACK SLIDING

Comp. -

7030L, SB33, SB35, SB36, SB53, SB55, SB56, SB58, SB60, SB62, SB64, SB65, VL5060, VL5080, VL5090, VL530, VL540, VL550, VL570, VM3080, VM3080 AL, VM3090, VN2090

VAT not included

Free EU transport on orders 600€

All trademarks belong to their respective owners and their use is for informational purposes only.

WWW.EDUARDOREPUESTOSAGRICOLAS.COM

Check Ref. Before.

NEW HOLLAND-BRAUD COMPATIBLE

EDUARDO

REF.712D

MOUNTED SB BUCKETS 55+55 UNITS WHITE SLIDING

Comp. -

7030L, SB33, SB35, SB36, SB53, SB55, SB56, SB58, SB60, SB62, SB64, SB65, VL5060, VL5080, VL5090, VL530, VL540, VL550, VL570, VM3080, VM3080 AL, VM3090, VN2090

REF.712L

MOUNTED SB BUCKETS 55+55 UNITS BLACK SLIDING

Comp. -

7030L, SB33, SB35, SB36, SB53, SB55, SB56, SB58, SB60, SB62, SB64, SB65, VL5060, VL5080, VL5090, VL530, VL540, VL550, VL570, VM3080, VM3080 AL, VM3090, VN2090

REF.712E

MOUNTED LITTES BUCKETS 55+55 UNITS , WHITE SLIDING

Comp. -

1620, 1620S, 2720, 7030M, 7030M H, 9040M, 9070M, 9080N H, 9080N L, SB33, SB35, SB36, SB53, SB55, SB56, SB58, SB60, SB62, SB64, VL5060, VL5080, VL5090, VL6040, VL6050, VL6060, VL6070, VL6080, VL6090, VM3080, VM3080 AL, VM3090, VM340, VM370, VM4090, VM460, VN2080, VN2090, VN240, VN260, VN300

REF.205B

WHITE SLIDING PAD FOR BUCKETS

Comp. 944028054,944005832

1214, 1620, 1620S, 2414, 2420, 2514, 2520, 2614, 2620, 2714, 2720, 9040L, 9040M, 9060L, 9060L H, 9080L, 9080L H, 9090L, 9090L H, 9090X O, 9090X O GE, 9090X O GE T3, 9090X O GE T4, 9090X O GE T5, 9090X O H T4, 9090X O T3, 9090X O T4, 9090X O T5, 9090X OP, 9090X OP GE, , SB33, SB35, SB36, SB52, SB53, SB54, SB55, SB56, SB58, SB60, SB62, SB64, SB65, VL5060, VL5080, VL5090, VL530, VL540, VL550, VL570, VL600, VL6040, VL6050, VL6060, VL6070, VL6080, VL6090, VL610, VL620, VL630, VL640, VL660, VM3080, VM3080 AL, VM3090, VM340, VM370, VM4090, VM460, VN2080, VN2090, VN240, VN260, VN300, VX680, VX7090

REF.206B

BLACK SLIDING PAD FOR BUCKETS

Comp. 84255554

7030L, 9030L, 9040L, 9040M, 9050L H, 9050L L, 9060L, 9060L GE, 9060L H, 9060L SH, 9070L H, 9070L L, 9070L L T5, 9070M, 9080L, 9080L GE, 9080L H, 9080L SH, 9090L, 9090L GE, 9090L H, 9090L H T4, 9090L H T5, 9090L SH, 9090L T3, 9090X, 9090X GE, 9090X H, 9090X H H, 9090X OP, 9090X OP GE, SB33, SB35, SB36, SB53, SB55, SB56, SB58, SB60, SB62, SB64, VL5060, VL5080, VL5090, VL530, VL540, VL550, VL570, VL600, VL6040, VL6050, VL6060, VL6070, VL6080, VL6090, VL610, VL620, VL630, VL640, VL660, VM3080, VM3080 AL, VM3090, VM340, VM370, VM4090, VM460, VN2080, VN2090, VN240, VN260, VN300, VX680, VX7090

REF.206C

BLUE SLIDING PAD FOR BUCKETS

Comp. 84487735

7030M, 7030M H, 8030L, 9030L, 9050L H, 9050L L, 9050L SH, 9070L H, 9070L L, 9070L L T5, 9070L SH, 9070M, 9080N H, 9080N L, 9090L H T4, 9090L H T5, 9090L SH T4, 9090L SH T5, 9090L T3, 9090X GE T3, 9090X GE T4, 9090X GE T5, 9090X H T4, 9090X T3, 9090X T4, 9090X T5

REF.218B

BUCKET FIXING PLATE 1,2mm

Comp. 944023592

1214, 7030L, 8030L, 9030L, 9040L, 9050L H, 9050L L, 9050L SH, 9060L, 9060L GE, 9060L H, 9060L SH, 9070L H, 9070L L, 9070L L T5, 9070L SH, 9080L, 9080L GE, 9080L H, 9080L SH, 9090L, 9090L GE, 9090L H, 9090L H T4, 9090L H T5, 9090L SH, 9090L SH T4, 9090L SH T5, 9090L T3, 9090X, 9090X GE, 9090X GE T3, 9090X GE T4, 9090X GE T5, 9090X H, 9090X H H, 9090X H T4, 9090X O, 9090X O GE, 9090X O GE T3, 9090X O GE T4, 9090X O GE T5, 9090X O H T4, 9090X O T3, 9090X O T4, 9090X O T5, 9090X OP, 9090X OP GE, 9090X T3, 9090X T4, 9090X T5, LM625, SB36, SB52, SB53, SB54, SB55, SB56, SB58, SB60, SB62, SB64, SB65, VL5060, VL5080, VL5090, VL530, VL540, VL550, VL570, VL600, VL6040, VL6050, VL6060, VL6070, VL6080, VL6090, VL610, VL620, VL630, VL640, VL660, VM3080, VM3080 AL, VM3090, VM4090, VN2090, VX680, VX7090

★ REF.218E STRENGTHENED !

PLASTIC CLIP BUCKET FIXING PLATE

Comp. 47844511

7030L, 8030L, 9030L, 9050L H, 9050L L, 9050L SH, 9070L H, 9070L L, 9070L L T5, 9070L SH, 9090L H T4, 9090L H T5, 9090L SH T4, 9090L SH T5, 9090L T3, 9090X GE T3, 9090X GE T4, 9090X GE T5, 9090X H T4, 9090X O GE T3, 9090X O GE T4, 9090X O GE T5, 9090X O H T4, 9090X O T3, 9090X O T4, 9090X O T5, 9090X T3, 9090X T4, 9090X T5,

REF.219D

STAINLESS STEEL RETAINER COLLAR FOR BUCKET SLIDING PAD Zn

Comp. 913126098

1214, 1620, 1620S, 2414, 2420, 2514, 2520, 2614, 2620, 2714, 2720, 7030L, 7030M, 7030M H, 8030L, 9030L, 9040L, 9040M, 9050L H, 9050L L, 9050L SH, 9060L, 9060L GE, 9060L H, 9060L SH, 9070L H, 9070L L, 9070L L T5, 9070L SH, 9070M, 9080L, 9080L GE, 9080L H, 9080L SH, 9080N H, 9080N L, 9090L, 9090L GE, 9090L H, 9090L H T4, 9090L H T5, 9090L SH, 9090L SH T4, 9090L SH T5, 9090L T3, 9090X, 9090X GE, 9090X GE T3, 9090X GE T4, 9090X GE T5, 9090X H, 9090X H H, 9090X H T4, 9090X O, 9090X O GE, 9090X O GE T3, 9090X O GE T4, 9090X O GE T5, 9090X O H T4, 9090X O T3, 9090X O T4, 9090X O T5, 9090X OP, 9090X OP GE, 9090X T3, 9090X T4, 9090X T5, SB33, SB35, SB36, SB52, SB53, SB54, SB55, SB56, SB58, SB60, SB62, SB64, SB65, VL5060, VL5080, VL5090, VL530, VL540, VL550, VL570, VL600, VL6040, VL6050, VL6060, VL6070, VL6080, VL6090, VL610, VL620, VL630, VL640, VL660, VM3080, VM3080 AL, VM3090, VM340, VM370, VM4090, VM460, VN2080, VN2090, VN240, VN260, VN300, VX680, VX7090

REF.220B

STAINLESS STEEL PLATE VL

Comp. 944029158

8030L, 9030L, 9040L, 9040M, 9050L H, 9050L L, 9050L SH, 9060L, 9060L GE, 9060L H, 9060L SH, 9070L H, 9070L L, 9070L L T5, 9070L SH, 9070M, 9080L, 9080L GE, 9080L H, 9080L SH, 9090L, 9090L GE, 9090L H, 9090L H T4, 9090L H T5, 9090L SH, 9090L SH T4, 9090L SH T5, 9090L T3, 9090X, 9090X GE, 9090X GE T3, 9090X GE T4, 9090X GE T5, 9090X H, 9090X H H, 9090X H T4, 9090X O, 9090X O GE, 9090X O GE T3, 9090X O GE T4, 9090X O GE T5, 9090X O H T4, 9090X O T3, 9090X O T4, 9090X O T5, 9090X OP, 9090X OP GE, 9090X T3, 9090X T4, 9090X T5, , SB33, SB35, SB52, SB53, SB54, SB55, SB64, SB65, VL5060, VL5080, VL5090, VL530, VL540, VL550, VL570, VL600, VL6040, VL6050, VL6060, VL6070, VL6080, VL6090, VL610, VL620, VL630, VL640, VL660, VM3080, VM3080 AL, VM3090, VM340, VM370, VM4090, VM460, VN2080, VN240, VN260, VN300, VX680, VX7090

REF.220D

STAINLESS STEEL PLATE SB

Comp. 944011361

2720, 7030L, SB33, SB35, SB36, SB52, SB53, SB54, SB55, SB56, SB58, SB60, SB62, SB64, SB65, VL5060, VL5080, VL5090, VL530, VL540, VL550, VL570, VM3080, VM3080 AL, VM3090, VM4090, VM460, VN2090, VN240

REF.220E

INOX SCRAPER RIGHT 4mm

Comp. 84184935

8030L, 9030L, 9040L, 9050L H, 9050L L, 9050L SH, 9060L, 9060L GE, 9060L H, 9060L SH, 9070L H, 9070L L, 9070L L T5, 9070L SH, 9080L, 9080L GE, 9080L H, 9080L SH, 9090L, 9090L GE, 9090L H, 9090L H T4, 9090L H T5, 9090L SH, 9090L SH T4, 9090L SH T5, 9090L T3, 9090X, 9090X GE, 9090X GE T3, 9090X GE T4, 9090X GE T5, 9090X H, 9090X H H, 9090X H T4, 9090X O, 9090X O GE, 9090X O GE T3, 9090X O GE T4, 9090X O GE T5, 9090X O H T4, 9090X O T3, 9090X O T4, 9090X O T5, 9090X OP, 9090X OP GE, 9090X T3, 9090X T4, 9090X T5, VX7090

REF.220F

INOX SCRAPER LEFT 4mm

Comp. 84184934

8030L, 9030L, 9040L, 9050L H, 9050L L, 9050L SH, 9060L, 9060L GE, 9060L H, 9060L SH, 9070L H, 9070L L, 9070L L T5, 9070L SH, 9080L, 9080L GE, 9080L H, 9080L SH, 9090L, 9090L GE, 9090L H, 9090L H T4, 9090L H T5, 9090L SH, 9090L SH T4, 9090L SH T5, 9090L T3, 9090X, 9090X GE, 9090X GE T3, 9090X GE T4, 9090X GE T5, 9090X H, 9090X H H, 9090X H T4, 9090X O, 9090X O GE, 9090X O GE T3, 9090X O GE T4, 9090X O GE T5, 9090X O H T4, 9090X O T3, 9090X O T4, 9090X O T5, 9090X OP, 9090X OP GE, 9090X T3, 9090X T4, 9090X T5, VX7090

REF.221B

STAINLESS STEEL COVER PLATE 2mm

Comp. 944023349,913126

8030L, 9030L, 9040L, 9050L H, 9050L L, 9050L SH, 9060L, 9060L GE, 9060L H, 9060L SH, 9070L H, 9070L L, 9070L L T5, 9070L SH, 9080L, 9080L GE, 9080L H, 9080L SH, 9090L, 9090L GE, 9090L H, 9090L H T4, 9090L H T5, 9090L SH, 9090L SH T4, 9090L SH T5, 9090L T3, 9090X, 9090X GE, 9090X GE T3, 9090X GE T4, 9090X GE T5, 9090X H, 9090X H H, 9090X H T4, 9090X O, 9090X O GE, 9090X O GE T3, 9090X O GE T4, 9090X O GE T5, 9090X O H T4, 9090X O T3, 9090X O T4, 9090X O T5, 9090X OP, 9090X OP GE, 9090X T3, 9090X T4, 9090X T5, SB65, VL600, VL6040, VL6050, VL6060, VL6070, VL6080, VL6090, VL610, VL620, VL630, VL640, VL660, VM4090, VX680, VX7090

REF.737A

BUCKET FIXING PLATE 3 HOLES

Comp. 944003810

SB60 ,SB62 ,SB64 ,VL5060 ,VL5080 ,VL5090 ,VL6040 ,VL6050 ,VL6060 ,VL6080 ,VL6090 ,VM3080 AL ,VM3080 ,VM3090 ,VM340 ,VM370 ,VM4090 ,VM460 ,VN2080 ,VN2090 ,VN260 ,7030M ,9070M ,9040M ,9080N H ,9080N H ,9080N L ,1620,1620S ,VL6070 ,VN240 ,VN300 ,2720,SB33 ,SB35 ,SB36 ,SB56 ,SB58 ,7030M H

REF.737B

STAINLESS STEEL PLATE BUCKET 3 HOLES

Comp. 84287465

7030M, 7030M H, 9070M, 9080N H, 9080N L, VN2080, VN2090

REF.737C

STAINLESS STEEL COVER PLATE 2 HOLES

Comp. 913126192

1214, 1620, 1620S, 2414, 2420, 2514, 2520, 2614, 2620, 2714, 2720, 7030L, 7030M, 7030M H, 9040M, 9070M, 9080N H, 9080N L, SB33, SB35, SB36, SB52, SB53, SB54, SB55, SB56, SB58, SB60, SB62, SB64, VL5060, VL5080, VL5090, VL530, VL540, VL550, VL570, VL6040, VL6050, VL6060, VL6070, VL6080, VL6090, VM3080, VM3080 AL, VM3090, VM340, VM370, VM4090, VM460, VN2080, VN2090, VN240, VN260, VN300

REF.229C

CHAIN FOR BUCKETS 267 LABELS(11,6 meters)(67 BUCKETS)

Comp. 944032962

9030L, 9040L, 9040M, 9050L H, 9050L L, 9050L SH, 9060L, 9060L H, 9060L SH, 9070L H, 9070L L, 9070L L T5, 9070M, 9080L, 9080L H, 9080L SH, 9090L, 9090L H, 9090L H T4, 9090L H T5, 9090L SH, 9090L SH T4, 9090L T3, 9090X, 9090X GE, 9090X GE T4, 9090X H, 9090X H H, 9090X T4, VL600, VL6040, VL6050, VL6060, VL6070, VL6080, VL6090, VL610, VL620, VL630, VL640, VL660, VX680, VX7090

REF.229D

CHAIN FOR BUCKETS 247 LABELS (10,7M)(62 BUCKETS)

Comp. 944031392

9040L, 9040M, 9060L, 9060L GE, 9060L H, 9060L SH, 9080L, 9080L GE, 9080L H, 9080L SH, 9090L, SB36, SB56, SB58, SB60, SB62, SB64, VL600, VL6040, VL6050, VL6060, VL6070, VL6080, VL6090, VL610, VL620, VL630, VL640, VL660, VM4090

REF.229F

CHAIN -LABELS (100 meters)

Comp. -

9090X O, 9090X O GE, 9090X O GE T3, 9090X O GE T4, 9090X O GE T5, 9090X O H T4, 9090X O T3, 9090X O T4, 9090X O T5, 9090X OP, 9090X OP GE, VX7090

Check Ref. Before.

All trademarks belong to their respective owners and their use is for informational purposes only.

WWW.EDUARDOREPUESTOSAGRICOLAS.COM

VAT not included

Free EU transport on orders 600€

NEW HOLLAND-BRAUD COMPATIBLE

EDUARDO

REF.229G

CHAIN FOR BUCKETS 3 LABELS

Comp. 913505083

9090X O, 9090X O GE, 9090X O GE T3, 9090X O GE T4, 9090X O GE T5, 9090X O H T4, 9090X O T3, 9090X O T4, 9090X O T5, 9090X OP, 9090X OP GE, VX7090

REF.229H

CHAIN FOR BUCKETS 287 LABELS (11,92 m.) (72 BUCKETS) HEAD OLIVE

Comp. -

9090X O, 9090X O GE, 9090X O GE T3, 9090X O GE T4, 9090X O GE T5, 9090X O H T4, 9090X O T3, 9090X O T4, 9090X O T5, 9090X OP, 9090X OP GE, VX7090

REF.230B

BUCKET BLIND NUT INOX

Comp. 920008124

1620, 1620S, 2414, 2420, 2514, 2520, 2614, 2620, 2714, 2720, 7030L, 7030M, 7030M H, 8030L, 9030L, 9040L, 9040M, 9050L H, 9050L L, 9050L SH, 9060L, 9060L GE, 9060L H, 9060L SH, 9070L H, 9070L L, 9070L L T5, 9070L SH, 9070M, 9070N H T5, 9070N L, 9070N L T5, 9070 , 9080L, 9080L GE, 9080L H, 9080L SH, 9080N H, 9080N L, 9090L, 9090L GE, 9090L H, 9090L H T4, 9090L H T5, 9090L SH, 9090L SH T4, 9090L SH T5, 9090L T3, 9090X, 9090X GE, 9090X GE T3, 9090X GE T4, 9090X GE T5, 9090X H, 9090X H H, 9090X H T4, 9090X O, 9090X O GE, 9090X O GE T3, 9090X O GE T4, 9090X O GE T5, 9090X O H T4, 9090X O T3, 9090X O T4, 9090X O T5, 9090X OP, 9090X OP GE, 9090X T3, 9090X T4, 9090X T5, 5833, 5835, 5836, 5852, 5853, 5854, 5855, 5856, 5858, 5860, 5862, 5864, 5865, VL5060, VL5080, VL5090, VL530, VL540, VL550, VL570, VL600, VL6040, VL6050, VL6060, VL6070, VL6080, VL6090, VL610, VL620, VL630, VL640, VL660, VM3080, VM3080 AL, VM3090, VM340, VM370, VM4090, VM460, VN2080, VN2090, VN240, VN260, VN300, VX680, VX7090

REF.231A

CHAIN LINK (complet)

Comp. 48147387(920008122+2pz913126220+86625003)

1214, 1620, 1620S, 2414, 2420, 2514, 2520, 2614, 2620, 2714, 2720, 7030L, 7030M, 7030M H, 8030L, 9030L, 9040L, 9040M, 9050L H, 9050L L, 9050L SH, 9060L, 9060L GE, 9060L H, 9060L SH, 9070L H, 9070L L, 9070L L T5, 9070L SH, 9070M, 9070N L, 9070N L T5, 9070 , 9080L, 9080L GE, 9080L H, 9080L SH, 9080N H, 9080N L, 9090L, 9090L GE, 9090L H, 9090L H T4, 9090L H T5, 9090L SH, 9090L SH T4, 9090L SH T5, 9090L T3, 9090X, 9090X GE, 9090X GE T3, 9090X GE T4, 9090X GE T5, 9090X H, 9090X H H, 9090X H T4, 9090X O, 9090X O GE, 9090X O GE T3, 9090X O GE T4, 9090X O GE T5, 9090X O H T4, 9090X O T3, 9090X O T4, 9090X O T5, 9090X OP, 9090X OP GE, 9090X T3, 9090X T4, 9090X T5, 5833, 5835, 5836, 5852, 5853, 5854, 5855, 5856, 5858, 5860, 5862, 5864, 5865, VL5060, VL5080, VL5090, VL530, VL540, VL550, VL570, VL600, VL6040, VL6050, VL6060, VL6070, VL6080, VL6090, VL610, VL620, VL630, VL640, VL660, VM3080, VM3080 AL, VM3090, VM340, VM370, VM4090, VM460, VN2080, VN2090, VN240, VN260, VN300, VX680, VX7090

REF.215B

SHAKING ROD Ø32 MM, INNER HOLE Ø15MM/1739 MM

Comp. 944007307, 84171535,47699254

5860 ,5862 ,5864 ,5865 ,VL5060 ,VL5080 ,VL5090 ,VL6040 ,VL6050 ,VL6060 ,VL6080 ,VL6090 ,VM3080 AL , ,VM3080 ,VM3090 ,VM340 ,VM370 ,VM4090 ,VM460 ,VN2090 ,VX7090 ,VX7090,7030L ,7030M ,8030L ,9080L GE ,9080L ,9080L H ,9080L SH ,9090L ,9090L H ,9090L SH ,9050L H ,9090L H T4 ,9070L H ,9070L L ,9050L L ,9040L ,9060L GE ,9060L H ,9060L SH ,9070M ,9040M ,9090X O HEAD T4 ,9090X GE ,9090X ,9090X H ,9090X O GE ,9090X O ,9090X GE T4 ,9090X O GE T4 ,9090X T4 ,9090X O T4 ,9090X HEAD T4 ,9090X O GE T5 ,9090X GE T5 ,9090X T5 ,VL640 ,VL660 ,VX680 ,9060L ,9030L ,VL530 ,VL540 ,VL550 ,VL570 ,9090L GE ,VL600 ,VL6070 ,VL610 ,VL620 ,VL630 ,9090X O T3 ,9090X O T5 ,9090L H T5 ,9090L SH T4 ,9090X H HEAD ,9090X OP ,9090X O GE T3 ,9090X OP GE ,5833 ,5835 ,5836 ,5852 ,5853 ,5854 ,5855 ,5856 ,5858 ,9090X GE T3 ,9090X T3 ,9090L T3 ,9090L SH T5 ,7030M HEAD ,9050L SH ,9070L SH ,9070L L T5 ,9050L SH T5 ,9070M T5 ,9030L T5 ,9070L H T5 ,9070L SH T5 ,9050L H T5 ,9050L L T5 ,8030L T5 ,11.90X MULTI

REF.215E

BENT SHAKING ROD Ø25 mm S. 9000N

Comp. 47699249, 944031167, 84174661

9080N H, 9080N L, VN2080, VN240, VN260

REF.232B

FIBER BAR WITH INOX TUBE. BENT, Olive Grove (length 100 cm)

Comp. -

9090X O, 9090X O GE, 9090X O GE T3, 9090X O GE T4, 9090X O H T4, 9090X O T3, 9090X O T4, 9090X OP, 9090X OP GE, GREGOIRE 1, GREGOIRE

REF.233B

FIBER BAR WITH TUBE INOX.WITHOUT BEND, Olive Grove (length 100 cm)

Comp. 84343361

9090X O, 9090X O GE, 9090X O GE T3, 9090X O GE T4, 9090X O H T4, 9090X O T3, 9090X O T4, 9090X OP, 9090X OP GE, GREGOIRE 1, GREGOIRE

REF.755A

SHAKER 9080N

Comp. 51494407

9080N

REF.517A*

HALF FLANGE

Comp. 944025739

7030M, 7030M H, 8030L, 9040L, 9040M, 9060L, 9060L GE, 9060L H, 9060L SH, 9080L, 9080L GE, 9080L H, 9080L SH, 9090L, 9090L GE, 9090L H, 9090L SH, 9090L T3, 9090X, 9090X GE, 9090X H, 9090X H H, VL5060, VL5080, VL5090, VL550, VL570, VL6040, VL6050, VL6060, VL6070, VL6080, VL6090, VL610, VL620, VL630, VL640, VL660, VM3080, VM3080 AL, VM3090, VM370, VM4090, VM460, VN2090, VX680, VX7090

REF.518A*

HALF FLANGE

Comp. 944021280

7030M, 7030M H, 8030L, 9040L, 9040M, 9050L L, 9050L SH, 9060L, 9060L GE, 9060L H, 9060L SH, 9070L L, 9070L L T5, 9070L SH, 9070M, 9080L, 9080L GE, 9080L H, 9080L SH, 9090L, 9090L GE, 9090L H, 9090L SH, 9090L SH T4, 9090L SH T5, 9090L T3, 9090X, 9090X GE, 9090X H, 9090X H H, VL5060, VL5080, VL5090, VL550, VL570, VL6040, VL6050, VL6060, VL6070, VL6080, VL6090, VL610, VL620, VL630, VL640, VL660, VM3080, VM3080 AL, VM3090, VM370, VM4090, VM460, VN2090, VX680, VX7090

REF.519A

BUSHING Ø48 MM FOR COLUMN FLANGE

Comp. 944026268

7030M, 7030M H, 8030L, 9040L, 9040M, 9050L L, 9050L SH, 9060L, 9060L GE, 9060L H, 9060L SH, 9070L L, 9070L L T5, 9070L SH, 9070M, 9080L, 9080L GE, 9080L H, 9080L SH, 9090L, 9090L GE, 9090L H, 9090L SH, 9090L SH T4, 9090L SH T5, 9090L T3, 9090X, 9090X GE, 9090X H, 9090X H H, VL5060, VL5080, VL5090, VL550, VL570, VL6040, VL6050, VL6060, VL6070, VL6080, VL6090, VL610, VL620, VL630, VL640, VL660, VM3080, VM3080 AL, VM3090, VM370, VM4090, VM460, VN2090, VX680, VX7090

REF.519B

SCREW M14X60ZN

Comp. 944025488

7030M, 7030M H, 8030L, 9030L, 9040L, 9040M, 9050L H, 9050L L, 9050L SH, 9060L, 9060L GE, 9060L H, 9060L SH, 9070L H, 9070L L, 9070L L T5, 9070L SH, 9070M, 9080L, 9080L GE, 9080L H, 9080L SH, 9090L, 9090L GE, 9090L H, 9090L H T4, 9090L H T5, 9090L SH, 9090L SH T4, 9090L SH T5, 9090L T3, 9090X, 9090X GE, 9090X GE T3, 9090X GE T4, 9090X GE T5, 9090X H, 9090X H H, 9090X T3, 9090X T4, 9090X T5, SB65, TL58 I, VL5060, VL5080, VL5090, VL530, VL540, VL550, VL570, VL600, VL6040, VL6050, VL6060, VL6070, VL6080, VL6090, VL610, VL620, VL630, VL640, VL660, VM3080, VM3080 AL, VM3090, VM340, VM370, VM4090, VM460, VX680, VX7090

REF.519C

VIS M14X50ZN

Comp. -

1620, 1620S, 2420, 2520, 2620, 7030M, 7030M H, 8030L, 9030L, 9050L H, 9050L L, 9050L SH, 9070L H, 9070L L, 9070L L T5, 9070L SH, 9070M, 9090L H T4, 9090L H T5, 9090L SH T4, 9090L SH T5, 9090L T3, 9090X GE T3, 9090X GE T4, 9090X GE T5, 9090X T3, 9090X T4, 9090X T5, SB52, SB54, VL5060, VL5080, VL5090, VL530, VL540, VL550, VL570, VL600, VL6040, VL6050, VL6060, VL6070, VL6080, VL6090, VL610, VL620, VL630, VL640, VL660, VM3080, VM3080 AL, VM3090, VM340, VM370, VM4090, VM460, VX680, VX7090

REF.520A

STAINLESS STEEL COVER PLATE

Comp. 944025488

7030M, 7030M H, 8030L, 9040L, 9040M, 9050L L, 9050L SH, 9060L, 9060L GE, 9060L H, 9060L SH, 9070L L, 9070L L T5, 9070L SH, 9070M, 9080L, 9080L GE, 9080L H, 9080L SH, 9090L, 9090L GE, 9090L H, 9090L SH, 9090L SH T4, 9090L SH T5, 9090L T3, 9090X, 9090X GE, 9090X H, 9090X H H, VL5080, VL5090, VL550, VL570, VL6050, VL6060, VL6070, VL6080, VL6090, VL610, VL620, VL630, VL640, VL660, VM3080 AL, VM3090, VM370, VM4090, VM460, VX680, VX7090

REF.521A

COMPLETE SET (Half shell + Half shell + bushing + 2 protectors + 2 M6 screws + 2 M6 nuts + 1 M14 washer + 2 M14 screw + 2 M14 nut)

Comp.

7030M, 7030M H, 8030L, 9040L, 9040M, 9050L L, 9050L SH, 9060L, 9060L GE, 9060L H, 9060L SH, 9070L L, 9070L L T5, 9070L SH, 9070M, 9080L, 9080L GE, 9080L H, 9080L SH, 9090L, 9090L GE, 9090L H, 9090L SH, 9090L SH T4, 9090L SH T5, 9090L T3, 9090X, 9090X GE, 9090X H, 9090X H H, VL5080, VL5090, VL550, VL570, VL6050, VL6060, VL6070, VL6080, VL6090, VL610, VL620, VL630, VL640, VL660, VM3080 AL, VM3090, VM370, VM4090, VM460, VX680, VX7090,633,6

REF.546B

SUPPORT VARA FIBER KIT

Comp. 913001074

1214, 2414, 2514, 2614, 2714, 9090X GE T3, 9090X GE T4, 9090X GE T5, 9090X H, 9090X O, 9090X O GE, 9090X O GE T3, 9090X O GE T4, 9090X O H T4, 9090X O T3, 9090X O T4, 9090X OP, 9090X OP GE, 9090X T3, 9090X T4, 9090X T5, SB65, T140, TB15, VX680, VX7090

REF.207B

SHAKING ROD CONROD

Comp. 944035000, 87586176

7030L, 7030M, 7030M H, 8030L, 9030L, 9040L, 9040M, 9050L H, 9050L L, 9050L SH, 9060L, 9060L GE, 9060L H, 9060L SH, 9070L H, 9070L L, 9070L L T5, 9070L SH, 9070M, 9080L, 9080L GE, 9080L H, 9080L SH, 9090L, 9090L GE, 9090L H, 9090L H T4, 9090L H T5, 9090L SH, 9090L SH T4, 9090L SH T5, 9090L T3, 9090X, 9090X GE, 9090X GE T3, 9090X GE T4, 9090X GE T5, 9090X H, 9090X H H, 9090X H T4, 9090X O, 9090X O GE, 9090X O GE T3, 9090X O GE T4, 9090X O GE T5, 9090X O H T4, 9090X O T3, 9090X O T4, 9090X O T5, 9090X OP, 9090X OP GE, 9090X T3, 9090X T4, 9090X T5, , VL5060, VL5080, VL5090, VL530, VL540, VL550, VL570, VL600, VL6040, VL6050, VL6060, VL6070, VL6080, VL6090, VL610, VL620, VL630, VL640, VL660, VM3080, VM3080 AL, VM3090, VM340, VM370, VM4090, VM460, VX680, VX7090

REF.208B

SHAKING ROD SHAPED CONROD

Comp. 944036901, 87586178

7030L, 7030M, 7030M H, 8030L, 9030L, 9040L, 9040M, 9050L H, 9050L L, 9050L SH, 9060L, 9060L GE, 9060L H, 9060L SH, 9070L H, 9070L L, 9070L L T5, 9070L SH, 9070M, 9080L, 9080L GE, 9080L H, 9080L SH, 9090L, 9090L GE, 9090L H, 9090L H T4, 9090L H T5, 9090L SH, 9090L SH T4, 9090L SH T5, 9090L T3, 9090X, 9090X GE, 9090X GE T3, 9090X GE T4, 9090X GE T5, 9090X H, 9090X H H, 9090X H T4, 9090X T3, 9090X T4, 9090X T5, VL5060, VL5080, VL5090, VL550, VL570, VL600, VL6040, VL6050, VL6060, VL6070, VL6080, VL6090, VL610, VL620, VL630, VL640, VL660, VM3080, VM3080 AL, VM3090, VM340, VM370, VM4090, VM460, VX680, VX7090

VAT not included

Free EU transport on orders 600€

All trademarks belong to their respective owners and their use is for informational purposes only.

WWW.EDUARDOREPUESTOSAGRICOLAS.COM

Check Ref. Before.

NEW HOLLAND-BRAUD COMPATIBLE

EDUARDO

REF.209B

PLASTIC BUSHING FOR CONROD COMPONENTS

Comp. 944031036

7030L, 7030M, 7030M H, 8030L, 9030L, 9040L, 9040M, 9050L H, 9050L L, 9050L SH, 9060L, 9060L GE, 9060L H, 9060L SH, 9070L H, 9070L L, 9070L L T5, 9070L SH, 9070M, 9080L, 9080L GE, 9080L H, 9080L SH, 9090L, 9090L GE, 9090L H, 9090L H T4, 9090L H T5, 9090L SH, 9090L SH T4, 9090L SH T5, 9090L T3, 9090X, 9090X GE, 9090X GE T3, 9090X GE T4, 9090X GE T5, 9090X H, 9090X H H, 9090X H T4, 9090X O, 9090X O GE, 9090X O GE T3, 9090X O GE T4, 9090X O GE T5, 9090X O H T4, 9090X O T3, 9090X O T4, 9090X O T5, 9090X OP, 9090X OP GE, 9090X T3, 9090X T4, 9090X T5, VL5060, VL5080, VL5090, VL530, VL540, VL550, VL570, VL600, VL6040, VL6050, VL6060, VL6070, VL6080, VL6090, VL610, VL620, VL630, VL640, VL660, VM3080, VM3080 AL, VM3090, VM340, VM370, VM4090, VM460, VN2090,

REF.209C

WHASER SHAKING ROD

Comp. 944034949

7030L, 7030M, 7030M H, 8030L, 9030L, 9040L, 9040M, 9050L H, 9050L L, 9050L SH, 9060L, 9060L GE, 9060L H, 9060L SH, 9070L H, 9070L L, 9070L L T5, 9070L SH, 9070M, 9080L, 9080L GE, 9080L H, 9080L SH, 9090L, 9090L GE, 9090L H, 9090L H T4, 9090L H T5, 9090L SH, 9090L SH T4, 9090L SH T5, 9090L T3, 9090X, 9090X GE, 9090X GE T3, 9090X GE T4, 9090X GE T5, 9090X H, 9090X H H, 9090X H T4, 9090X O, 9090X O GE, 9090X O GE T3, 9090X O GE T4, 9090X O GE T5, 9090X O H T4, 9090X O T3, 9090X O T4, 9090X O T5, 9090X OP, 9090X OP GE, 9090X T3, 9090X T4, 9090X T5, VL5060, VL5080, VL5090, VL530, VL540, VL550, VL570, VL600, VL6040, VL6050, VL6060, VL6070, VL6080, VL6090, VL610, VL620, VL630, VL640, VL660, VM3080, VM3080 AL, VM3090, VM340, VM370, VM4090, VM460, VX680, VX7090

REF.209D

SLEEVE

Comp. 944035002

7030L, 7030M, 7030M H, 8030L, 9030L, 9040L, 9040M, 9050L H, 9050L L, 9050L SH, 9060L, 9060L GE, 9060L H, 9060L SH, 9070L H, 9070L L, 9070L L T5, 9070L SH, 9070M, 9080L, 9080L GE, 9080L H, 9080L SH, 9090L, 9090L GE, 9090L H, 9090L H T4, 9090L H T5, 9090L SH, 9090L SH T4, 9090L SH T5, 9090L T3, 9090X, 9090X GE, 9090X GE T3, 9090X GE T4, 9090X GE T5, 9090X H, 9090X H H, 9090X H T4, 9090X O, 9090X O GE, 9090X O GE T3, 9090X O GE T4, 9090X O GE T5, 9090X O H T4, 9090X O T3, 9090X O T4, 9090X O T5, 9090X OP, 9090X OP GE, 9090X T3, 9090X T4, 9090X T5, VL5060, VL5080, VL5090, VL530, VL540, VL550, VL570, VL600, VL6040, VL6050, VL6060, VL6070, VL6080, VL6090, VL610, VL620, VL630, VL640, VL660, VM3080, VM3080 AL, VM3090, VM340, VM370, VM4090, VM460, VX680, VX7090

REF.210B

CONROD COMPONENTS (HEAT-TREATED PIVOT)

Comp. 87639659

7030L, 7030M, 7030M H, 8030L, 9030L, 9040L, 9040M, 9050L H, 9050L L, 9050L SH, 9060L, 9060L GE, 9060L H, 9060L SH, 9070L H, 9070L L, 9070L L T5, 9070L SH, 9070M, 9080L, 9080L GE, 9080L H, 9080L SH, 9090L, 9090L GE, 9090L H, 9090L H T4, 9090L H T5, 9090L SH, 9090L SH T4, 9090L SH T5, 9090L T3, 9090X, 9090X GE, 9090X GE T3, 9090X GE T4, 9090X GE T5, 9090X H, 9090X H H, 9090X H T4, 9090X O, 9090X O GE, 9090X O GE T3, 9090X O GE T4, 9090X O GE T5, 9090X O H T4, 9090X O T3, 9090X O T4, 9090X O T5, 9090X OP, VL5090, VL530, VL540, VL550, VL570, VL600, VL6040, VL6050, VL6060, VL6070, VL6080, VL6090, VL610, VL620, VL630, VL640, VL660

REF.211B

COMPLET SHAKING ROD CONROD

Comp. -

7030L, 7030M, 7030M H, 8030L, 9030L, 9040L, 9040M, 9050L H, 9050L L, 9050L SH, 9060L, 9060L GE, 9060L H, 9060L SH, 9070L H, 9070L L, 9070L L T5, 9070L SH, 9070M, 9080L, 9080L GE, 9080L H, 9080L SH, 9090L, 9090L GE, 9090L H, 9090L H T4, 9090L H T5, 9090L SH, 9090L SH T4, 9090L SH T5, 9090L T3, 9090X, 9090X GE, 9090X GE T3, 9090X GE T4, 9090X GE T5, 9090X H, 9090X H H, 9090X H T4, 9090X O, 9090X O GE, 9090X O GE T3, 9090X O GE T4, 9090X O GE T5, 9090X O H T4, 9090X O T3, 9090X O T4, 9090X O T5, 9090X OP, 9090X OP GE, 9090X T3, 9090X T4, 9090X T5, , VL5060, VL5080, VL5090, VL530, VL540, VL550, VL570, VL600, VL6040, VL6050, VL6060, VL6070, VL6080, VL6090, VL610, VL620, VL630, VL640, VL660, VM3080, VM3080 AL, VM3090, VM340, VM370, VM4090, VM460, VX680, VX7090

REF.212B

COMPLET SHAKING ROD SHAPED CONROD

Comp. -

7030L, 7030M, 7030M H, 8030L, 9030L, 9040L, 9040M, 9050L H, 9050L L, 9050L SH, 9060L, 9060L GE, 9060L H, 9060L SH, 9070L H, 9070L L, 9070L L T5, 9070L SH, 9070M, 9080L, 9080L GE, 9080L H, 9080L SH, 9090L, 9090L GE, 9090L H, 9090L H T4, 9090L H T5, 9090L SH, 9090L SH T4, 9090L SH T5, 9090L T3, 9090X, 9090X GE, 9090X GE T3, 9090X GE T4, 9090X GE T5, 9090X H, 9090X H H, 9090X H T4, 9090X O, 9090X O GE, 9090X O GE T3, 9090X O GE T4, 9090X O GE T5, 9090X O H T4, 9090X O T3, 9090X O T4, 9090X O T5, 9090X OP, 9090X OP GE, 9090X T3, 9090X T4, 9090X T5, , VL5060, VL5080, VL5090, VL530, VL540, VL550, VL570, VL600, VL6040, VL6050, VL6060, VL6070, VL6080, VL6090, VL610, VL620, VL630, VL640, VL660, VM3080, VM3080 AL, VM3090, VM340, VM370, VM4090, VM460, VX680, VX7090

REF.226A

PROTECTOR SHAKING ROD NEW

Comp. 944027099

7030L, 7030M, 7030M H, 8030L, 9030L, 9040L, 9040M, 9050L H, 9050L L, 9050L SH, 9060L, 9060L GE, 9060L H, 9060L SH, 9070L H, 9070L L, 9070L L T5, 9070L SH, 9070M, 9080L, 9080L GE, 9080L H, 9080L SH, 9090L, 9090L GE, 9090L H, 9090L H T4, 9090L H T5, 9090L SH, 9090L SH T4, 9090L SH T5, 9090L T3, 9090X, 9090X GE, 9090X GE T3, 9090X GE T4, 9090X GE T5, 9090X H, 9090X H H, 9090X H T4, 9090X O, 9090X O GE, 9090X O GE T3, 9090X O GE T4, 9090X O GE T5, 9090X O H T4, 9090X O T3, 9090X O T4, 9090X O T5, VL5080, VL5090, VL550, VL570, VL6050, VL6060, VL6070, VL6080, VL6090, VL610, VL620, VL630, VL640, VL660, VM3080, VM3080 AL, VM3090, VM340, VM370, VM4090, VM460, VX680, VX7090

REF.227A

STAINLESS STEEL END FITTING FOR SHAKING ROD

Comp. 944029130

7030L, 7030M, 7030M H, 8030L, 9030L, 9040L, 9040M, 9050L H, 9050L L, 9050L SH, 9060L, 9060L GE, 9060L H, 9060L SH, 9070L H, 9070L L, 9070L L T5, 9070L SH, 9070M, 9080L, 9080L GE, 9080L H, 9080L SH, 9090L, 9090L GE, 9090L H, 9090L H T4, 9090L H T5, 9090L SH, 9090L SH T4, 9090L SH T5, 9090L T3, 9090X, 9090X GE, 9090X GE T3, 9090X GE T4, 9090X GE T5, 9090X H, 9090X H H, 9090X H T4, 9090X O, 9090X O GE, 9090X O GE T3, 9090X O GE T4, 9090X O GE T5, 9090X O H T4, 9090X O T3, 9090X O T4, 9090X O T5, 9090X OP, 9090X OP GE, 9090X T3, 9090X T4, 9090X T5, VL5060, VL5080, VL5090, VL530, VL540, VL550, VL570, VL600, VL6040, VL6050, VL6060, VL6070, VL6080, VL6090, VL610, VL620, VL630, VL640, VL660, VM3080, VM3080 AL, VM3090, VM340, VM370, VM4090, VM460, VN2090, VN300, VX680, VX7090

REF.263A

SHAKING HOLDER FLANGE IN STAINLESS STEEL

Comp. 944001181

1620, 1620S, 2420, 2520, 2620, 2720, 7030L, 7030M, 7030M H, 8030L, 9030L, 9040L, 9040M, 9050L H, 9050L L, 9050L SH, 9060L, 9060L GE, 9060L H, 9060L SH, 9070L H, 9070L L, 9070L L T5, 9070L SH, 9070M, 9080L, 9080L GE, 9080L H, 9080L SH, 9090L, 9090L GE, 9090L H, 9090L H T4, 9090L H T5, 9090L SH, 9090L SH T4, 9090L SH T5, 9090L T3, 9090X, 9090X GE, 9090X GE T3, 9090X GE T4, 9090X GE T5, 9090X H, 9090X H H, 9090X H T4, 9090X O, 9090X O GE, 9090X O GE T3, 9090X O GE T4, 9090X O GE T5, 9090X O H T4, 9090X O T3, 9090X O T4, 9090X O T5, 9090X OP, 9090X OP GE, 9090X T3, 9090X T4, 9090X T5, SB33, SB35, SB36, SB52, SB53, SB54, SB55, SB56, SB58, SB60, SB62, SB64, SB65, VL5060, VL5080, VL5090, VL530, VL540, VL550, VL570, VL600, VL6040, VL6050, VL6060, VL6070, VL6080, VL6090, VL610, VL620, VL630, VL640, VL660, VM3080, VM3080 AL, VM3090, VM340, VM370, VM4090, VM460, VN2080, VN2090, VN300, VX680, VX7090

REF.286A

BRAUD LINK CONROD SET - NEW VERSION

Comp. -

VL5060 ,VL6040 ,7030L ,8030L ,9070L L ,9050L L ,9040L ,9090X GE T4 ,9090X T4 ,9090X H T4 ,9090X GE T5 ,9090X T5 ,9060L ,9030L ,VL530 ,VL540 ,VL600 ,SB33 ,SB35 ,SB53 ,SB55 ,9090X GE T3 ,9090X T3 ,9090L T3 ,9070L L T5

REF.286B

BRAUD LINK SHAPED CONROD SET - NEW VERSION

Comp. -

VL5060 ,VL6040 ,7030L ,8030L ,9070L L ,9050L L ,9040L ,9090X GE T4 ,9090X T4 ,9090X H T4 ,9090X GE T5 ,9090X T5 ,9060L ,9030L ,VL530 ,VL540 ,VL600 ,SB33 ,SB35 ,SB53 ,SB55 ,9090X GE T3 ,9090X T3 ,9090L T3 ,9070L L T5

REF.287A

LINK CONROD SET METALLIC ROD REPLACEMENT

Comp. -

VL5080 ,VL5090 ,VL6050 ,VL6060 ,VL6080 ,VL6090 ,VM3080 AL ,VM3090 ,VM370 ,VM4090 ,VM460 ,VX7090 ,7030L ,7030M ,8030L ,9080L GE ,9080L H ,9080L SH ,9090L ,9090L H ,9090L SH ,9050L H ,9090L H T4 ,9070L H ,9070L L ,9050L L ,9040L ,9060L GE ,9060L H ,9060L SH ,9070M ,9040M ,9090X O H T4 ,9090X GE ,9090X ,9090X H ,9090X GE T4 ,9090X T4 ,9090X H T4 ,9090X GE T5 ,9090X T5 ,VL640 ,VL660 ,VX680 ,9060L ,9030L ,VL550 ,VL570 ,9090L GE ,VL6070 ,VL610 ,VL620 ,VL630 ,9090L H T5 ,9090L SH T4 ,9090X H H ,9090X GE T3 ,9090X T3 ,9090L T3 ,9090L SH T5 ,7030M H ,9050L SH ,9070L SH ,9070L L T5 ,

REF.287B

LINK SHAPED CONROD SET METALLIC ROD REPLACEMENT

Comp. -

VL5080 ,VL5090 ,VL6050 ,VL6060 ,VL6080 ,VL6090 ,VM3080 AL ,VM3090 ,VM370 ,VM4090 ,VM460 ,VX7090 ,7030L ,7030M ,8030L ,9080L GE ,9080L H ,9080L SH ,9090L ,9090L H ,9090L SH ,9050L H ,9090L H T4 ,9070L H ,9070L L ,9050L L ,9040L ,9060L GE ,9060L H ,9060L SH ,9070M ,9040M ,9090X O H T4 ,9090X GE ,9090X ,9090X H ,9090X GE T4 ,9090X T4 ,9090X H T4 ,9090X GE T5 ,9090X T5 ,VL640 ,VL660 ,VX680 ,9060L ,9030L ,VL550 ,VL570 ,9090L GE ,VL6070 ,VL610 ,VL620 ,VL630 ,9090L H T5 ,9090L SH T4 ,9090X H H ,9090X GE T3 ,9090X T3 ,9090L T3 ,9090L SH T5 ,7030M H ,9050L SH ,9070L SH ,9070L L T5 ,

REF.290A

SHAKING FLANGE HEXAGONAL HOLE COMPATIBLE

Comp. 920017521

1620, 1620S, 2420, 2520, 2620, 2720, 7030L, 7030M, 7030M H, 8030L, 9030L, 9040L, 9040M, 9050L H, 9050L L, 9050L SH, 9060L, 9060L GE, 9060L H, 9060L SH, 9070L H, 9070L L, 9070L L T5, 9070L SH, 9070M, 9080L, 9080L GE, 9080L H, 9080L SH, 9090L, 9090L GE, 9090L H, 9090L H T4, 9090L H T5, 9090L SH, 9090L SH T4, 9090L SH T5, 9090L T3, 9090X, 9090X GE, 9090X GE T3, 9090X GE T4, 9090X GE T5, 9090X H, 9090X H H, 9090X H T4, 9090X O H T4, 9090X T3, 9090X T4, 9090X T5, SB33, SB35, SB36, SB52, SB53, SB54, SB55, SB56, SB58, SB60, SB62, SB64, SB65, VL5060, VL5080, VL5090, VL530, VL540, VL550, VL570, VL600, VL6040, VL6050, VL6060, VL6070, VL6080, VL6090, VL610, VL620, VL630, VL640, VL660, VM3080, VM3080 AL, VM3090, VM340, VM370, VM4090, VM460, VN2090, VN300, VX680, VX7090

REF.290B

SHAKING FLANGE ROUND HOLE

Comp. 944025756

7030M, 7030M H, 8030L, 9040L, 9040M, 9050L H, 9050L L, 9050L SH, 9060L, 9060L GE, 9060L H, 9060L SH, 9070L H, 9070L L, 9070L L T5, 9070L SH, 9070M, 9080L, 9080L GE, 9080L H, 9080L SH, 9090L, 9090L GE, 9090L H, 9090L H T4, 9090L H T5, 9090L SH, 9090L SH T4, 9090L SH T5, 9090L T3, 9090X, 9090X GE, 9090X GE T3, 9090X GE T4, 9090X GE T5, 9090X H, 9090X H H, 9090X H T4, 9090X O, 9090X O GE, 9090X O GE T3, 9090X O GE T4, 9090X O GE T5, 9090X O H T4, 9090X O T3, 9090X O T4, 9090X O T5, 9090X OP, 9090X OP GE, 9090X T3, 9090X T4, 9090X T5, VL5060, VL5080, VL5090, VL530, VL540, VL550, VL570, VL6040, VL6050, VL6060, VL6070, VL6080, VL6090, VL610, VL620, VL630, VL640, VL660, VM3080, VM3080 AL, VM3090, VM370, VM4090, VM460, VN2090, VX680, VX7090

REF.291A

STAINLESS STEEL SHAKING ROD FIXING PLATE

Comp. 944007696

1620, 1620S, 2420, 2520, 2620, 2720, 7030L, 7030M, 7030M H, 8030L, 9030L, 9040L, 9040M, 9050L H, 9050L L, 9050L SH, 9060L, 9060L GE, 9060L H, 9060L SH, 9070L H, 9070L L, 9070L L T5, 9070L SH, 9070M, 9080L, 9080L GE, 9080L H, 9080L SH, 9080H L, 9080N L, 9090L, 9090L GE, 9090L H, 9090L H T4, 9090L H T5, 9090L SH, 9090L SH T4, 9090L SH T5, 9090L T3, 9090X, 9090X GE, 9090X GE T3, 9090X GE T4, 9090X GE T5, 9090X H, 9090X H H, 9090X H T4, 9090X O, 9090X O GE, 9090X O GE T3, 9090X O GE T4, 9090X O GE T5, 9090X O H T4, 9090X O T3, 9090X O T4, 9090X O T5, 9090X OP, 9090X OP GE, 9090X T3, 9090X T4, 9090X T5, SB33, SB35, SB36, SB52, SB53, SB54, SB55, SB56, SB58, SB60, SB62, SB64, SB65, VL5060, VL5080, VL5090, VL530, VL540, VL550, VL570, VL600, VL6040, VL6050, VL6060, VL6070, VL6080, VL6090, VL610, VL620, VL630, VL640, VL660, VM3080, VM3080 AL, VM3090, VM340, VM370, VM4090, VM460, VN2080, VN2090, VN240, VN260, VN300, VX680, VX7090

REF.292A

STAINLESS STEEL CONROD PLATE

Comp. 944027125

7030L, 7030M, 7030M H, 8030L, 9030L, 9040L, 9040M, 9050L H, 9050L L, 9050L SH, 9060L, 9060L GE, 9060L H, 9060L SH, 9070L H, 9070L L, 9070L L T5, 9070L SH, 9070M, 9080L, 9080L GE, 9080L H, 9080L SH, 9090L, 9090L GE, 9090L H, 9090L H T4, 9090L H T5, 9090L SH, 9090L SH T4, 9090L SH T5, 9090L T3, 9090X, 9090X GE, 9090X GE T3, 9090X GE T4, 9090X GE T5, 9090X H, 9090X H H, 9090X H T4, 9090X O, 9090X O GE, 9090X O GE T3, 9090X O GE T4, 9090X O GE T5, 9090X O H T4, 9090X O T3, 9090X O T4, 9090X O T5, 9090X OP, 9090X OP GE, 9090X T3, 9090X T4, 9090X T5, SB33, SB35, SB53, SB55, VL5060, VL5080, VL5090, VL530, VL540, VL550, VL570, VL600, VL6040, VL6050, VL6060, VL6070, VL6080, VL6090, VL610, VL620, VL630, VL640, VL660, VM3080, VM3080 AL, VM3090, VM340, VM370, VM4090, VM460, VX680, VX7090

REF.297A

PROTECTOR SHAKING ROD NEW sup

Comp. 944026496

7030L, 7030M, 7030M H, 8030L, 9030L, 9040L, 9040M, 9050L H, 9050L L, 9050L SH, 9060L, 9060L GE, 9060L H, 9060L SH, 9070L H, 9070L L, 9070L L T5, 9070L SH, 9070M, 9080L, 9080L GE, 9080L H, 9080L SH, 9090L, 9090L GE, 9090L H, 9090L H T4, 9090L H T5, 9090L SH, 9090L SH T4, 9090L SH T5, 9090L T3, 9090X, 9090X GE, 9090X GE T3, 9090X GE T4, 9090X GE T5, 9090X H, 9090X H H, 9090X H T4, 9090X O, 9090X O GE, 9090X O GE T3, 9090X O GE T4, 9090X O GE T5, 9090X O H T4, 9090X O T3, 9090X O T4, 9090X O T5, 9090X OP, 9090X OP GE, 9090X T3, 9090X T4, 9090X T5, VL5060, VL5080, VL5090, VL530, VL540, VL550, VL570, VL600, VL6040, VL6050, VL6060, VL6070, VL6080, VL6090, VL610, VL620, VL630, VL640, VL660, VM3080, VM3080 AL, VM3090, VM370, VM4090, VM460, VN2090, VX680, VX7090

REF.298A

BOLT SUPPORT FOR 2 SCREWS

Comp. 944026586

7030L, 8030L, 9030L, 9040L, 9050L L, 9060L, 9070L L, 9070L L T5, 9090L T3, 9090X GE T3, 9090X GE T4, 9090X GE T5, 9090X H T4, 9090X T3, 9090X T4, 9090X T5, SB33, SB35, SB53, SB55, VL5060, VL530, VL540, VL600, VL6040

REF.717A

NON-FINAL SUPPORT

Comp. 944005665

7030L, 7030M, 7030M H, 8030L, 9030L, 9040L, 9040M, 9050L H, 9050L L, 9060L, 9060L GE, 9060L H, 9070L H, 9070L L, 9070L L T5, 9070M, 9080L, 9080L GE, 9080L H, 9090L, 9090L GE, 9090L H, 9090L H T4, 9090L H T5, 9090L T3, 9090X, 9090X GE, 9090X GE T3, 9090X GE T4, 9090X GE T5, 9090X H, 9090X H H, 9090X H T4, 9090X O, 9090X O GE, 9090X O GE T3, 9090X O GE T4, 9090X O GE T5, 9090X O H T4, 9090X O T3, 9090X O T4, 9090X O T5, 9090X OP, 9090X OP GE, 9090X T3, 9090X T4, 9090X T5, SB33, SB35, SB36, SB53, SB55, SB56, SB58, SB60, SB62, SB64, SB65, VL5060, VL5080, VL5090, VL530, VL540, VL550, VL570, VL600, VL6040, VL6050, VL6060, VL6070, VL6080, VL6090, VL610, VL620, VL630, VL640, VL660, VM3080, VM3080 AL, VM3090, VM340, VM370, VM4090, VM460, VN2090, VN260, VN300, VX680, VX7090

Check Ref. Before.

All trademarks belong to their respective owners and their use is for informational purposes only.

WWW.EDUARDOREPUESTOSAGRICOLAS.COM

VAT not included

Free EU transport on orders 600€

NEW HOLLAND-BRAUD COMPATIBLE

EDUARDO

REF.293A

COVER BELT VL/VM/VX/SB (600mm x 1.145mm) 14 holes

Comp. 944026645,,944009230

SB36, SB56, SB58, SB60, SB62, SB64, SB65, VL600, VL6040, VL6050, VL6060, VL6070, VL6080, VL6090, VL610, VL620, VL630, VL640, VL660, VM4090, VM460, VX680, VX7090

REF.293B

COVER BELT SB33/35/53/55 (450mm x1145mm) 1 channel 10 holes

Comp. 944010278

SB33, SB35, SB53, SB55, VL530

REF.293C

COVER BELT VL9000L/9000X (700mm x 1.327mm)17 holes

Comp. 84193392

9030L, 9040L, 9050L H, 9050L L, 9060L, 9060L GE, 9060L H, 9060L SH, 9070L H, 9070L L, 9070L L T5, 9080L, 9080L GE, 9080L H, 9080L SH, 9090L H, 9090L H T4, 9090L H T5, 9090L T3, 9090X, 9090X H, 9090X H T4, 9090X T3, 9090X T4, 9090X T5

REF.293D

COVER BELT 9090 OLIVE CENTRAL(450mmx2.161mm)10 holes

Comp. 84321610

9090X O, 9090X O GE, 9090X O GE T3, 9090X O GE T4, 9090X O GE T5, 9090X O H T4, 9090X O T3, 9090X O T4, 9090X O T5, 9090X OP, 9090X OP GE, VX7090

REF.293E

COVER BELT 9090 OLIVE SIDE (225mm x 1.690mm) 5 holes

Comp. 84324465

9090X O, 9090X O H T4, 9090X O T3, 9090X O T4, 9090X O T5, 9090X OP, VX7090

REF.293G

ROLL TAPE 2-ply (3.2mm) 450mm x 1m

Comp. -

1214, 1620, 1620S, 2414, 2420, 2514, 2520, 2614, 2620, 2714, 2720, 7030L, 7030M, 7030M H, 8030L, 9030L, 9040L, 9040M, 9050L H, 9050L L, 9050L SH, 9060L, 9060L GE, 9060L H, 9060L SH, 9070L H, 9070L L, 9070L L T5, 9070L SH, 9070M, 9080L, 9080L GE, 9080L H, 9080L SH, 9080N H, 9080N L, 9090L, 9090L GE, 9090L H, 9090L H T4, 9090L H T5, 9090L SH, 9090L SH T4, 9090L SH T5, 9090L T3, 9090X, 9090X GE, 9090X GE T3, 9090X GE T4, 9090X GE T5, 9090X H, 9090X H H, 9090X H T4, 9090X O, 9090X O GE, 9090X O GE T3, 9090X O GE T4, 9090X O GE T5, 9090X O H T4, 9090X O T3, 9090X O T4, 9090X O T5, 9090X OP, 9090X OP GE, 9090X T3, 9090X T4, 9090X T5, SB33, SB35, SB36, SB52, SB53, SB54, SB55, SB56, SB58, SB60, SB62, SB64, SB65, VL5060, VL5080, VL5090, VL530, VL540, VL550, VL570, VL600, VL6040, VL6050, VL6060, VL6070, VL6080, VL6090, VL610, VL620, VL630, VL640, VL660, VM3080, VM3080 AL, VM3090, VM340, VM370, VM4090, VM460, VN2080, VN2090, VN240, VN260, VN300, VX680, VX7090

REF.293I

COVER BELT SB52/54(450mmx1145mm)2 extreme channels inf.10 holes.

Comp. 913475510

1214, 1620, 1620S, 2414, 2420, 2514, 2520, 2614, 2620, 2714, 2720, SB52, SB54

REF.293N

COVER BELT (600mm x 1.310) 14 holes

Comp. 84358254

8030 L, 8030 L T5, 9060 L SH, 9080 L SH, 9090 L SH

REF.293K

ENTRY

Comp. 944027604

SB56, SB58, SB60, SB62, SB64, VL600, VL6040, VL6050, VL6060, VL6070, VL6080, VL6090, VL610, VL620, VL630, VL640, VL660, VM4090, VM460, VX680, VX7090

REF.293L

ROLL TAPE 3-ply (4.2mm) 450mm x 1m

Comp. -

1214, 1620, 1620S, 2414, 2420, 2514, 2520, 2614, 2620, 2714, 2720, 7030L, 7030M, 7030M H, 8030L, 9030L, 9040L, 9040M, 9050L H, 9050L L, 9050L SH, 9060L, 9060L GE, 9060L H, 9060L SH, 9070L H, 9070L L, 9070L L T5, 9070L SH, 9070M, 9080L, 9080L GE, 9080L H, 9080L SH, 9080N H, 9080N L, 9090L, 9090L GE, 9090L H, 9090L H T4, 9090L H T5, 9090L SH, 9090L SH T4, 9090L SH T5, 9090L T3, 9090X, 9090X GE, 9090X GE T3, 9090X GE T4, 9090X GE T5, 9090X H, 9090X H H, 9090X H T4, 9090X O, 9090X O GE, 9090X O GE T3, 9090X O GE T4, 9090X O GE T5, 9090X O H T4, 9090X O T3, 9090X O T4, 9090X O T5, 9090X OP, 9090X OP GE, 9090X T3, 9090X T4, 9090X T5, SB33, SB35, SB36, SB52, SB53, SB54, SB55, SB56, SB58, SB60, SB62, SB64, SB65, VL5060, VL5080, VL5090, VL530, VL540, VL550, VL570, VL600, VL6040, VL6050, VL6060, VL6070, VL6080, VL6090, VL610, VL620, VL630, VL640, VL660, VM3080, VM3080 AL, VM3090, VM340, VM370, VM4090, VM460, VN2080, VN2090, VN240, VN260, VN300, VX680, VX7090

REF.293M

COVER BELT (700mm x 1.135mm)17 holes

Comp. 84193393

9040M, 9060L GE, 9070M, 9080L GE, 9090L GE, 9090X GE, 9090X H H

REF.294B

BELT JOINT FOR 14 HOLES (stainless)

Comp. 944005402

8030L, 9050L SH, 9060L SH, 9070L SH, 9080L SH, 9090L SH, 9090L SH T4, 9090L SH T5, SB36, SB56, SB58, SB60, SB62, SB64, SB65, VL600, VL6040, VL6050, VL6060, VL6070, VL6080, VL6090, VL610, VL620, VL630, VL640, VL660, VM4090, VM460, VX680, VX7090

REF.294C

BELT JOINT FOR 10 HOLES (stainless)

Comp. 944010278

SB33, SB35, SB53, SB55

REF.294D

BELT JOINT FOR 17 HOLES(stainless)

Comp. 84199473

9090X, 9090X H

REF.294E

BELT JOINT FOR 5 HOLES (stainless)

Comp. 944035544

9090X O, 9090X O GE, 9090X O GE T3, 9090X O GE T4, 9090X O GE T5, 9090X O H T4, 9090X O T3, 9090X O T4, 9090X O T5, 9090X OP, 9090X OP GE, VN2080, VX7090

REF.294F

CONVEYOR BELT FIXING BAR 14 HOLES (alum)

Comp. 944005400

8030L, 9050L SH, 9060L SH, 9070L SH, 9080L SH, 9090L SH, 9090L SH T4, 9090L SH T5, SB36, SB56, SB58, SB60, SB62, SB64, SB65, VL600, VL6040, VL6050, VL6060, VL6070, VL6080, VL6090, VL610, VL620, VL630, VL640, VL660, VM4090, VM460, VX680, VX7090

REF.294G

CONVEYOR BELT FIXING BAR 10 HOLES(alum)

Comp. 944010278

SB33, SB35, SB53, SB55

REF.294H

CONVEYOR BELT FIXING BAR 17 HOLES (alum)

Comp. 84199474

9030L, 9040L, 9040M, 9050L H, 9050L L, 9060L, 9060L GE, 9060L H, 9070L H, 9070L L, 9070L L T5, 9070M, 9080L, 9080L GE, 9080L H, 9090L, 9090L GE, 9090L H, 9090L H T4, 9090L H T5, 9090L T3, 9090X, 9090X GE, 9090X GE T3, 9090X GE T4, 9090X GE T5, 9090X H, 9090X H H, 9090X H T4, 9090X T3, 9090X T4, 9090X T5

REF.294I

CONVEYOR BELT FIXING BAR 5 HOLES (alum)

Comp. 944035543

9090X O, 9090X O GE, 9090X O GE T3, 9090X O GE T4, 9090X O GE T5, 9090X O H T4, 9090X O T3, 9090X O T4, 9090X O T5, 9090X OP, 9090X OP GE, VN2080, VX7090

REF.502B

SCREW+NUT autoblocant UNION CONVER BELT M5-20MM

Comp. 10978280+920008123

1214, 1620, 1620S, 2414, 2420, 2514, 2520, 2614, 2620, 2714, 2720, 7030L, 7030M, 7030M H, 8030L, 9030L, 9040L, 9040M, 9050L H, 9050L L, 9050L SH, 9060L, 9060L GE, 9060L H, 9060L SH, 9070L H, 9070L L, 9070L L T5, 9070L SH, 9070M, 9080L, 9080L GE, 9080L H, 9080L SH, 9080N H, 9080N L, 9090L, 9090L GE, 9090L H, 9090L H T4, 9090L H T5, 9090L SH, 9090L SH T4, 9090L SH T5, 9090L T3, 9090X, 9090X GE, 9090X GE T3, 9090X GE T4, 9090X GE T5, 9090X H, 9090X H H, 9090X H T4, 9090X O, 9090X O GE, 9090X O GE T3, 9090X O GE T4, 9090X O GE T5, 9090X O H T4, 9090X O T3, 9090X O T4, 9090X O T5, 9090X OP, 9090X OP GE, 9090X T3, 9090X T4, 9090X T5, SB33, SB35, SB36, SB52, SB53, SB54, SB55, SB56, SB58, SB60, SB62, SB64, SB65, VL5060, VL5080, VL5090, VL530, VL540, VL550, VL570, VL600, VL6040, VL6050, VL6060, VL6070, VL6080, VL6090, VL610, VL620, VL630, VL640, VL660, VM3080, VM3080 AL, VM3090, VM340, VM370, VM4090, VM460, VN2080, VN2090, VN240, VN260, VN300, VX680, VX7090,0,28

VAT not included

Free EU transport on orders 600€

All trademarks belong to their respective owners and their use is for informational purposes only.

WWW.EDUARDOREPUESTOSAGRICOLAS.COM

Check Ref. Before.

NEW HOLLAND-BRAUD COMPATIBLE

EDUARDO

REF.295A

DRIVE ROLLER FOR 600 MM BELT

Comp. 944005403

SB36, SB56, SB58, SB60, SB62, SB64, SB65, VL600, VL6040, VL6050, VL6060, VL6070, VL6080, VL6090, VL610, VL620, VL630, VL640, VL660, VM4090, VM460, VX680, VX7090

REF.295B

IDLE ROLLER FOR 600 MM BELT

Comp. 944034674

VL600, VL6040, VL6050, VL6060, VL6070, VL6080, VL6090, VL610, VL620, VL630, VL640, VL660, VM4090, VM460, VX680, VX7090

REF.295C

DRIVE ROLLER FOR 450 MM BELT

Comp. 944010279

7030M, 7030M H, 8030L, 9090X O, 9090X O GE, 9090X O GE T3, 9090X O GE T4, 9090X O GE T5, 9090X O H T4, 9090X O T3, 9090X O T4, 9090X O T5, 9090X OP, 9090X OP GE, SB33, SB35, SB53, SB55, SB65, VL5060, VL5080, VL5090, VL530, VL540, VL550, VL570, VM3080, VM3080 AL, VM3090, VM340, VM370, VN2080, VN2090, VN300, VX7090

REF.295P

IDLE ROLLER FOR 450 MM BELT

Comp. 944034672

7030M, 7030M H, 8030L, 9060L GE, 9080L GE, 9090L GE, 9090X GE, 9090X O, 9090X O GE, 9090X O GE T3, 9090X O GE T4, 9090X O GE T5, 9090X O H T4, 9090X O T3, 9090X O T4, 9090X O T5, 9090X OP, 9090X OP GE, VL5060, VL5080, VL5090, VL530, VL540, VL550, VL570, VM3080, VM3080 AL, VM3090, VM340, VM370, VN2080, VN2090, VN300, VX7090

REF.295Q

DRIVE ROLLER FOR 700 MM BELT

Comp. 84193395

9030L, 9040L, 9040M, 9050L H, 9050L L, 9060L, 9060L GE, 9060L H, 9070L H, 9070L L, 9070L L T5, 9070M, 9080L, 9080L GE, 9080L H, 9090L, 9090L GE, 9090L H, 9090L H T4, 9090L H T5, 9090L T3, 9090X, 9090X GE, 9090X GE T3, 9090X GE T4, 9090X GE T5, 9090X H, 9090X H H, 9090X H T4, 9090X T3, 9090X T4, 9090X T5

REF.295R

IDLE ROLLER FOR 700 MM BELT

Comp. 84193394

9030L, 9040L, 9040M, 9050L H, 9050L L, 9060L, 9060L GE, 9060L H, 9070L H, 9070L L, 9070L L T5, 9070M, 9080L, 9080L GE, 9080L H, 9090L, 9090L GE, 9090L H, 9090L H T4, 9090L H T5, 9090L T3, 9090X, 9090X GE, 9090X GE T3, 9090X GE T4, 9090X GE T5, 9090X H, 9090X H H, 9090X H T4, 9090X T3, 9090X T4, 9090X T5

REF.295S

DRIVE ROLLER FOR 225 MM BELT

Comp. 944035528

9090X O, 9090X O GE T3, 9090X O H T4, 9090X O T3, 9090X O T4, 9090X O T5, 9090X OP, VN2080, VX7090

REF.295T

IDLE ROLLER FOR 225 MM BELT

Comp. 84343365

9090X O, 9090X O GE, 9090X O GE T3, 9090X O GE T4, 9090X O GE T5, 9090X O H T4, 9090X O T3, 9090X O T4, 9090X O T5, 9090X OP, 9090X OP GE, VX7090

REF.295D

DRIVE ROLLER FOR 450 MM BELT, MODELS SB52/54

Comp. 913308630

1214, 1620, 1620S, 2414, 2420, 2514, 2520, 2614, 2620, 2714, 2720, SB52, SB54

REF.547A

RUBBER REGULATION CLEANING

Comp. 944005421 / 84196271

SB36, SB56, SB58, SB60, SB62, SB64, SB65, VL600, VL6040, VL6050, VL6060, VL6070, VL6080, VL6090, VL610, VL620, VL630, VL640, VL660, VM4090, VM460, VX680, VX7090

REF.547B

RUBBER BIB (SB64,60,58,65)

Comp. 944005420

SB33, SB35, SB36, SB53, SB55, SB56, SB58, SB60, SB62, SB64, SB65, VN240, VN260

REF.556A

ROLLER CENTRAL CLEANER

Comp. 944007948

7030L, 7030M, 7030M H, 8030L, 9030L, 9040L, 9040M, 9050L H, 9050L L, 9050L SH, 9060L, 9060L GE, 9060L H, 9060L SH, 9070L H, 9070L L, 9070L L T5, 9070L SH, 9070M, 9080L, 9080L GE, 9080L H, 9080L SH, 9080N H, 9080N L, 9090L, 9090L GE, 9090L H, 9090L H T4, 9090L H T5, 9090L SH, 9090L SH T4, 9090L SH T5, 9090L T3, 9090X, 9090X GE, 9090X GE T3, 9090X GE T4, 9090X GE T5, 9090X H, 9090X H H, 9090X H T4, 9090X T3, 9090X T4, 9090X T5, SB33, SB35, SB36, SB53, SB55, SB56, SB58, SB60, SB62, SB64, SB65, VL5060, VL5080, VL5090, VL530, VL540, VL550, VL570, VL600, VL6040, VL6050, VL6060, VL6070, VL6080, VL6090, VL610, VL620, VL630, VL640, VL660, VM3080, VM3080 AL, VM3090, VM340, VM370, VM4090, VM460, VN2080, VN2090, VN240, VN260, VN300, VX680, VX7090

REF.579E

BEARING 2004RHS(20X47X14)

Comp. 84330054

11.90, 9000

REF.570A

Ø25 MM BALL BEARING WITH RING FOR CROSS BELT(

Comp. 920019044,84287485

1214, 1620, 1620S, 2414, 2420, 2514, 2520, 2614, 2620, 2714, 2720, 7030L, 7030M, 7030M H, 8030L, 9030L, 9040L, 9040M, 9050L H, 9050L L, 9050L SH, 9060L, 9060L GE, 9060L H, 9060L SH, 9070L H, 9070L L, 9070L L T5, 9070L SH, 9070M, 9080L, 9080L GE, 9080L H, 9080L SH, 9080N H, 9080N L, 9090L, 9090L GE, 9090L H, 9090L H T4, 9090L H T5, 9090L SH, 9090L SH T4, 9090L SH T5, 9090L T3, 9090X, 9090X GE, 9090X GE T3, 9090X GE T4, 9090X GE T5, 9090X H, 9090X H H, 9090X H T4, 9090X O GE, 9090X O GE T3, 9090X O GE T4, 9090X O GE T5, 9090X OP GE, 9090X T3, 9090X T4, 9090X T5, SB33, SB35, SB36, SB52, SB53, SB54, SB55, SB56, SB58, SB60, SB62, SB64, SB65, T140, T240, TB10, TB15, VL5060, VL5080, VL5090, VL530, VL540, VL550, VL570, VL600, VL6040, VL6050, VL6060, VL6070, VL6080, VL6090, VL610, VL620, VL630, VL640, VL660, VM3080, VM3080 AL, VM3090, VM340, VM370, VM4090, VM460, VN2080, VN2090, VN240, VN260, VN300, VX680, VX7090

REF.570L

Ø20x14 mm BALL BEARING DESTEMMER

Comp. 84287484

7030M, 7030M H, 8030L, 9040L, 9040M, 9060L, 9060L GE, 9060L H, 9060L SH, 9080L, 9080L GE, 9080L H, 9080L SH, 9090L, 9090L GE, 9090L H, 9090L SH, 9090X, 9090X GE, 9090X H, 9090X H H, SB33, SB35, SB36, SB52, SB53, SB54, SB55, SB56, SB58, SB60, SB62, SB64, SB65, VL5060, VL5080, VL5090, VL530, VL540, VL550, VL570, VL600, VL6040, VL6050, VL6060, VL6070, VL6080, VL6090, VL610, VL620, VL630, VL640, VL660, VM3080, VM3080 AL, VM3090, VM340, VM370, VM4090, VM460, VN2090, VN300, VX680, VX7090

REF.570M

Ø30x18mm BALL BEARING MOTOR SUPPORT SEALER

Comp. 84287487

7030M, 7030M H, 8030L, 9040L, 9040M, 9060L, 9060L GE, 9060L H, 9060L SH, 9080L, 9080L GE, 9080L H, 9080L SH, 9090L, 9090L GE, 9090L H, 9090L SH, 9090X, 9090X GE, 9090X H, 9090X H H, SB33, SB35, SB36, SB52, SB53, SB54, SB55, SB56, SB58, SB60, SB62, SB64, SB65, VL5060, VL5080, VL5090, VL530, VL540, VL550, VL570, VL600, VL6040, VL6050, VL6060, VL6070, VL6080, VL6090, VL610, VL620, VL630, VL640, VL660, VM3080, VM3080 AL, VM3090, VM340, VM370, VM4090, VM460, VN2090, VN300, VX680, VX7090

REF.579A

TAPE PROTECTORS

Comp. 920019046

7030L, 7030M, 7030M H, 8030L, 9030L, 9040L, 9040M, 9050L H, 9050L L, 9050L SH, 9060L, 9060L GE, 9060L H, 9060L SH, 9070L H, 9070L L, 9070L L T5, 9070L SH, 9070M, 9080L, 9080L GE, 9080L H, 9080L SH, 9080N H, 9080N L, 9090L, 9090L GE, 9090L H, 9090L H T4, 9090L H T5, 9090L SH, 9090L SH T4, 9090L SH T5, 9090L T3, 9090X, 9090X GE, 9090X GE T3, 9090X GE T4, 9090X GE T5, 9090X H, 9090X H H, 9090X H T4, 9090X O, 9090X O GE T3, 9090X O T3, 9090X O T4, 9090X OP, 9090X T3, 9090X T4, 9090X T5, SB33, SB35, SB53, SB55, SB65, T140, T240, VL5060, VL5080, VL5090, VL530, VL540, VL550, VL570, VL600, VL6040, VL6050, VL6060, VL6070, VL6080, VL6090, VL610, VL620, VL630, VL640, VL660, VM3080, VM3080 AL, VM3090, VM340, VM370, VM4090, VM460, VN2080, VN2090, VN300, VX680, VX7090

NEW ! REF.570Q

DIAM 25 BALL BEARING 1 NEXT

Comp. -

7030M, 7030M H, 8030L, 9040L, 9040M, 9060L, 9060L GE, 9060L H, 9060L SH, 9080L, 9080L GE, 9080L H, 9080L SH, 9090L, 9090L GE, 9090L H, 9090L SH, 9090X, 9090X GE, 9090X H, 9090X H H0, VL6070, VL6080, VL6090, VL610, VL620, VL630, VL640, VL660, VM3080, VM3080 AL, VM3090, VM340, VM370, VM4090, VM460, VN2090, VN300, VX680, VX7090

NEW ! REF.579C

BEARING WITH FLANGE DIAM 20

Comp. 84321506

11.90,7.30L,7030L,7030M,8.50L,8030L,9030L,9040L,9040M,9050L,9060L,9070L,9070M,9080L,9080N,9090L,9090X

NEW ! REF.579D

BEARING WITH FLANGE DIAM 25

Comp. 84321507

7030L,7030M, 8.50L,8030L,9030L,9040L,9040M,9050L, 9060L,9070L,9070M,9080L,9080N,9090L ,9090X

Check Ref. Before.

All trademarks belong to their respective owners and their use is for informational purposes only.

WWW.EDUARDOREPUESTOSAGRICOLAS.COM

VAT not included

Free EU transport on orders 600€

NEW HOLLAND-BRAUD COMPATIBLE

EDUARDO

REF.213B

LARGE DESTEMMER FINGER

Comp. 944027438

9030L, 9040L, 9040M, 9050L H, 9050L L, 9050L SH, 9060L, 9060L GE, 9060L H, 9060L SH, 9070L H, 9070L L, 9070L L T5, 9070L SH, 9070M, 9080L, 9080L GE, 9080L H, 9080L SH, 9080N H, 9080N L, 9090L, 9090L GE, 9090L H, 9090L H T4, 9090L H T5, 9090L SH T4, 9090L SH T5, 9090L T3, 9090X, 9090X GE T3, 9090X GE T4, 9090X GE T5, 9090X H, 9090X H H, 9090X H T4, 9090X T3, 9090X T4, 9090X T5, SB36, SB56, SB58, SB60, SB62, SB64, SB65, VL600, VL6040, VL6050, VL6060, VL6070, VL6080, VL6090, VL610, VL620, VL630, VL640, VL660, VM4090, VM460, VX680, VX7090

REF.213D

STANDARD DESTEMMER FINGER

Comp. 87681134

7030L, 7030M, 7030M H, 8030L, 9030L, 9040L, 9040M, 9050L H, 9050L L, 9050L SH, 9060L, 9060L GE, 9060L H, 9060L SH, 9070L H, 9070L L, 9070L L T5, 9070L SH, 9070M, 9080L, 9080L GE, 9080L H, 9080L SH, 9080N H, 9080N L, 9090L, 9090L GE, 9090L H, 9090L H T4, 9090L H T5, 9090L SH T4, 9090L SH T5, 9090L T3, 9090X, 9090X GE T3, 9090X GE T4, 9090X GE T5, 9090X H, 9090X H H, 9090X H T4, 9090X T3, 9090X T4, 9090X T5, SB33, SB35, SB53, SB55, VL5060, VL5080, VL5090, VL530, VL540, VL550, VL570, VM3080, VM3080 AL, VM3090, VM340, VM370, VN2080, VN2090, VN300

REF.214B

BELT PIN (PINK)

Comp. -

9030L, 9040L, 9040M, 9050L H, 9050L L, 9060L, 9060L GE, 9060L H, 9070L H, 9070L L, 9070L L T5, 9070M, 9080L, 9080L GE, 9080L H, 9090L, 9090L GE, 9090L H, 9090L H T4, 9090L H T5, 9090L T3, 9090X, 9090X GE T3, 9090X GE T4, 9090X GE T5, 9090X H, 9090X H H, 9090X H T4, 9090X T3, 9090X T4, 9090X T5, VL5060, VL5080, VL5090, VM3080, VM3090, VX7090

REF.214C

BELT PIN (PINK) 0,2mm THICKER

Comp. 944027440

9030L, 9040L, 9040M, 9050L H, 9050L L, 9060L, 9060L GE, 9060L H, 9070L H, 9070L L, 9070L L T5, 9070M, 9080L, 9080L GE, 9080L H, 9090L, 9090L GE, 9090L H, 9090L H T4, 9090L H T5, 9090L T3, 9090X, 9090X GE T3, 9090X GE T4, 9090X GE T5, 9090X H, 9090X H H, 9090X H T4, 9090X T3, 9090X T4, 9090X T5, VL5060, VL5080, VL5090, VM3080, VM3090, VX7090

REF.295Z

DESTEMMER FINGER HOLDER

Comp. 944027439

7030L, 7030M, 7030M H, 8030L, 9030L, 9040L, 9040M, 9050L H, 9050L L, 9050L SH, 9060L, 9060L GE, 9060L H, 9060L SH, 9070L H, 9070L L, 9070L L T5, 9070L SH, 9070M, 9080L, 9080L GE, 9080L H, 9080L SH, 9080N H, 9080N L, 9090L, 9090L GE, 9090L H, 9090L H T4, 9090L H T5, 9090L SH T4, 9090L SH T5, 9090L T3, 9090X, 9090X GE T3, 9090X GE T4, 9090X GE T5, 9090X H, 9090X H H, 9090X H T4, 9090X T3, 9090X T4, 9090X T5, SB33, SB35, SB36, SB53, SB55, SB56, SB58, SB60, SB62, SB64, VL5060, VL5080, VL5090, VL530, VL540, VL550, VL570, VL600, VL6040, VL6050, VL6060, VL6070, VL6080, VL6090, VL610, VL620, VL630, VL640, VL660, VM3080, VM3080 AL, VM3090, VM340, VM370, VM4090, VM460, VN2080, VN2090, VN300, VX680, VX7090

REF.296A

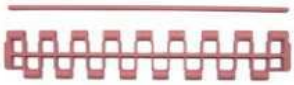

BELT MESH + PIN (PINK)

Comp. 944027670, 944027440

9030L, 9040L, 9040M, 9050L H, 9050L L, 9060L, 9060L GE, 9060L H, 9060L SH, 9070L H, 9070L L, 9070L L T5, 9070M, 9080L, 9080L GE, 9080L H, 9080L SH, 9090L, 9090L GE, 9090L H, 9090L H T4, 9090L H T5, 9090L T3, 9090X, 9090X GE T3, 9090X GE T4, 9090X GE T5, 9090X H, 9090X H H, 9090X H T4, 9090X O GE, 9090X O GE T4, 9090X O H T4, 9090X O T4, 9090X OP, 9090X OP GE, 9090X T3, 9090X T4, 9090X T5, SB33, SB35, SB36, SB53, SB55, SB56, SB58, SB60, SB62, SB64, VL5060, VL5080, VL5090, VL530, VL540, VL550, VL570, VL600, VL6040, VL6050, VL6060, VL6070, VL6080, VL6090, VL610, VL620, VL630, VL640, VL660, VM3080, VM3080 AL, VM3090, VM340, VM370, VM4090, VM460, VN2080, VN2090, VX680, VX7090

REF.296C

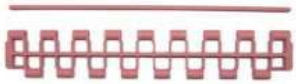

BELT MESH + PIN (PINK) COMPLET VL/VX 92 SETS

Comp. 944031438

9030L, 9040L, 9040M, 9050L H, 9050L L, 9060L, 9060L GE, 9060L H, 9060L SH, 9070L H, 9070L L, 9070L L T5, 9070M, 9080L, 9080L GE, 9080L H, 9080L SH, 9090L, 9090L GE, 9090L H, 9090L H T4, 9090L H T5, 9090L T3, 9090X, 9090X GE T3, 9090X GE T4, 9090X GE T5, 9090X H, 9090X H H, 9090X H T4, 9090X O GE, 9090X O GE T4, 9090X O H T4, 9090X O T4, 9090X OP, 9090X OP GE, 9090X T3, 9090X T4, 9090X T5, SB33, SB35, SB36, SB53, SB55, SB56, SB58, SB60, SB62, SB64, VL5060, VL5080, VL5090, VL530, VL540, VL550, VL570, VL600, VL6040, VL6050, VL6060, VL6070, VL6080, VL6090, VL610, VL620, VL630, VL640, VL660, VM3080, VM3080 AL, VM3090, VM340, VM370, VM4090, VM460, VN2080, VN2090, VX680, VX7090

REF.296D

BELT MESH MORE OPEN + PIN (WHITE)

Comp. 47859604

9050L H, 9090L H T4, 9070L H, 9070L L, 9050L L, 9070M, 9090X GE T4, 9090X T4, 9090X HEAD T4, 9090X GE T5, 9090X T5, 9030L, 9090L H T5, 9090X GE T3, 9090X T3, 9090L T3, 9070L L T5, 9070M T5, 9030L T5, 9070L H T5, 9050L H T5, 9050L L T5

REF.296E

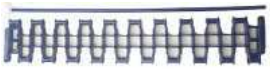

BELT MESH MORE CLOSED + PIN (BLUE)

Comp. 51613223

9050L H, 9090L H T4, 9070L H, 9070L L, 9050L L, 9070M, 9090X GE T5, 9090X T5, 9030L, 9090L H T5, 9090X GE T3, 9090X T3, 9090L T3, 9070L L T5, 9070M T5, 9030L T5, 9070L H T5, 9050L H T5, 9050L L T5

REF.511A

CHAIN TRANSMISSION 60H 79 STEPS

Comp. 920019483, 920017691

9040L, 9060L, 9090L H, 9090X, 9090X GE, 9090X GE T3, 9090X GE T4, 9090X GE T5, 9090X H, 9090X H H, 9090X H T4, 9090X T3, 9090X T4, 9090X T5, SB65, VL5060, VL530, VL540, VL600, VL6040, VM3080, VM340, VX7090

REF.511B

CHAIN UNION TRANSMISSION 60H

Comp. -

9040L, 9060L, 9090L H, 9090X, 9090X GE, 9090X GE T3, 9090X GE T4, 9090X GE T5, 9090X H, 9090X H H, 9090X H T4, 9090X T3, 9090X T4, 9090X T5, SB65, VL5060, VL530, VL540, VL600, VL6040, VM3080, VM340, VX7090

REF.511C

HALF TRANSM. 60H HALF STEP

Comp. -

9040L, 9060L, 9090L H, 9090X, 9090X GE, 9090X GE T3, 9090X GE T4, 9090X GE T5, 9090X H, 9090X H H, 9090X H T4, 9090X T3, 9090X T4, 9090X T5, SB65, VL5060, VL530, VL540, VL600, VL6040, VM3080, VM340, VX7090,7,94

REF.549A

RUBBER STOP (700gr)

Comp. 920017480

1620, 1620S, 2420, 2520, 2620, 2720, SB36, SB52, SB54, SB56, SB58, SB60, SB62, SB64, SB65, VL5080, VL5090, VL550, VL570, VL600, VL6040, VL6050, VL6060, VL6070, VL6080, VL6090, VL610, VL620, VL630, VL640, VL660, VM3080 AL, VM3090, VM370, VM4090, VM460, VX680, VX7090

REF.549B

ANTI-VIBRATION INSULATOR FOR SENSOR ARM

Comp. 920019360

7030L, 8030L, 9030L, 9040L, 9040M, 9050L H, 9050L L, 9050L SH, 9060L, 9060L GE, 9060L H, 9060L SH, 9070L H, 9070L L, 9070L L T5, 9070L SH, 9070M, 9080L, 9080L GE, 9080L H, 9080L SH, 9090L, 9090L GE, 9090L H, 9090L H T4, 9090L H T5, 9090L SH, 9090L SH T4, 9090L SH T5, 9090L T3, 9090X, 9090X GE, 9090X GE T3, 9090X GE T4, 9090X GE T5, 9090X H, 9090X H H, 9090X H T4, 9090X T3, 9090X T4, 9090X T5, SB33, SB35, SB36, SB53, SB55

REF.549C

STOP GOMME(700gr)

Comp. 920019016

SB33, SB35, SB36, SB53, SB55, SB56, SB58, SB60, SB62, SB64, VL5060, VL530, VL540, VL600, VL6040, VM3080, VM340, VN2090, VN300

REF.549D

RUBBER STOP (700gr)

Comp. 920094157

1214, 1620, 1620S, SB33, SB35, SB53, SB55, VL5060, VL530, VL540, VM3080, VM340, VN2090, VN300

REF.549E

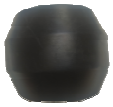

SHOCK ABSORBER (12x14 cm)

Comp. 84348978 / 84126153

9030L, 9040L,9040M,9060L,9080L,9090L,9090X

REF.549F

ELASTIC SUPPORT

Comp. 87742806

10.90X, 11.90X, 9090X OLIVE, VX7090 OLIVE

REF.293R

LONG OLIVE TAPE SIDE EXIT 225X3362MM

Comp. 84424258

10.90X,9090 OLIVE, VX7090 OLIVE

REF.293S

COVER BELT 500X1327MM(12)

Comp. 51452323

VL7030

VAT not included

Free EU transport on orders 600€

All trademarks belong to their respective owners and their use is for informational purposes only.

WWW.EDUARDOREPUESTOSAGRICOLAS.COM

Check Ref. Before.

NEW HOLLAND-BRAUD COMPATIBLE

EDUARDO

REF.555A

DRIVING SPROCKET FOR DESTEMMER CONVEYOR BELT. NEW VERSION (WHITE)

Comp. 87610362, 84484443

9040L, 9040M, 9060L, 9060L GE, 9060L H, 9080L, 9080L GE, 9080L H, 9090L, 9090L GE, 9090L H, 9090X, 9090X H, 9090X H H, SB33, SB35, SB36, SB53, SB55, SB56, SB58, SB60, SB62, SB64, VL5060, VL5080, VL5090, VL530, VL540, VL550, VL570, VL600, VL6040, VL6050, VL6060, VL6070, VL6080, VL6090, VL610, VL620, VL630, VL640, VL660, VM3080, VM3080 AL, VM3090, VM340, VM370, VM4090, VM460, VN2080, VN2090, VN300, VX680, VX7090

REF.555C

DRIVING SPROCKET FOR DESTEMMER CONVEYOR BELT BELT MESH MORE CLOSED

Comp. 51613526

7030L ,7030M ,8030L ,9050L H ,9090L H T4 ,9070L H ,9070L L ,9050L L ,9070M ,9080N HEAD ,9080N H ,9080N L ,9030L ,9090L H T5 ,9090L SH T4 ,9090L T3 ,9090L SH T5 ,7030M HEAD ,9050L SH ,9070L SH ,9070L L T5 ,9050L SH T5 ,9080N L T5 ,9070M T5 ,9030L T5 ,9070L H T5 ,9070L SH T5 ,9050L H T5 ,9050L L T5 ,8030L T5 ,9080N H T5

REF.580A

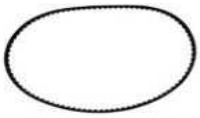

DISPLAYER DESTEMMER

Comp. 920019616

9030L, 9040L, 9040M, 9050L H, 9050L L, 9050L SH, 9060L, 9060L GE, 9060L H, 9060L SH, 9070L H, 9070L L, 9070L L T5, 9070L SH, 9070M, 9080L, 9080L GE, 9080L H, 9080L SH, 9080N H, 9080N L, 9090L, 9090L GE, 9090L H, 9090L H T4, 9090L H T5, 9090L SH, 9090L SH T4, 9090L SH T5, 9090L T3, 9090X, 9090X GE, 9090X H, 9090X H H, 9090X H T4, 9090X O, 9090X O GE, 9090X T3, 9090X T4, 9090X T5, SB33, SB35, SB36, SB53, SB55, SB56, SB58, SB60, SB62, SB64, SB65, VL600, VL6040, VL6050, VL6060, VL6070, VL6080, VL6090, VL610, VL620, VL630, VL640, VL660, VM4090, VM460, VX680, VX7090

REF.570B

FRONT COLUMN BEARING n°11

Comp. 920092458

1214, 1620, 1620S, 2420, 2520, 2620, 2720, 7030M, 7030M H, 8030L, 9040L, 9040M, 9060L, 9060L GE, 9060L H, 9060L SH, 9080L, 9080L GE, 9080L H, 9080L SH, 9090L, 9090L GE, 9090L H, 9090L SH, 9090X, 9090X GE, 9090X H, 9090X H H, SB33, SB35, SB36, SB52, SB53, SB54, SB55, SB56, SB58, SB60, SB62, SB64, SB65, VL5060, VL5080, VL5090, VL530, VL540, VL550, VL570, VL600, VL6040, VL6050, VL6060, VL6070, VL6080, VL6090, VL610, VL620, VL630, VL640, VL660, VM3080, VM3080 AL, VM3090, VM340, VM370, VM4090, VM460, VN2090, VN300, VX680, VX7090

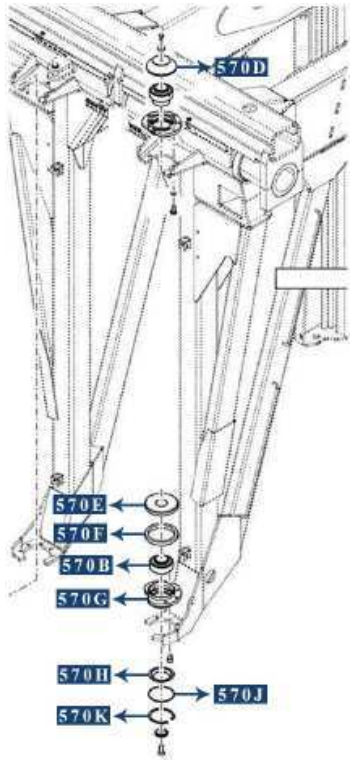

REF.570D*

PLUG WASHER n°6

Comp. 913355562

1214, 1620, 1620S, 2420, 2520, 2620, 2720, 9040L, 9040M, 9060L, 9060L GE, 9060L H, 9060L SH, 9080L, 9080L GE, 9080L H, 9080L SH, 9090L, 9090L GE, 9090L H, 9090L SH, 9090X, 9090X GE, 9090X H, 9090X H H, SB33, SB35, SB36, SB52, SB53, SB54, SB55, SB56, SB58, SB60, SB62, SB64, SB65, VL5060, VL5080, VL5090, VL530, VL540, VL550, VL570, VL600, VL6040, VL6050, VL6060, VL6070, VL6080, VL6090, VL610, VL620, VL630, VL640, VL660, VM3080, VM3080 AL, VM3090, VM340, VM370, VM4090, VM460, VN2090, VN300, VX680, VX7090

REF.570E*

HERMETIC WASHER n°13

Comp. 944007707

9040L, 9040M, 9060L, 9060L GE, 9060L H, 9060L SH, 9080L, 9080L GE, 9080L H, 9080L SH, 9090L, 9090L GE, 9090L H, 9090L SH, 9090X, 9090X GE, 9090X H, 9090X H H, SB33, SB35, SB36, SB52, SB53, SB54, SB55, SB56, SB58, SB60, SB62, SB64, SB65, VL5060, VL5080, VL5090, VL530, VL540, VL550, VL570, VL600, VL6040, VL6050, VL6060, VL6070, VL6080, VL6090, VL610, VL620, VL630, VL640, VL660, VM3080, VM3080 AL, VM3090, VM340, VM370, VM4090, VM460, VN2090, VN300, VX680, VX7090

REF.570F*

LOCK WASHER n°8

Comp. 920018497

7030M, 7030M H, 8030L, 9040L, 9040M, 9060L, 9060L GE, 9060L H, 9060L SH, 9080L, 9080L GE, 9080L H, 9080L SH, 9090L, 9090L GE, 9090L H, 9090L SH, 9090X, 9090X GE, 9090X H, 9090X H H, SB33, SB35, SB36, SB52, SB53, SB54, SB55, SB56, SB58, SB60, SB62, SB64, SB65, VL5060, VL5080, VL5090, VL530, VL540, VL550, VL570, VL600, VL6040, VL6050, VL6060, VL6070, VL6080, VL6090, VL610, VL620, VL630, VL640, VL660, VM3080, VM3080 AL, VM3090, VM340, VM370, VM4090, VM460, VN2090, VN300, VX680, VX7090

REF.570G*

BEARING SUPPORT n°16

Comp. 944028987

7030M, 7030M H, 8030L, 9040L, 9040M, 9060L, 9060L GE, 9060L H, 9060L SH, 9080L, 9080L GE, 9080L H, 9080L SH, 9090L, 9090L GE, 9090L H, 9090L SH, 9090X, 9090X GE, 9090X H, 9090X H H, VL5060, VL5080, VL5090, VL530, VL540, VL550, VL570, VL600, VL6040, VL6050, VL6060, VL6070, VL6080, VL6090, VL610, VL620, VL630, VL640, VL660, VM3080, VM3080 AL, VM3090, VM340, VM370, VM4090, VM460, VN2090, VN300, VX680, VX7090

REF.570H*

PLUG WASHER n°14

Comp. 944007708

9040L, 9040M, 9060L, 9060L GE, 9060L H, 9060L SH, 9080L, 9080L GE, 9080L H, 9080L SH, 9090L, 9090L GE, 9090L H, 9090L SH, 9090X, 9090X GE, 9090X H, 9090X H H, SB33, SB35, SB36, SB52, SB53, SB54, SB55, SB56, SB58, SB60, SB62, SB64, SB65, VL5060, VL5080, VL5090, VL530, VL540, VL550, VL570, VL600, VL6040, VL6050, VL6060, VL6070, VL6080, VL6090, VL610, VL620, VL630, VL640, VL660, VM3080, VM3080 AL, VM3090, VM340, VM370, VM4090, VM460, VN2090, VN300, VX680, VX7090

REF.570J*

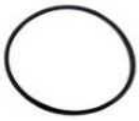

O-RING n°9

Comp. 920018498

7030M, 7030M H, 8030L, 9040L, 9040M, 9060L, 9060L GE, 9060L H, 9060L SH, 9080L, 9080L GE, 9080L H, 9080L SH, 9090L, 9090L GE, 9090L H, 9090L SH, 9090X, 9090X GE, 9090X H, 9090X H H, SB33, SB35, SB36, SB52, SB53, SB54, SB55, SB56, SB58, SB60, SB62, SB64, SB65, VL5060, VL5080, VL5090, VL530, VL540, VL550, VL570, VL600, VL6040, VL6050, VL6060, VL6070, VL6080, VL6090, VL610, VL620, VL630, VL640, VL660, VM3080, VM3080 AL, VM3090, VM340, VM370, VM4090, VM460, VN2090, VN300, VX680, VX7090

REF.570K*

RETAINING WASHER n°10

Comp. 920018499

7030M, 7030M H, 8030L, 9040L, 9040M, 9060L, 9060L GE, 9060L H, 9060L SH, 9080L, 9080L GE, 9080L H, 9080L SH, 9090L, 9090L GE, 9090L H, 9090L SH, 9090X, 9090X GE, 9090X H, 9090X H H, SB33, SB35, SB36, SB52, SB53, SB54, SB55, SB56, SB58, SB60, SB62, SB64, SB65, VL5060, VL5080, VL5090, VL530, VL540, VL550, VL570, VL600, VL6040, VL6050, VL6060, VL6070, VL6080, VL6090, VL610, VL620, VL630, VL640, VL660, VM3080, VM3080 AL, VM3090, VM340, VM370, VM4090, VM460, VN2090, VN300, VX680, VX7090

REF.570N

COLUMN BEARING Ø60x110x28 OSCILLATING 2 SPHERICAL ROWS

Comp. 47499485 (428162)

7030M, 7030M H, 8030L, 9040L, 9040M, 9060L, 9060L GE, 9060L H, 9060L SH, 9080L, 9080L GE, 9080L H, 9080L SH, 9090L, 9090L GE, 9090L H, 9090L SH, 9090X, 9090X GE, 9090X H, 9090X H H,

REF.570P

COLUMN BEARING Ø40x80x23 OSCILLATING 2 SPHERICAL ROWS

Comp. 87516228

7030M, 7030M H, 8030L, 9040L, 9040M, 9060L, 9060L GE, 9060L H, 9060L SH, 9080L, 9080L GE, 9080L H, 9080L SH, 9090L, 9090L GE, 9090L H, 9090L SH, 9090X, 9090X GE, 9090X H, 9090X H H,

REF.730A

BLUE PAINTING (0,4L SPRAY)

Comp. 9973524/73332825

7030L, 7030M, 8030L, 9040L, 9040M, 9050L H, 9050L L, 9050L SH, 9060L, 9060L GE, 9060L H, 9060L SH, 9070L H, 9070L L, 9070L SH, 9080L, 9080L GE, 9080L H, 9080L SH, 9080N H, 9080N L, 9090L, 9090L GE, 9090L H, 9090L H T4, 9090L SH, 9090L SH T4, 9090X, 9090X GE, 9090X GE T4, 9090X H, 9090X H T4, 9090X O, 9090X O GE, 9090X O GE T4, 9090X O T4, 9090X T4, VX7090

REF.730B

DARK GRAY PAINT (0,4L SPRAY)

Comp. 9973528

7030L, 7030M, 9050L SH, 9060L, 9060L GE, 9060L H, 9060L SH, 9070L H, 9070L L, 9070L SH, 9080L, 9080L GE, 9080L H, 9080L SH, 9080N H, 9080N L, 9090L, 9090L GE, 9090L H, 9090L SH, 9090L SH T4, 9090X, 9090X GE, 9090X GE T4, 9090X H, 9090X H T4, 9090X O, 9090X O GE, 9090X O GE T4, 9090X O T4, 9090X T4, VX7090

REF.731A

SILENT BLOCK 2 CAP SCREW

Comp. 920094153

1214, 1620, 1620S, 2414, 2420, 2514, 2520, 2614, 2620, 2714, 2720, 9090X O, 9090X O GE, 9090X O GE T3, 9090X O GE T4, 9090X O GE T5, 9090X O H T4, 9090X O T3, 9090X O T4, 9090X O T5, 9090X OP, 9090X OP GE, SB33, SB35, SB52, SB53, SB54, SB55, T140, T240, VL5060, VL5080, VL5090, VL530, VL540, VL550, VL570, VM3080, VM3080 AL, VM3090, VM340, VM370, VN2090, VN300, VX7090

REF.731B

SILENT BLOCK 1 CAP SCREW

Comp. 920018565

9040L, 9040M, 9050L H, 9050L L, 9060L, 9060L GE, 9060L H, 9060L SH, 9070L H, 9070L L, 9070L L T5, 9070M, 9070N H T5, 9070N L, 9070N L T5, 9070 , 9080L, 9080L GE, 9080L H, 9080L SH, 9080N H, 9080N L, 9090L, 9090L GE, 9090L H, 9090L H T4, 9090L H T5, 9090L SH, 9090L T3, 9090X, 9090X GE, 9090X H, 9090X H H, 9090X H T4, 9090X O, 9090X O GE, 9090X O GE T3, 9090X O GE T4, 9090X O GE T5, 9090X O H T4, 9090X O T3, 9090X O T4, 9090X O T5, 9090X OP, 9090X OP GE, 9090X T3, 9090X T4, 9090X T5, SB36, SB56, SB58, SB60, SB62, SB64, SB65, VL5060, VL5080, VL5090, VL530, VL540, VL550, VL570, VL600, VL6040, VL6050, VL6060, VL6070, VL6080, VL6090, VL610, VL620, VL630, VL640, VL660, VM3080, VM3080 AL, VM3090, VM340, VM370, VM4090, VM460, VN2080, VN2090, VN260, VN300, VX680, VX7090

REF.557A

SINFIN REDUCER

Comp. 84248099

SB,VL,9000

All trademarks belong to their respective owners and their use is for informational purposes only.

VAT not included

Check Ref. Before.

WWW.EDUARDOREPUESTOSAGRICOLAS.COM

Free EU transport on orders 600€

NEW HOLLAND-BRAUD
COMPATIBLE

EDUARDO

1620
2000, 7000L, 7000 M, 8000L,
9000L, 9000M, 9000X
SD, VL, VM, VN, VX

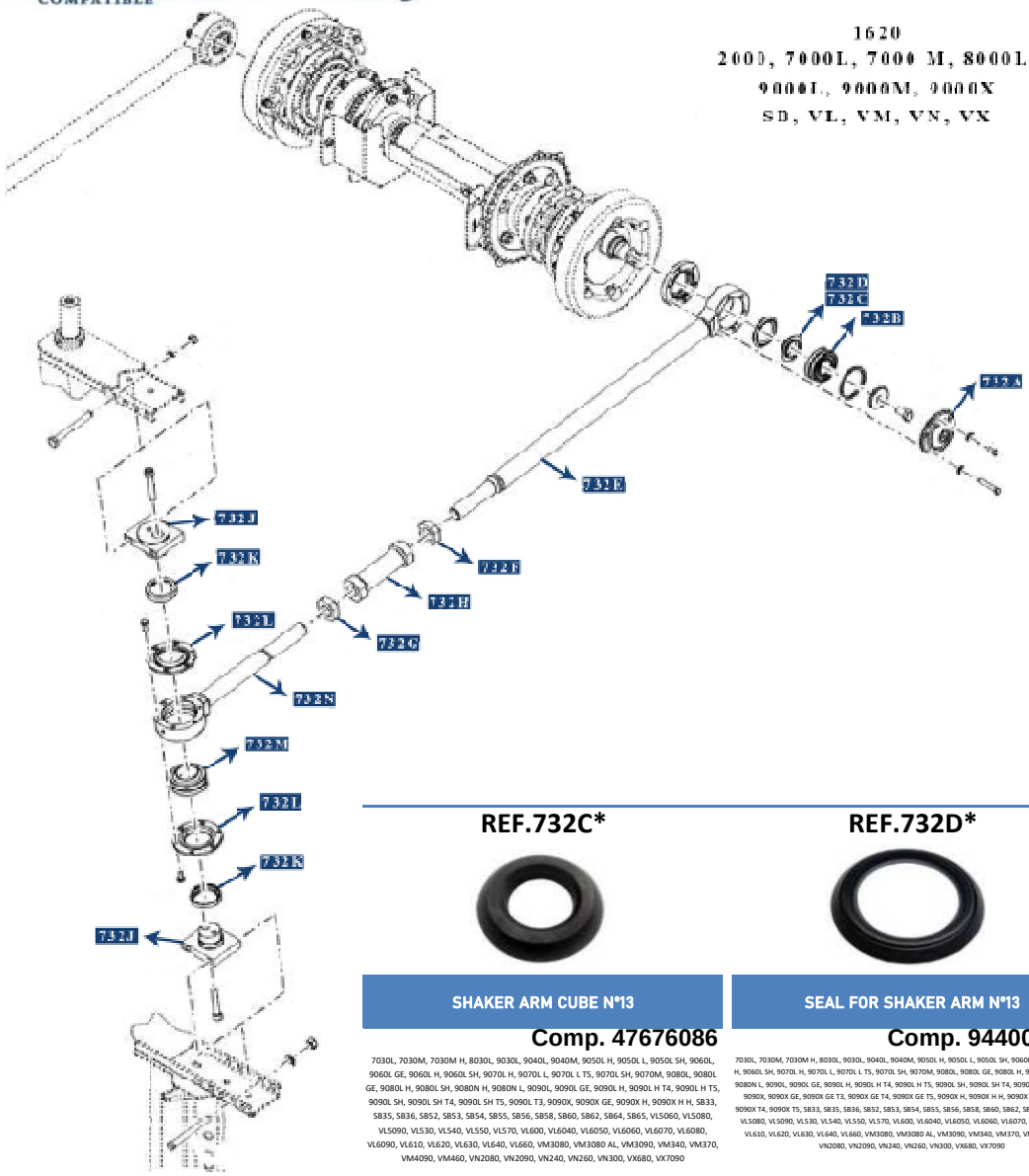

REF.732A*

FLANGE PLUG N°20

Comp. 944000002

1620, 1620S, 2420, 2520, 2620, 2720, 7030L, 7030M, 7030M H, 8030L, 9030L, 9040L, 9040M, 9050L H, 9050L L, 9050L SH, 9060L, 9060L GE, 9060L H, 9060L SH, 9070L H, 9070L L, 9070L L T5, 9070L SH, 9070M, 9080L, 9080L GE, 9080L H, 9080L SH, 9090L, 9090L GE, 9090L H, 9090L H T4, 9090L H T5, 9090L SH, 9090L SH T4, 9090L SH T5, 9090L T3, 9090X, 9090X GE, 9090X GE T3, 9090X GE T4, 9090X GE T5, 9090X H, 9090X H H, 9090X H T4, 9090X T3, 9090X T4, 9090X T5, SB33, SB35, SB36, SB52, SB53, SB54, SB55, SB56, SB58, SB60, SB62, SB64, SB65, VL5060, VL5080, VL5090, VL530, VL540, VL550, VL570, VL600, VL6040, VL6050, VL6060, VL6070, VL6080, VL6090, VL610, VL620, VL630, VL640, VL660, VM3080, VM3080 AL, VM3090, VM340, VM370, VM4090, VM460, VN2080, VN2090, VN240, VN260, VN300, VX680, VX7090

REF.732B

BEARING ARM BEARING N°6

Comp. 26796210

1620, 1620S, 2420, 2520, 2620, 2720, 7030L, 7030M, 7030M H, 8030L, 9030L, 9040L, 9040M, 9050L H, 9050L L, 9050L SH, 9060L, 9060L GE, 9060L H, 9060L SH, 9070L H, 9070L L, 9070L L T5, 9070L SH, 9070M, 9080L, 9080L GE, 9080L H, 9080L SH, 9080N H, 9080N L, 9090L, 9090L GE, 9090L H, 9090L H T4, 9090L H T5, 9090L SH, 9090L SH T4, 9090L SH T5, 9090L T3, 9090X, 9090X GE, 9090X H, 9090X H H, SB33, SB35, SB36, SB52, SB53, SB54, SB55, SB56, SB58, SB60, SB62, SB64, SB65, VL5060, VL5080, VL5090, VL530, VL540, VL550, VL570, VL600, VL6040, VL6050, VL6060, VL6070, VL6080, VL6090, VL610, VL620, VL630, VL640, VL660, VM3080, VM3080 AL, VM3090, VM340, VM370, VM4090, VM460, VN2080, VN2090, VN240, VN260, VN300, VX680, VX7090

REF.732C*

SHAKER ARM CUBE N°13

Comp. 47676086

7030L, 7030M, 7030M H, 8030L, 9030L, 9040L, 9040M, 9050L H, 9050L L, 9050L SH, 9060L, 9060L GE, 9060L H, 9060L SH, 9070L H, 9070L L, 9070L L T5, 9070L SH, 9070M, 9080L, 9080L GE, 9080L H, 9080L SH, 9080N H, 9080N L, 9090L, 9090L GE, 9090L H, 9090L H T4, 9090L H T5, 9090L SH, 9090L SH T4, 9090L SH T5, 9090L T3, 9090X, 9090X GE, 9090X GE T3, 9090X GE T4, 9090X GE T5, 9090X H, 9090X H H, SB33, SB35, SB36, SB52, SB53, SB54, SB55, SB56, SB58, SB60, SB62, SB64, SB65, VL5060, VL5080, VL5090, VL530, VL540, VL550, VL570, VL600, VL6040, VL6050, VL6060, VL6070, VL6080, VL6090, VL610, VL620, VL630, VL640, VL660, VM3080, VM3080 AL, VM3090, VM340, VM370, VM4090, VM460, VN2080, VN2090, VN240, VN260, VN300, VX680, VX7090

REF.732D*

SEAL FOR SHAKER ARM N°13

Comp. 944007716

7030L, 7030M, 7030M H, 8030L, 9030L, 9040L, 9040M, 9050L H, 9050L L, 9050L SH, 9060L, 9060L GE, 9060L H, 9060L SH, 9070L H, 9070L L, 9070L L T5, 9070L SH, 9070M, 9080L, 9080L GE, 9080L H, 9080L SH, 9080N H, 9080N L, 9090L, 9090L GE, 9090L H, 9090L H T4, 9090L H T5, 9090L SH, 9090L SH T4, 9090L SH T5, 9090L T3, 9090X, 9090X GE, 9090X GE T3, 9090X GE T4, 9090X GE T5, 9090X H, 9090X H H, 9090X H T4, 9090X T3, 9090X T4, 9090X T5, SB33, SB35, SB36, SB52, SB53, SB54, SB55, SB56, SB58, SB60, SB62, SB64, SB65, VL5060, VL5080, VL5090, VL530, VL540, VL550, VL570, VL600, VL6040, VL6050, VL6060, VL6070, VL6080, VL6090, VL610, VL620, VL630, VL640, VL660, VM3080, VM3080 AL, VM3090, VM340, VM370, VM4090, VM460, VN2080, VN2090, VN240, VN260, VN300, VX680, VX7090

REF.732E*

LINK ROD N°12

Comp. 944000056

1620, 1620S, 2420, 2520, 2620, 2720, 7030L, 7030M, 7030M H, 8030L, 9030L, 9040L, 9040M, 9050L L, 9050L SH, 9060L, 9060L GE, 9060L H, 9060L SH, 9070L L, 9070L L T5, 9070L SH, 9070M, 9080L, 9080L GE, 9080L H, 9080L SH, 9090L, 9090L GE, 9090L H, 9090L SH, 9090L SH T4, 9090L SH T5, 9090L T3, SB33, SB35, SB36, SB52, SB53, SB54, SB55, SB56, SB58, SB60, SB62, SB64, VL5060, VL5080, VL5090, VL530, VL540, VL550, VL570, VL600, VL6040, VL6050, VL6060, VL6070, VL6080, VL6090, VL610, VL620, VL630, VL640, VL660, VM3080, VM3080 AL, VM3090, VM340, VM370, VM4090, VM460, VN2090, VN300

REF.732F*

THIN NUT N°19

Comp. 920008858

1214, 1620, 1620S, 2420, 2520, 2620, 2720, 7030L, 7030M, 7030M H, 8030L, 9030L, 9040L, 9040M, 9050L H, 9050L L, 9050L SH, 9060L, 9060L GE, 9060L H, 9060L SH, 9070L H, 9070L L, 9070L L T5, 9070L SH, 9070M, 9070N L, 9080L, 9080L GE, 9080L H, 9080L SH, 9080N H, 9080N L, 9090L, 9090L GE, 9090L H, 9090L H T4, 9090L H T5, 9090L SH, 9090L SH T4, 9090L SH T5, 9090L T3, SB33, SB35, SB36, SB52, SB53, SB54, SB55, SB56, SB58, SB60, SB62, SB64, VL5060, VL5080, VL5090, VL530, VL540, VL550, VL570, VL600, VL6040, VL6050, VL6060, VL6070, VL6080, VL6090, VL610, VL620, VL630, VL640, VL660, VM3080, VM3080 AL, VM3090, VM340, VM370, VM4090, VM460, VN2080, VN2090, VN240, VN260, VN300

REF.732G*

THIN NUT N°18

Comp. 707704968

1620, 1620S, 2420, 2520, 2620, 2720, 7030L, 7030M, 7030M H, 8030L, 9030L, 9040L, 9040M, 9050L H, 9050L L, 9050L SH, 9060L, 9060L GE, 9060L H, 9060L SH, 9070L H, 9070L L, 9070L L T5, 9070L SH, 9070M, 9070N L, 9080L, 9080L GE, 9080L H, 9080L SH, 9080N H, 9080N L, 9090L, 9090L GE, 9090L H, 9090L H T4, 9090L H T5, 9090L SH, 9090L SH T4, 9090L SH T5, 9090L T3, SB33, SB35, SB36, SB52, SB53, SB54, SB55, SB56, SB58, SB60, SB62, SB64, VL5060, VL5080, VL5090, VL530, VL540, VL550, VL570, VL600, VL6040, VL6050, VL6060, VL6070, VL6080, VL6090, VL610, VL620, VL630, VL640, VL660, VM3080, VM3080 AL, VM3090, VM340, VM370, VM4090, VM460, VN2080, VN2090, VN240, VN260, VN300

REF.732H*

ADJUSTMENT HOSE N°23

Comp. 944002335

1214, 1620, 1620S, 2420, 2520, 2620, 2720, 7030L, 7030M, 7030M H, 8030L, 9030L, 9040L, 9040M, 9050L H, 9050L L, 9050L SH, 9060L, 9060L GE, 9060L H, 9060L SH, 9070L H, 9070L L, 9070L L T5, 9070L SH, 9070M, 9070N L, 9080L, 9080L GE, 9080L H, 9080L SH, 9090L, 9090L GE, 9090L H, 9090L H T4, 9090L H T5, 9090L SH, 9090L SH T4, 9090L SH T5, 9090L T3, SB33, SB35, SB36, SB52, SB53, SB54, SB55, SB56, SB58, SB60, SB62, SB64, VL5060, VL5080, VL5090, VL530, VL540, VL550, VL570, VL600, VL6040, VL6050, VL6060, VL6070, VL6080, VL6090, VL610, VL620, VL630, VL640, VL660, VM3080, VM3080 AL, VM3090, VM340, VM370, VM4090, VM460, VN2080, VN2090, VN240, VN260, VN300

REF.732J*

BRACKET ARM SUPPORT N°24

Comp. 944007020

7030L, 7030M, 7030M H, 8030L, 9030L, 9040L, 9040M, 9060L, 9060L GE, 9060L H, 9060L SH, 9080L, 9080L GE, 9080L H, 9080L SH, 9090L, 9090L GE, 9090L H, 9090L SH, SB33, SB35, SB36, SB52, SB53, SB54, SB55, SB56, SB58, SB60, SB62, SB64, SB65, VL5060, VL5080, VL5090, VL530, VL540, VL550, VL570, VL600, VL6040, VL6050, VL6060, VL6070, VL6080, VL6090, VL610, VL620, VL630, VL640, VL660, VM3080, VM3080 AL, VM3090, VM340, VM370, VM4090, VM460

REF.732K*

SHUTTER ARM GASKET KIT N°10

Comp. 944007018

7030L, 7030M, 7030M H, 8030L, 9030L, 9040L, 9040M, 9050L H, 9050L L, 9050L SH, 9060L, 9060L GE, 9060L H, 9060L SH, 9070L H, 9070L L, 9070L L T5, 9070L SH, 9070M, 9080L, 9080L GE, 9080L H, 9080L SH, 9090L, 9090L GE, 9090L H, 9090L H T4, 9090L H T5, 9090L SH, 9090L SH T4, 9090L SH T5, 9090L T3, 9090X, 9090X GE, 9090X GE T3, 9090X GE T4, 9090X GE T5, 9090X H, 9090X H H, 9090X H T4, 9090X T3, 9090X T4, 9090X T5, SB33, SB35, SB36, SB52, SB53, SB54, SB55, SB56, SB58, SB60, SB62, SB64, SB65, VL5060, VL5080, VL5090, VL530, VL540, VL550, VL570, VL600, VL6040, VL6050, VL6060, VL6070, VL6080, VL6090, VL610, VL620, VL630, VL640, VL660, VM3080, VM3080 AL, VM3090, VM340, VM370, VM4090, VM460, VN2090, VN300, VX680, VX7090

REF.732L*

RETAINER ARM SHAKER N°11

Comp. 944007019

7030L, 7030M, 7030M H, 8030L, 9030L, 9040L, 9040M, 9050L H, 9050L L, 9050L SH, 9060L, 9060L GE, 9060L H, 9060L SH, 9070L H, 9070L L, 9070L L T5, 9070L SH, 9070M, 9080L, 9080L GE, 9080L H, 9080L SH, 9090L, 9090L GE, 9090L H, 9090L H T4, 9090L H T5, 9090L SH, 9090L SH T4, 9090L SH T5, 9090L T3, 9090X, 9090X GE, 9090X GE T3, 9090X GE T4, 9090X GE T5, 9090X H, 9090X H H, 9090X H T4, 9090X T3, 9090X T4, 9090X T5, SB33, SB35, SB36, SB52, SB53, SB54, SB55, SB56, SB58, SB60, SB62, SB64, SB65, VL5060, VL5080, VL5090, VL530, VL540, VL550, VL570, VL600, VL6040, VL6050, VL6060, VL6070, VL6080, VL6090, VL610, VL620, VL630, VL640, VL660, VM3080, VM3080 AL, VM3090, VM340, VM370, VM4090, VM460, VN2090, VN300, VX680, VX7090

REF.732M

SHARP ARM ARTICULATION N°8

Comp. 920002308

1620, 1620S, 2420, 2514, 2520, 2620, 2714, 2720, 7030L, 7030M, 7030M H, 8030L, 9030L, 9040L, 9040M, 9050L H, 9050L L, 9050L SH, 9060L, 9060L GE, 9060L H, 9060L SH, 9070L H, 9070L L, 9070L L T5, 9070L SH, 9070M, 9080L, 9080L GE, 9080L H, 9080L SH, 9080N H, 9080N L, 9090L, 9090L GE, 9090L H, 9090L H T4, 9090L H T5, 9090L SH, 9090L SH T4, 9090L SH T5, 9090L T3, 9090X, 9090X GE, 9090X GE T3, 9090X GE T4, 9090X GE T5, 9090X H, 9090X H H, 9090X H T4, 9090X T3, 9090X T4, 9090X T5, SB33, SB35, SB36, SB52, SB53, SB54, SB55, SB56, SB58, SB60, SB62, SB64, SB65, VL5060, VL5080, VL5090, VL530, VL540, VL550, VL570, VL600, VL6040, VL6050, VL6060, VL6070, VL6080, VL6090, VL610, VL620, VL630, VL640, VL660, VM3080, VM3080 AL, VM3090, VM340, VM370, VM4090, VM460, VN2080, VN2090, VN240, VN260, VN300, VX680, VX7090

REF.732N*

LINK ROD N°21

Comp. 944000053

1620, 1620S, 2420, 2520, 2620, 2720, 7030L, 7030M, 7030M H, 8030L, 9030L, 9040L, 9040M, 9050L L, 9050L SH, 9060L, 9060L GE, 9060L H, 9060L SH, 9070L L, 9070L L T5, 9070L SH, 9070M, 9080L, 9080L GE, 9080L H, 9080L SH, 9090L, 9090L GE, 9090L H, 9090L SH, 9090L SH T4, 9090L SH T5, 9090L T3, SB33, SB35, SB36, SB52, SB53, SB54, SB55, SB56, SB58, SB60, SB62, SB64, VL5060, VL5080, VL5090, VL530, VL540, VL550, VL570, VL600, VL6040, VL6050, VL6060, VL6070, VL6080, VL6090, VL610, VL620, VL630, VL640, VL660, VM3080, VM3080 AL, VM3090, VM340, VM370, VM4090, VM460, VN2090, VN300

VAT not included

Free EU transport on orders 600€

All trademarks belong to their respective owners and their use is for informational purposes only.

WWW.EDUARDOREPUESTOSAGRICOLAS.COM

Check Ref. Before.

NEW HOLLAND-BRAUD COMPATIBLE

EDUARDO

REF.501A

RIVETS BASKETS BOX 250 UDS

Comp. 920018082

1214, 1620, 1620S, 2720, 7030L, 7030M, 7030M H, 8030L, 9030L, 9040L, 9040M, 9050L H, 9050L L, 9050L SH, 9060L, 9060L GE, 9060L H, 9060L SH, 9070L H, 9070L L, 9070L L TS, 9070L SH, 9070M, 9080L, 9080L GE, 9080L H, 9080L SH, 9080N H, 9080N L, 9090L, 9090L GE, 9090L H, 9090L H T4, 9090L H TS, 9090L SH, 9090L SH T4, 9090L SH TS, 9090L T3, 9090X, 9090X GE, 9090X GE T3, 9090X GE T4, 9090X GE TS, 9090X H, 9090X H H, 9090X H T4, 9090X O, 9090X O GE, 9090X O GE T3, 9090X O GE T4, 9090X O GE TS, 9090X O H T4, 9090X O T3, 9090X O T4, 9090X O TS, 9090X OP, 9090X OP GE, 9090X T3, 9090X T4, 9090X TS, LM625, SB33, SB35, SB36, SB52, SB53, SB54, SB55, SB56, SB58, SB60, SB62, SB64, SB65, VL5060, VL5080, VL5090, VL530, VL540, VL550, VL570, VL600, VL6040, VL6050, VL6060, VL6070, VL6080, VL6090, VL610, VL620, VL630, VL640, VL660, VM3080, VM3080 AL, VM3090, VM340, VM370, VM4090, VM460, VN2080, VN2090, VN240, VN260, VN300, VX680, VX7090

REF.502A

SCREW-NUT self-locking UNION BASKETS M4-15MM

Comp. -

1214, 1620, 1620S, 2414, 2420, 2514, 2520, 2614, 2620, 2714, 2720, 7030L, 7030M, 7030M H, 8030L, 9030L, 9040L, 9040M, 9050L H, 9050L L, 9050L SH, 9060L, 9060L GE, 9060L H, 9060L SH, 9070L H, 9070L L, 9070L L TS, 9070L SH, 9070M, 9080L, 9080L GE, 9080L H, 9080L SH, 9080N H, 9080N L, 9090L, 9090L GE, 9090L H, 9090L H T4, 9090L H TS, 9090L SH, 9090L SH T4, 9090L SH TS, 9090L T3, 9090X, 9090X GE, 9090X GE T3, 9090X GE T4, 9090X GE TS, 9090X H, 9090X H H, 9090X H T4, 9090X O, 9090X O GE, 9090X O GE T3, 9090X O GE T4, 9090X O GE TS, 9090X O H T4, 9090X O T3, 9090X O T4, 9090X O TS, 9090X OP, 9090X OP GE, 9090X T3, 9090X T4, 9090X TS, 5833, SB35, SB36, SB52, SB53, SB54, SB55, SB56, SB58, SB60, SB62, SB64, SB65, VL5060, VL5080, VL5090, VL530, VL540, VL550, VL570, VL600, VL6040, VL6050, VL6060, VL6070, VL6080, VL6090, VL610, VL620, VL630, VL640, VL660, VM3080, VM3080 AL, VM3090, VM340, VM370, VM4090, VM460, VN2080, VN2090, VN240, VN260, VN300, VX680, VX7090

REF.503A

SCREW M8x50- SPLIT NUT -WASHER

Comp. 700051333,920019493,11194079

1214, 1620, 1620S, 2414, 2420, 2514, 2520, 2614, 2620, 2714, 2720, 7030L, 7030M, 7030M H, 8030L, 9030L, 9040L, 9040M, 9050L H, 9050L L, 9050L SH, 9060L, 9060L GE, 9060L H, 9060L SH, 9070L H, 9070L L, 9070L L TS, 9070L SH, 9070M, 9080L, 9080L GE, 9080L H, 9080L SH, 9080N H, 9080N L, 9090L, 9090L GE, 9090L H, 9090L H T4, 9090L H TS, 9090L SH, 9090L SH T4, 9090L SH TS, 9090L T3, 9090X, 9090X GE, 9090X GE T3, 9090X GE T4, 9090X GE TS, 9090X H, 9090X H H, 9090X H T4, 9090X O, 9090X O GE, 9090X O GE T3, 9090X O GE T4, 9090X O GE TS, 9090X O H T4, 9090X O T3, 9090X O T4, 9090X O TS, 9090X OP, 9090X OP GE, 9090X T3, 9090X T4, 9090X TS, 5833, SB35, SB36, SB52, SB53, SB54, SB55, SB56, SB58, SB60, SB62, SB64, SB65, VL5060, VL5080, VL5090, VL530, VL540, VL550, VL570, VL600, VL6040, VL6050, VL6060, VL6070, VL6080, VL6090, VL610, VL620, VL630, VL640, VL660, VM3080, VM3080 AL, VM3090, VM340, VM370, VM4090, VM460, VN2080, VN2090, VN240, VN260, VN300, VX680, VX7090,0,28,2,19

REF.503B

SCREW M8x50

Comp. 700051333

1620, 1620S, 2720, 4880, 7030L, 7030M, 7030M H, 8030L, 9030L, 9040L, 9040M, 9050L H, 9050L L, 9050L SH, 9060L, 9060L GE, 9060L H, 9060L SH, 9070L H, 9070L L, 9070L L TS, 9070L SH, 9070M, 9080L, 9080L GE, 9080L H, 9080L SH, 9090L, 9090L GE, 9090L H, 9090L H T4, 9090L H TS, 9090L SH, 9090L SH T4, 9090L SH TS, 9090L T3, 9090X, 9090X GE, 9090X GE T3, 9090X GE T4, 9090X GE TS, 9090X H, 9090X H H, 9090X H T4, 9090X O, 9090X O GE, 9090X O GE T3, 9090X O GE T4, 9090X O GE TS, 9090X O H T4, 9090X O T3, 9090X O T4, 9090X O TS, 9090X OP, 9090X OP GE, 9090X T3, 9090X T4, 9090X TS, 5833, SB35, SB36, SB52, SB53, SB54, SB55, SB56, SB58, SB60, SB62, SB64, SB65, VL5060, VL5080, VL5090, VL530, VL540, VL550, VL570, VL600, VL6040, VL6050, VL6060, VL6070, VL6080, VL6090, VL610, VL620, VL630, VL640, VL660, VM3080, VM3080 AL, VM3090, VM340, VM370, VM4090, VM460, VN2080, VN2090, VN240, VN260, VN300, VX680, VX7090

REF.504B

SCREW -M10X70+ SPLIT NUT (12.9 galvanized)

Comp. 1107674, 92001949

1620, 1620S, 2720, 4880, 7030L, 7030M, 7030M H, 8030L, 9030L, 9040L, 9040M, 9050L H, 9050L L, 9050L SH, 9060L, 9060L GE, 9060L H, 9060L SH, 9070L H, 9070L L, 9070L L TS, 9070L SH, 9070M, 9080L, 9080L GE, 9080L H, 9080L SH, 9090L, 9090L GE, 9090L H, 9090L H T4, 9090L H TS, 9090L SH, 9090L SH T4, 9090L SH TS, 9090L T3, 9090X, 9090X GE, 9090X GE T3, 9090X GE T4, 9090X GE TS, 9090X H, 9090X H H, 9090X H T4, 9090X O, 9090X O GE, 9090X O GE T3, 9090X O GE T4, 9090X O GE TS, 9090X O H T4, 9090X O T3, 9090X O T4, 9090X O TS, 9090X OP, 9090X OP GE, 9090X T3, 9090X T4, 9090X TS, 5833, SB35, SB36, SB52, SB53, SB54, SB55, SB56, SB58, SB60, SB62, SB64, SB65, VL5060, VL5080, VL5090, VL530, VL540, VL550, VL570, VL600, VL6040, VL6050, VL6060, VL6070, VL6080, VL6090, VL610, VL620, VL630, VL640, VL660, VM3080, VM3080 AL, VM3090, VM340, VM370, VM4090, VM460, VN2080, VN2090, VN240, VN260, VN300, VX680, VX7090,3,03

REF.504C

SCREW -M10X70 FRONT TIE DOWN SHAKERS 12.9 Zn

Comp. 1107674

1620, 1620S, 4600, 7030L, 7030M, 7030M H, 8030L, 9030L, 9040L, 9040M, 9050L H, 9050L L, 9050L SH, 9060L, 9060L GE, 9060L H, 9060L SH, 9070L H, 9070L L, 9070L L TS, 9070L SH, 9070M, 9080L, 9080L GE, 9080L H, 9080L SH, 9090L, 9090L GE, 9090L H, 9090L H T4, 9090L H TS, 9090L SH, 9090L SH T4, 9090L SH TS, 9090L T3, 9090X, 9090X GE, 9090X GE T3, 9090X GE T4, 9090X GE TS, 9090X H, 9090X H H, 9090X H T4, 9090X O, 9090X O GE, 9090X O GE T3, 9090X O GE T4, 9090X O GE TS, 9090X O H T4, 9090X O T3, 9090X O T4, 9090X O TS, 9090X OP, 9090X OP GE, 9090X T3, 9090X T4, 9090X TS, 5833, SB35, SB36, SB52, SB53, SB54, SB55, SB56, SB58, SB60, SB62, SB64, SB65, VL5060, VL5080, VL5090, VL530, VL540, VL550, VL570, VL600, VL6040, VL6050, VL6060, VL6070, VL6080, VL6090, VL610, VL620, VL630, VL640, VL660, VM3080, VM3080 AL, VM3090, VM340, VM370, VM4090, VM460, VN2080, VN2090, VN240, VN260, VN300, VX680, VX7090 - VENDIMIADORA (01/07 - 12/12)

REF.504D

SCREW -M10X75 REAR MOORING ROD 12.9 Zn

Comp. 11107774

7030L, 7030M, 7030M H, 8030L, 9030L, 9040L, 9040M, 9050L H, 9050L L, 9050L SH, 9060L, 9060L GE, 9060L H, 9060L SH, 9070L H, 9070L L, 9070L L TS, 9070L SH, 9070M, 9080L, 9080L GE, 9080L H, 9080L SH, 9090L, 9090L GE, 9090L H, 9090L H T4, 9090L H TS, 9090L SH, 9090L SH T4, 9090L SH TS, 9090L T3, 9090X, 9090X GE, 9090X GE T3, 9090X GE T4, 9090X GE TS, 9090X H, 9090X H H, 9090X H T4, 9090X O, 9090X O GE, 9090X O GE T3, 9090X O GE T4, 9090X O GE TS, 9090X O H T4, 9090X O T3, 9090X O T4, 9090X O TS, 9090X OP, 9090X OP GE, 9090X T3, 9090X T4, 9090X TS, 5833, SB35, SB36, SB53, SB55, SB56, SB58, SB60, SB62, SB64, SB65, VL5060, VL5080, VL5090, VL530, VL540, VL550, VL570, VL600, VL6040, VL6050, VL6060, VL6070, VL6080, VL6090, VL610, VL620, VL630, VL640, VL660, VM3080, VM3080 AL, VM3090, VM340, VM370, VM4090, VM460, VN2090, VN300, VX680, VX7090

REF.504F

SCREW -M10X80 FRONT MOORING SHOCKERS 12.9 Zn

Comp. 11107874

7030L, 7030M, 7030M H, 8030L, 9030L, 9040L, 9040M, 9050L H, 9050L L, 9050L SH, 9060L, 9060L GE, 9060L H, 9060L SH, 9070L H, 9070L L, 9070L L TS, 9070L SH, 9070M, 9080L, 9080L GE, 9080L H, 9080L SH, 9090L, 9090L GE, 9090L H, 9090L H T4, 9090L H TS, 9090L SH, 9090L SH T4, 9090L SH TS, 9090L T3, 9090X, 9090X GE, 9090X GE T3, 9090X GE T4, 9090X GE TS, 9090X H, 9090X H H, 9090X H T4, 9090X O, 9090X O GE, 9090X O GE T3, 9090X O GE T4, 9090X O GE TS, 9090X O H T4, 9090X O T3, 9090X O T4, 9090X O TS, 9090X OP, 9090X OP GE, 9090X T3, 9090X T4, 9090X TS, 5833, SB35, SB36, SB53, SB55, SB56, SB58, SB60, SB62, SB64, SB65, VL5060, VL5080, VL5090, VL530, VL540, VL550, VL570, VL600, VL6040, VL6050, VL6060, VL6070, VL6080, VL6090, VL610, VL620, VL630, VL640, VL660, VM3080, VM3080 AL, VM3090, VM340, VM370, VM4090, VM460, VN2090, VN300, VX680, VX7090,3,08,1,6

REF.504G

SCREW -M10X80+ SPLIT NUT (12.9 galvanized)

Comp. 11107874, 92001949

7030L, 7030M, 7030M H, 8030L, 9030L, 9040L, 9040M, 9050L H, 9050L L, 9050L SH, 9060L, 9060L GE, 9060L H, 9060L SH, 9070L H, 9070L L, 9070L L TS, 9070L SH, 9070M, 9080L, 9080L GE, 9080L H, 9080L SH, 9090L, 9090L GE, 9090L H, 9090L H T4, 9090L H TS, 9090L SH, 9090L SH T4, 9090L SH TS, 9090L T3, 9090X, 9090X GE, 9090X GE T3, 9090X GE T4, 9090X GE TS, 9090X H, 9090X H H, 9090X H T4, 9090X O, 9090X O GE, 9090X O GE T3, 9090X O GE T4, 9090X O GE TS, 9090X O H T4, 9090X O T3, 9090X O T4, 9090X O TS, 9090X OP, 9090X OP GE, 9090X T3, 9090X T4, 9090X TS, 5833, SB35, SB36, SB53, SB55, SB56, SB58, SB60, SB62, SB64, SB65, VL5060, VL5080, VL5090, VL530, VL540, VL550, VL570, VL600, VL6040, VL6050, VL6060, VL6070, VL6080, VL6090, VL610, VL620, VL630, VL640, VL660, VM3080, VM3080 AL, VM3090, VM340, VM370, VM4090, VM460, VN2080, VN2090, VN240, VN260, VN300, VX680, VX7090,3,08,1,6,3,14

REF.504E

SCREW -M10X75 + SPLIT NUT (12.9 galvanized)

Comp. 11107774, 92001949

7030L, 7030M, 7030M H, 8030L, 9030L, 9040L, 9040M, 9050L H, 9050L L, 9050L SH, 9060L, 9060L GE, 9060L H, 9060L SH, 9070L H, 9070L L, 9070L L TS, 9070L SH, 9070M, 9080L, 9080L GE, 9080L H, 9080L SH, 9090L, 9090L GE, 9090L H, 9090L H T4, 9090L H TS, 9090L SH, 9090L SH T4, 9090L SH TS, 9090L T3, 9090X, 9090X GE, 9090X GE T3, 9090X GE T4, 9090X GE TS, 9090X H, 9090X H H, 9090X H T4, 9090X O, 9090X O GE, 9090X O GE T3, 9090X O GE T4, 9090X O GE TS, 9090X O H T4, 9090X O T3, 9090X O T4, 9090X O TS, 9090X OP, 9090X OP GE, 9090X T3, 9090X T4, 9090X TS, 5833, SB35, SB36, SB52, SB53, SB54, SB55, SB56, SB58, SB60, SB62, SB64, SB65, VL5060, VL5080, VL5090, VL530, VL540, VL550, VL570, VL600, VL6040, VL6050, VL6060, VL6070, VL6080, VL6090, VL610, VL620, VL630, VL640, VL660, VM3080, VM3080 AL, VM3090, VM340, VM370, VM4090, VM460, VN2090, VN300, VX680, VX7090,3,08

REF.505B

SCREW M10X70-SPLIT NUT -WASHERS

Comp. 11107674,944008815,11198479,920019491

1620, 1620S, 4600, 7030L, 7030M, 7030M H, 8030L, 9030L, 9040L, 9040M, 9050L H, 9050L L, 9050L SH, 9060L, 9060L GE, 9060L H, 9060L SH, 9070L H, 9070L L, 9070L L TS, 9070L SH, 9070M, 9080L, 9080L GE, 9080L H, 9080L SH, 9090L, 9090L GE, 9090L H, 9090L H T4, 9090L H TS, 9090L SH, 9090L SH T4, 9090L SH TS, 9090L T3, 9090X, 9090X GE, 9090X GE T3, 9090X GE T4, 9090X GE TS, 9090X H, 9090X H H, 9090X H T4, 9090X O H T4, 9090X T3, 9090X T4, 9090X TS, 5833, SB35, SB36, SB52, SB53, SB54, SB55, SB56, SB58, SB60, SB62, SB64, SB65, VL5060, VL5080, VL5090, VL530, VL540, VL550, VL570, VL600, VL6040, VL6050, VL6060, VL6070, VL6080, VL6090, VL610, VL620, VL630, VL640, VL660, VM3080, VM3080 AL, VM3090, VM340, VM370, VM4090, VM460, VN2090, VN240, VN260, VN300, VX680, VX7090 - VENDIMIADORA (01/07 - 12/12)

REF.506A

CLOSING WASHER

Comp. 70770628,920009501

1620, 1620S, 7030L, 7030M, 7030M H, 8030L, 9030L, 9040L, 9040M, 9050L H, 9050L L, 9050L SH, 9060L, 9060L GE, 9060L H, 9060L SH, 9070L H, 9070L L, 9070L L TS, 9070L SH, 9070M, 9080L, 9080L GE, 9080L H, 9080L SH, 9090L, 9090L GE, 9090L H, 9090L H T4, 9090L H TS, 9090L SH, 9090L SH T4, 9090L SH TS, 9090L T3, 9090X, 9090X GE, 9090X GE T3, 9090X GE T4, 9090X GE TS, 9090X H, 9090X H H, 9090X H T4, 9090X O H T4, 9090X T3, 9090X T4, 9090X TS, 5833, SB35, SB36, SB52, SB53, SB54, SB55, SB56, SB58, SB60, SB62, SB64, SB65, VL5060, VL5080, VL5090, VL530, VL540, VL550, VL570, VL600, VL6040, VL6050, VL6060, VL6070, VL6080, VL6090, VL610, VL620, VL630, VL640, VL660, VM3080, VM3090, VM340, VM370, VM4090, VM460, VN2080, VN2090, VN240, VN260, VN300, VX680, VX7090

REF.507A

SCREW - KIT PLATE M10-40mm

Comp. 70770628,920009501

REF.507B

SCREW - NUT - WASHER M8-25mm

Comp. -

REF.509A

TRANSMISSION SENSOR diameter 12 NPN. (SB)

Comp. 920019073

SB36, SB56, SB58, SB60, SB62, SB64, SB65

REF.509B

TRANSMISSION SENSOR diameter12 PNP.(SB,VL,VX)

Comp. 920018843

SB33, SB35, SB36, SB53, SB55, SB56, SB58, SB60, SB62, SB64, SB65, TB10, TB15, VL5060, VL5080, VL5090, VL600, VL6040, VL6050, VL6060, VL6070, VL6080, VL6090, VL610, VL620, VL630, VL640, VL660, VM3080, VM3080 AL, VM3090, VM4090, VM460, VN2080, VN2090, VN240, VN260, VX680, VX7090

REF.509C

SWITCHING CAP SWITCH diameter 18(9000L,VL,VX)

Comp. 920019770

9060L GE, 9080L GE, 9090L GE, SB33, SB35, SB53, SB55, VL5060, VL5080, VL5090, VL530, VL540, VL550, VL570, VL600, VL6040, VL6050, VL6060, VL6070, VL6080, VL6090, VL610, VL620, VL630, VL640, VL660, VM3080, VM3080 AL, VM3090, VM340, VM370, VM4090, VM460, VN2080, VN2090, VN300, VX680, VX7090

REF.509D

EXTRACTOR SENSOR (VL,VX)

Comp. 87644844

9080N H, 9080N L, SB33, SB35, SB36, SB53, SB55, SB56, SB58, SB60, SB62, SB64, VL5060, VL5080, VL5090, VL530, VL540, VL550, VL570, VL600, VL6040, VL6050, VL6060, VL6070, VL6080, VL6090, VL610, VL620, VL630, VL640, VL660, VM3080, VM3080 AL, VM3090, VM340, VM370, VM4090, VM460, VN2080, VN2090, VN300, VX680, VX7090

REF.509F

SENSOR diameter18 PNP. (SB,VL,VM,VN,VX,9000)

Comp. 920018842

1620S, 2420, 2520, 2620, 2720, 9040L, 9040M, 9060L, 9060L GE, 9060L H, 9060L SH, 9080L, 9080L GE, 9080L H, 9080L SH, 9090L, 9090L GE, 9090L H, 9090L SH, 9090X, 9090X GE, 9090X H, 9090X OP, 9090X OP GE, SB33, SB35, SB36, SB52, SB53, SB54, SB55, SB56, SB58, SB60, SB62, SB64, SB65, TB10, TB15, VL5060, VL5080, VL5090, VL600, VL6040, VL6050, VL6060, VL6070, VL6080, VL6090, VL610, VL620, VL630, VL640, VL660, VM3080, VM3080 AL, VM3090, VM4090, VM460, VN2080, VN2090, VN240, VN260, VX680, VX7090

REF.509G

SENSOR

Comp. 87342073

8030L, 9030L, 9040L, 9040M, 9050L H, 9050L L, 9050L SH, 9060L, 9060L GE, 9060L H, 9060L SH, 9070L H, 9070L L, 9070L L TS, 9070L SH, 9070M, 9070N H TS, 9070N L, 9070N L TS, 9070, 9080L, 9080L GE, 9080L H, 9080L SH, 9080N H, 9080N L, 9090L, 9090L GE, 9090L H, 9090L H T4, 9090L H TS, 9090L SH, 9090L SH T4, 9090L SH TS, 9090L T3, 9090X, 9090X GE, 9090X GE T3, 9090X GE T4, 9090X GE TS, 9090X H, 9090X H H, 9090X H T4, 9090X O, 9090X O GE, 9090X O GE T3, 9090X O GE T4, 9090X O GE TS, 9090X O H T4, 9090X O T3, 9090X O T4, 9090X O TS, 9090X OP, 9090X OP GE, 9090X T3, 9090X T4, 9090X TS, VX7090 - VENDIMIADORA (01/07 - 12/12), VX7090-OLIVES - VENDIMIADORA SÚPER INTENSIVA OLIVAS (10/10 - 12/13)

Check Ref. Before.

All trademarks belong to their respective owners and their use is for informational purposes only.

WWW.EDUARDOREPUESTOSAGRICOLAS.COM

VAT not included

Free EU transport on orders 600€

NEW HOLLAND-BRAUD COMPATIBLE

EDUARDO

REF.540A

SCREW-NUT self-locking-WASHER M8X25 (Zn) GUIDE-HOUSING FASTENING

Comp. 920019521,920008122,920011230

1620, 1620S, 2420, 2514, 2520, 2620, 2714, 2720, 7030L, 7030M, 7030M H, 8030L, 9030L, 9040L, 9040M, 9050L H, 9050L L, 9050L SH, 9060L, 9060L GE, 9060L H, 9060L SH, 9070L H, 9070L L, 9070L L T5, 9070L SH, 9070M, 9070N H T5, 9070N L, 9070N L T5, 9070 , 9080L, 9080L GE, 9080L H, 9080L SH, 9080N H, 9080N L, 9090L, 9090L GE, 9090L H, 9090L H T4, 9090L H T5, 9090L SH, 9090L SH T4, 9090L SH T5, 9090L T3, 9090X, 9090X GE, 9090X GE T3, 9090X GE T4, 9090X GE T5, 9090X H, 9090X H H, 9090X H T4, 9090X O, 9090X O GE, 9090X O GE T3, 9090X O GE T4, 9090X O GE T5, 9090X O H T4, 9090X O T3, 9090X O T4, 9090X O T5, 9090X OP, 9090X OP GE, 9090X T3, 9090X T4, 9090X T5, 5833, 5835, 5836, 5852, 5853, 5854, 5855, 5856, 5858, 5860, 5862, 5864, 5865, T140, T240, TB10, TB15, VL5060, VL5080, VL5090, VL530, VL540, VL550, VL570, VL600, VL6040, VL6050, VL6060, VL6070, VL6080, VL6090, VL610, VL620, VL630, VL640, VL660, VM3080, VM3080 AL, VM3090, VM340, VM370, VM4090, VM460, VN2080, VN2090, VN240, VN260, VN300, VX680,

REF.578A

SPLIT NUT M8

Comp. 920019493

7030L, 7030M, 7030M H, 8030L, 9030L, 9040L, 9040M, 9050L H, 9050L L, 9050L SH, 9060L, 9060L GE, 9060L H, 9060L SH, 9070L H, 9070L L, 9070L L T5, 9070L SH, 9070M, 9070N H T5, 9070N L, 9070N L T5, 9070 , 9080L, 9080L GE, 9080L H, 9080L SH, 9080N H, 9080N L, 9090L, 9090L GE, 9090L H, 9090L H T4, 9090L H T5, 9090L SH, 9090L SH T4, 9090L SH T5, 9090L T3, 9090X, 9090X GE, 9090X GE T3, 9090X GE T4, 9090X GE T5, 9090X H, 9090X H H, 9090X H T4, 9090X O, 9090X O GE, 9090X O GE T3, 9090X O GE T4, 9090X O GE T5, 9090X O H T4, 9090X O T3, 9090X O T4, 9090X O T5, 9090X OP, 9090X OP GE, 9090X T3, 9090X T4, 9090X T5, 5833, 5835, 5836, 5853, 5855, 5856, 5858, 5860, 5862, 5864, 5865, TB10, TB15, VL5060, VL5080, VL5090, VL530, VL540, VL550, VL570, VL600, VL6040, VL6050, VL6060, VL6070, VL6080, VL6090, VL610, VL620, VL630, VL640, VL660, VM3080, VM3080 AL, VM3090, VM340, VM370, VM4090, VM460, VN2080, VN2090, VN240, VN260, VN300, VX680, VX7090

REF.578B

SPLIT NUT M10

Comp. 920019492

7030L, 7030M, 7030M H, 8030L, 9030L, 9040L, 9040M, 9050L H, 9050L L, 9050L SH, 9060L, 9060L GE, 9060L H, 9060L SH, 9070L H, 9070L L, 9070L L T5, 9070L SH, 9070M, 9080L, 9080L GE, 9080L H, 9080L SH, 9080N H, 9080N L, 9090L, 9090L GE, 9090L H, 9090L H T4, 9090L H T5, 9090L SH, 9090L SH T4, 9090L SH T5, 9090L T3, 9090X, 9090X GE, 9090X GE T3, 9090X GE T4, 9090X GE T5, 9090X H, 9090X H H, 9090X H T4, 9090X O, 9090X O GE, 9090X O GE T3, 9090X O GE T4, 9090X O GE T5, 9090X O H T4, 9090X O T3, 9090X O T4, 9090X O T5, 9090X OP, 9090X OP GE, 9090X T3, 9090X T4, 9090X T5, 5833, 5835, 5836, 5853, 5855, 5856, 5858, 5860, 5862, 5864, 5865, TB10, TB15, VL5060, VL5080, VL5090, VL530, VL540, VL550, VL570, VL600, VL6040, VL6050, VL6060, VL6070, VL6080, VL6090, VL610, VL620, VL630, VL640, VL660, VM3080, VM3080 AL, VM3090, VM340, VM370, VM4090, VM460, VN2080, VN2090, VN240, VN260, VN300, VX680, VX7090

REF.578C

SPLIT NUT M12

Comp. 920017399

1620, 1620S, 2420, 2520, 2620, 2720, 7030L, 7030M, 7030M H, 8030L, 9030L, 9040L, 9040M, 9050L H, 9050L L, 9050L SH, 9060L, 9060L GE, 9060L H, 9060L SH, 9070L H, 9070L L, 9070L L T5, 9070L SH, 9070M, 9080L, 9080L GE, 9080L H, 9080L SH, 9080N H, 9080N L, 9090L, 9090L GE, 9090L H, 9090L H T4, 9090L H T5, 9090L SH, 9090L SH T4, 9090L SH T5, 9090L T3, 9090X, 9090X GE, 9090X GE T3, 9090X GE T4, 9090X GE T5, 9090X H, 9090X H H, 9090X H T4, 9090X O, 9090X O GE, 9090X O GE T3, 9090X O GE T4, 9090X O GE T5, 9090X O H T4, 9090X O T3, 9090X O T4, 9090X O T5, 9090X OP, 9090X OP GE, 9090X T3, 9090X T4, 9090X T5, 5833, 5835, 5836, 5852, 5853, 5854, 5855, 5856, 5858, 5860, 5862, 5864, 5865, VL5060, VL5080, VL5090, VL530, VL540, VL550, VL570, VL600, VL6040, VL6050, VL6060, VL6070, VL6080, VL6090, VL610, VL620, VL630, VL640, VL660, VM3080, VM3080 AL, VM3090, VM340, VM370, VM4090, VM460, VN2080, VN240, VN260, VN300, VX680, VX7090

REF.578D

SPLIT NUT M14

Comp. 920019392

7030M, 7030M H, 8030L, 9030L, 9040L, 9040M, 9050L H, 9050L L, 9050L SH, 9060L, 9060L GE, 9060L H, 9060L SH, 9070L H, 9070L L, 9070L L T5, 9070L SH, 9070M, 9080L, 9080L GE, 9080L H, 9080L SH, 9090L, 9090L GE, 9090L H, 9090L H T4, 9090L H T5, 9090L SH, 9090L SH T4, 9090L SH T5, 9090L T3, 9090X, 9090X GE, 9090X GE T3, 9090X GE T4, 9090X GE T5, 9090X H, 9090X H H, 9090X H T4, 9090X T3, 9090X T4, 9090X T5, 5833, 5835, 5836, 5853, 5855, 5856, 5858, 5860, 5862, 5864, 5865, VL5060, VL5080, VL5090, VL530, VL540, VL550, VL570, VL600, VL6040, VL6050, VL6060, VL6070, VL6080, VL6090, VL610, VL620, VL630, VL640, VL660, VM3080, VM3080 AL, VM3090, VM340, VM370, VM4090, VM460, VX680, VX7090

REF.578E

SPLIT NUT M16

Comp. 920019650

7030L, 7030M, 7030M H, 8030L, 9030L, 9040L, 9040M, 9050L H, 9050L L, 9050L SH, 9060L, 9060L GE, 9060L H, 9060L SH, 9070L H, 9070L L, 9070L L T5, 9070L SH, 9070M, 9080L, 9080L GE, 9080L H, 9080L SH, 9090L, 9090L GE, 9090L H, 9090L H T4, 9090L H T5, 9090L SH, 9090L SH T4, 9090L SH T5, 9090L T3, 9090X, 9090X GE, 9090X GE T3, 9090X GE T4, 9090X GE T5, 9090X H, 9090X H H, 9090X H T4, 9090X O H T4, 9090X O T3, 9090X O T4, 9090X T4, 9090X T5, VL5080, VL5090, VL550, VL570, VL6050, VL6060, VL6070, VL6080, VL6090, VL610, VL620, VL630, VL640, VL660, VM3080 AL, VM3090, VM370, VM4090, VM460, VX680, VX7090

REF.716A

MOVE ROLLERS CONVEYOR BELTS

Comp. 84205000

7030L, 7030M, 7030M H, 8030L, 9030L, 9040L, 9040M, 9050L H, 9050L L, 9050L SH, 9060L, 9060L GE, 9060L H, 9060L SH, 9070L H, 9070L L, 9070L L T5, 9070L SH, 9070M, 9080L, 9080L GE, 9080L H, 9080L SH, 9080N H, 9080N L, 9090L, 9090L GE, 9090L H, 9090L H T4, 9090L H T5, 9090L SH, 9090L SH T4, 9090L SH T5, 9090L T3, 9090X, 9090X GE, 9090X GE T3, 9090X GE T4, 9090X GE T5, 9090X H, 9090X H H, 9090X H T4, 9090X O, 9090X O GE, 9090X O GE T3, 9090X O GE T4, 9090X O GE T5, 9090X O H T4, 9090X O T3, 9090X O T4, 9090X O T5, 9090X OP, 9090X OP GE, 9090X T3, 9090X T4, 9090X T5, 5833, 5835, 5836, 5853, 5855, 5856, 5858, 5860, 5862, 5864, 5865, TB10, TB15, VL5060, VL5080, VL5090, VL530, VL540, VL550, VL570, VL600, VL6040, VL6050, VL6060, VL6070, VL6080, VL6090, VL610, VL620, VL630, VL640, VL660, VM3080, VM3080 AL, VM3090, VM340, VM370, VM4090, VM460, VN2080, VN2090, VN240, VN260, VN300, VX680, VX7090

REF.716B

MOVE ROSES BELTS DESTEMMER

Comp. 84122562

7030M, 7030M H, 8030L, 9040L, 9040M, 9050L H, 9050L L, 9050L SH, 9060L, 9060L GE, 9060L H, 9070L H, 9070L L, 9070L L T5, 9070L SH, 9070M, 9080L, 9080L GE, 9080L H, 9090L, 9090L GE, 9090L H, 9090L H T4, 9090L H T5, 9090L SH T4, 9090L SH T5, 9090L T3, 9090X, 9090X GE T3, 9090X GE T4, 9090X GE T5, 9090X H, 9090X H H, 9090X T3, VL5060, VN2090

REF.716C

MOVE AXES FINGER DESTEMMER

Comp. 84122561

7030L, 7030M, 7030M H, 8030L, 9030L, 9040L, 9040M, 9050L H, 9050L L, 9050L SH, 9060L, 9060L GE, 9060L H, 9070L H, 9070L L, 9070L L T5, 9070L SH, 9070M, 9080L, 9080L GE, 9080L H, 9080N H, 9080N L, 9090L, 9090L GE, 9090L H, 9090L H T4, 9090L H T5, 9090L SH T4, 9090L SH T5, 9090L T3, 9090X, 9090X GE T3, 9090X GE T4, 9090X GE T5, 9090X H, 9090X H H, 9090X H T4, 9090X T3, 9090X T4, 9090X T5, VL5060, VN2080, VN2090

REF.716D

MOVE WITHOUT END HYDRAULIC HEAD OLIVE

Comp. 920009489

9060L GE, 9080L GE, 9090L GE, 9090X GE, 9090X GE T3, 9090X GE T4, 9090X GE T5, 9090X O, 9090X O GE, 9090X O GE T3, 9090X O H T4, 9090X O T3, 9090X O T4, 9090X O T5, 9090X OP, 9090X OP GE, T140, T240, VL6060, VL6080, VL6090, VL620, VL640, VL660, VN2080, VX680, VX7090

REF.716E

MOVE FANS EXTRACTION TOP RIGHT

Comp. 920019656

7030L, 7030M, 7030M H, 8030L, 9040L, 9040M, 9060L, 9060L GE, 9060L H, 9060L SH, 9080L, 9080L GE, 9080L H, 9080L SH, 9090L, 9090L GE, 9090L H, 9090L SH, 9090X, 9090X GE, 9090X H, 9090X H H, SB33, SB35, SB53, SB55, VL5060, VL5080, VL5090, VL530, VL540, VL550, VL570, VL600, VL6040, VL6050, VL6060, VL6070, VL6080, VL6090, VL610, VL620, VL630, VL640, VL660, VM3080, VM3080 AL, VM3090, VM340, VM370, VM4090, VM460, VN2090, VN300, VX680, VX7090

REF.716H

MOVE FANS EXTRACTION TOP LEFT

Comp. 920019657

7030L, 7030M, 7030M H, 8030L, 9040L, 9040M, 9060L, 9060L GE, 9060L H, 9060L SH, 9080L, 9080L GE, 9080L H, 9080L SH, 9090L, 9090L GE, 9090L H, 9090L SH, 9090X, 9090X GE, 9090X H, 9090X H H, SB33, SB35, SB53, SB55, VL5060, VL5080, VL5090, VL530, VL540, VL550, VL570, VL600, VL6040, VL6050, VL6060, VL6070, VL6080, VL6090, VL610, VL620, VL630, VL640, VL660, VM3080, VM3080 AL, VM3090, VM340, VM370, VM4090, VM460, VN2090, VN300

REF.716J

MOVE FANS EXTRACTION TOP

Comp. 929918182

9090 OLIVE,SB35,SB60

REF.733A

HOOK

Comp. 920017733

1620, 1620S, 7030L, 7030M, 7030M H, 8030L, 9030L, 9040L, 9040M, 9050L H, 9050L L, 9050L SH, 9060L, 9060L GE, 9060L H, 9060L SH, 9070L H, 9070L L, 9070L L T5, 9070L SH, 9070M, 9080L, 9080L GE, 9080L H, 9080L SH, 9090L, 9090L GE, 9090L H, 9090L H T4, 9090L H T5, 9090L SH, 9090L SH T4, 9090L SH T5, 9090L T3, 9090X, 9090X GE, 9090X GE T3, 9090X GE T4, 9090X GE T5, 9090X H, 9090X H H, 9090X H T4, 9090X O GE T3, 9090X O GE T4, 9090X O GE T5, 9090X O H T4, 9090X O T3, 9090X O T4, 9090X O T5, 9090X T3, 9090X T4, 9090X T5, 5833, 5835, 5836, 5853, 5855, 5856, 5858, 5860, 5862, 5864, 5865, TB10, TB15, VL5060, VL5080, VL5090, VL530, VL540, VL550, VL570, VL600, VL6040, VL6050, VL6060, VL6070, VL6080, VL6090, VL610, VL620, VL630, VL640, VL660, VM3080, VM3080 AL, VM3090, VM340, VM370, VM4090, VM460, VN2080, VN2090, VN240, VN260, VN300, VX680, VX7090

REF.743B

SCREW M8X20 head+SPLIT+WASHER

Comp. 920017518,920008122

9030L, 9050L H, 9050L L, 9070L H, 9070L L, 9070L L T5, 9070M, 9090L H T4, 9090L H T5, 9090L T3, 9090X H T4, 9090X T3, 9090X T4, 9090X T6

REF.745A

WEAR PLATE 1mm

Comp. 84602774

9090X O, 9090X O GE, 9090X O GE T3, 9090X O GE T4, 9090X O GE T5, 9090X O H T4, 9090X O T3, 9090X O T4, 9090X O T5, 9090X OP, 9090X OP GE, VX7090

REF.710A

RIGHT PINION

Comp. 944029254,944005

7030L, 7030M, 7030M H, 8030L, 9030L, 9040L, 9040M, 9050L H, 9050L L, 9050L SH, 9060L, 9060L GE, 9060L H, 9060L SH, 9070L H, 9070L L, 9070L L T5, 9070L SH, 9070M, 9080L, 9080L GE, 9080L H, 9080L SH, 9080N H, 9080N L, 9090L, 9090L GE, 9090L H, 9090L H T4, 9090L H T5, 9090L SH, 9090L SH T4, 9090L SH T5, 9090L T3, 9090X, 9090X GE, 9090X GE T3, 9090X GE T4, 9090X GE T5, 9090X H, 9090X H H, 9090X H T4, 9090X O, 9090X O GE, 9090X O GE T3, 9090X O GE T4, 9090X O GE T5, 9090X O H T4, 9090X O T3, 9090X O T4, 9090X O T5, 9090X OP, 9090X OP GE, 9090X T3, 9090X T4, 9090X T5, 5833, 5835, 5836, 5853, 5855, 5856, 5858, 5860, 5862, 5864, 5865, VL5060, VL5080, VL5090, VL530, VL540, VL550, VL570, VL600, VL6040, VL6050, VL6060, VL6070, VL6080, VL6090, VL610, VL620, VL630, VL640, VL660, VM3080, VM3080 AL, VM3090, VM340, VM370, VM4090, VM460, VN2080, VN2090, VN240, VN260, VN300, VX680, VX7090

REF.710B

LEFT PINION

Comp. 944029255,944005

7030L, 7030M, 7030M H, 8030L, 9030L, 9040L, 9040M, 9050L H, 9050L L, 9050L SH, 9060L, 9060L GE, 9060L H, 9060L SH, 9070L H, 9070L L, 9070L L T5, 9070L SH, 9070M, 9080L, 9080L GE, 9080L H, 9080L SH, 9080N H, 9080N L, 9090L, 9090L GE, 9090L H, 9090L H T4, 9090L H T5, 9090L SH, 9090L SH T4, 9090L SH T5, 9090L T3, 9090X, 9090X GE, 9090X GE T3, 9090X GE T4, 9090X GE T5, 9090X H, 9090X H H, 9090X H T4, 9090X O, 9090X O GE, 9090X O GE T3

REF.711F

RIGHT CANVAS olives, 9090 olives

Comp. 84324502

9090X O, 9090X O GE, 9090X O GE T3, 9090X O GE T4, 9090X O GE T5, 9090X O H T4, 9090X O T3, 9090X O T4, 9090X O T5, 9090X OP, 9090X OP GE, VX7090

REF.711G

LEFT CANVAS olives,9090 olives

Comp. 84324501

9090X O, 9090X O GE, 9090X OP, 9090X OP GE, VX7090

VAT not included

Free EU transport on orders 600€

All trademarks belong to their respective owners and their use is for informational purposes only.

WWW.EDUARDOREPUESTOSAGRICOLAS.COM

Check Ref. Before.

NEW HOLLAND-BRAUD COMPATIBLE

EDUARDO

SKATES - GUIDES DESTEMMER (THICKNESS 26mm , 5mm MORE than the refferences)

SB, VL, VX (26mm, +5mm)

REF.254A

Comp. 944027443

SB33, SB35, SB36, SB53, SB55, SB56, SB58, SB60, SB62, SB64, SB65, VL5060, VL5080, VL5090, VL530, VL540, VL550, VL570, VL600, VL6040, VL6050, VL6060, VL6070, VL6080, VL6090, VL610, VL620,

REF.255A

Comp. 944030770

SB33, SB35, SB36, SB53, SB55, SB56, SB58, SB60, SB62, SB64, SB65, VL5060, VL5080, VL5090, VL530, VL540, VL550, VL570, VL600, VL6040, VL6050, VL6060, VL6070, VL6080, VL6090, VL610, VL620,

REF.256A

Comp. 944030771

SB33, SB35, SB36, SB53, SB55, SB56, SB58, SB60, SB62, SB64, SB65, VL5060, VL5080, VL5090, VL530, VL540, VL550, VL570, VL600, VL6040, VL6050, VL6060, VL6070, VL6080, VL6090, VL610, VL620,

REF.257A

Comp. 944030810

SB33, SB35, SB36, SB53, SB55, SB56, SB58, SB60, SB62, SB64, SB65, VL600, VL6040, VL6050, VL6060, VL6070, VL6080, VL6090, VL610, VL620, VL630, VL640, VL660, VM4090, VM460, VX680, VX7090

REF.258A

Comp. 944030811

SB33, SB35, SB36, SB53, SB55, SB56, SB58, SB60, SB62, SB64, SB65, VL600, VL6040, VL6050, VL6060, VL6070, VL6080, VL6090, VL610, VL620, VL630, VL640, VL660, VM4090, VM460, VX680, VX7090

REF.259A

Comp. 944030808

SB33, SB35, SB36, SB53, SB55, SB56, SB58, SB60, SB62, SB64, SB65, VL600, VL6040, VL6050, VL6060, VL6070, VL6080, VL6090, VL610, VL620, VL630, VL640, VL660, VM4090, VM460, VX680, VX7090

REF.260A

Comp. 944030809

SB33, SB35, SB36, SB53, SB55, SB56, SB58, SB60, SB62, SB64, SB65, VL600, VL6040, VL6050, VL6060, VL6070, VL6080, VL6090, VL610, VL620, VL630, VL640, VL660, VM4090, VM460, VX680, VX7090

REF.261A

Comp. 944027448 (94cm)

SB33, SB35, SB36, SB53, SB55, SB56, SB58, SB60, SB62, SB64, VL600, VL6040, VL6050, VL6060, VL6070, VL6080, VL6090, VL610, VL620, VL630, VL640, VL660, VM4090, VM460, VX680, VX7090

REF.261B

Comp. 944030102, 944030101 (84cm)

SB33, SB35, SB53, SB55, VL5060, VL5080, VL5090, VL530, VL540, VL550, VL570, VM3080, VM3090, VM340, VM370, VN2090, VN300

REF.266A

Comp. 944031960

SB36, SB56, SB58, SB60, SB62, SB64, SB65, VL600, VL6040, VL6050, VL6060, VL6070, VL6080, VL6090, VL610, VL620, VL630, VL640, VL660, VM4090, VM460, VX680, VX7090

REF.262A

Comp. 87629867

KIT 18: 4x254A, 2x255A, 2x256A, 2x257A, 2x258A, 2x259A, 2x260A, 2x266A

REF.262B

Comp. 84122582

KIT 16: 4x254A, 2x255A, 2x256A, 2x257A, 2x258A, 2x259A, 2x260A

REF.104A

OLIVES LOWER SHAKER 935mm Ø28

Comp. 265574

9090X, 9090X GE, 9090X GE T5, 9090X GE T4, 9090X GE T5, 9090X H H, 9090X H T4, 9090X O, 9090X O GE, 9090X O GE T3, 9090X O GE T4, 9090X O GE T5, 9090X O H T4, 9090X O T3, 9090X O T4,

REF.299A

NEW !

DESTEMMER AXE

Comp. 87398713

VL5060,9050L,9050L,9090L,VL6040,9060L,9040M,9080L,VL630,VL6070,VM460,VN2080,VX680,9090X,VL530,9070M,VL620,9050L,VM3090,VM340,VX7090,VL600,VL540,VL610,VL550,VL5080,VL570,VL6090,VL660,

REF.721A

BRUSH PIPE

Comp. 944031640

9090X GE T5, 9090X GE T4, 9090X GE T5, SB33, SB35, SB53, SB55, VL5060, VL5080, VL5090, VL530, VL540, VL550, VL570, VL600, VL6040, VL6050, VL6060, VL6070, VL6080, VL6090, VL610, VL620, VL630,

SB33, SB35, SB55, VL5080, VL5090, VL530, VL540, VL550, VM340, VM380

REF.262C

Comp. KIT 16 PIECES

4x254A, 2x255A, 2x256A, 2x581A, 2x582A, 2x583A, 2x583B

REF.581A

Comp. 944032089

SB33, SB35, SB53, SB55, VL5060, VL5080, VL5090, VL530, VL540, VL550, VL570, VM3080, VM3080 AL, VM3090, VM340, VM370, VN2090

REF.582A

Comp. 944030230

SB33, SB35, SB53, SB55, VL5060, VL5080, VL5090, VL530, VL540, VL550, VL570, VM3080, VM3080 AL, VM3090, VM340, VM370, VN2090

REF.583A

Comp. 944032090

SB33, SB35, SB53, SB55, VL5060, VL5080, VL5090, VL530, VL540, VL550, VL570, VM3080, VM3080 AL, VM3090, VM340, VM370, VN2090

REF.583B

Comp. 944030100

SB33, SB35, SB53, SB55, VL5060, VL5080, VL5090, VL530, VL540, VL550, VL570, VM3080, VM3080 AL, VM3090, VM340, VM370, VN2090

9040M, 9040L, 9060L, 9090L, 9080L,9090X

REF.264A

Comp. 84234229

7030L, 7030M, 7030M H, 8030L, 9030L, 9040L, 9040M, 9050L H, 9050L L, 9060L, 9060L GE, 9060L H, 9060L SH, 9070L H, 9070L L, 9070L L T5, 9070M, 9080L, 9080L GE, 9080L H, 9080L SH, 9090L, 9090L

REF.265A

Comp. 84248137

7030L, 7030M, 7030M H, 8030L, 9030L, 9040L, 9040M, 9050L H, 9050L L, 9060L, 9060L GE, 9060L H, 9060L SH, 9070L H, 9070L L, 9070L L T5, 9070M, 9080L, 9080L GE, 9080L H, 9080L SH, 9090L, 9090L

REF.266B

Comp. 84243927

7030L, 7030M, 7030M H, 8030L, 9040L, 9040M, 9060L, 9060L GE, 9060L H, 9060L SH, 9080L, 9080L GE, 9080L H, 9080L SH, 9090L, 9090L GE, 9090L H, 9090X, 9090X H, 9090X H H

REF.267A

Comp. 84248147

9040L, 9040M, 9080L, 9090L, 9090X

REF.268A

Comp. 84248148

7030L, 7030M, 7030M H, 8030L, 9040L, 9040M, 9060L, 9060L GE, 9060L H, 9060L SH, 9080L, 9080L GE, 9080L H, 9080L SH, 9090L, 9090L GE, 9090L H, 9090X, 9090X H, 9090X H H

REF.269A

Comp. KIT 18 PIECES

12x264A, 2x265A, 4x266B

REF.719A

Comp. 84243939

7030L, 7030M, 7030M H, 8030L, 9040L, 9040M, 9060L, 9060L GE, 9060L H, 9060L SH, 9080L, 9080L GE, 9080L H, 9080L SH, 9090L, 9090L GE, 9090L H, 9090X, 9090X H, 9090X H H

REF.720A

Comp. 87483704

7030L, 7030M, 7030M H, 8030L, 9030L, 9040L, 9040M, 9050L H, 9050L L, 9050L SH, 9060L, 9060L GE, 9060L H, 9060L SH, 9070L H, 9070L L, 9070L L T5, 9070L SH, 9070M, 9080L, 9080L GE, 9080L H, 9080L SH, 9090L, 9090L GE, 9090L H, 9090L H T4, 9090L H T5, 9090L SH, 9090L SH T4, 9090L SH T5, 9090L T3, 9090X, 9090X GE, 9090X GE T3, 9090X GE T4, 9090X GE T5, 9090X H, 9090X H H, 9090X H T4, 9090X T3, 9090X T4, 9090X T5

REF.738A

Comp. 84287465

7030L, 7030M, 7030M H, 8030L, 9040L, 9040M, 9050L L, 9060L, 9060L GE, 9060L H, 9070L L, 9070L L T5, 9070M, 9080L, 9080L GE, 9080L H, 9080N H, 9080N L, 9090L, 9090L GE, 9090L H, 9090L H T4, 9090L H T5, 9090L T3, 9090X, 9090X H, 9090X H H

REF.738B

Pcs.

12x264A, 2x265A, 4x266B, 1x267A, 1x267B, 4x719A, 24x738A

Check Ref. Before.

All trademarks belong to their respective owners and their use is for informational purposes only.

WWW.EDUARDOREPUESTOSAGRICOLAS.COM

VAT not included

Free EU transport on orders 600€

NEW HOLLAND-BRAUD COMPATIBLE

EDUARDO

NYLON - GUIDES DESTEMMER (THICKNESS 26mm , 6mm MORE than the refferences)

9070L L, 9050L H, 9050L L, 9070L H, 9030L H T4, 9070M, 9090X GE T4, 9090 H T4 (26mm , orig + 6mm)

REF.265A

Comp. 84248137

7030L, 7030M, 7030M H, 8030L, 9030L, 9040L, 9040M, 9050L H, 9050L L, 9060L, 9060L GE, 9060L H, 9060L SH, 9070L H, 9070L L, 9070L L T5, 9070M, 9080L, 9080L GE, 9080L H, 9080L SH, 9090L, 9090L GE, 9090L H, 9090L H T4, 9090L H T5, 9090L T3, 9090X, 9090X H, 9090X H H, 9090X H T4, 9090X T3, 9090X T4, 9090X T5

REF.269B

Comp. KIT (28 uds)

2x265A, 4x741A, 2x741B, 2x741C, 4x741D, 2x741E, 2x741F, 8x741G, 1x742C, 1x742D

REF.756

Comp. 47994115

9030L,9050L,9070L

KIT28u(4x756A+4x757B+1X742C+1X742D+4X741A+12X264A+2X265A)

REF.741A

Comp. 47966974

9030L, 9050L H, 9050L L, 9070L H, 9070L L, 9070L L T5, 9070M, 9090L H T4, 9090L H T5, 9090L T3, 9090X H T4, 9090X T3, 9090X T4, 9090X T5

REF.741B

Comp. 51417647

9050L H, 9050L L, 9070L H, 9070L L, 9070L L T5, 9090L H T4, 9090L H T5, 9090L T3, 9090X H T4, 9090X T3, 9090X T4, 9090X T5

REF.741C

Comp. 51417695

9050L H, 9050L L, 9070L H, 9070L L, 9070L L T5, 9090L H T4, 9090L H T5, 9090L T3, 9090X H T4, 9090X T3, 9090X T4, 9090X T5

REF.741D

Comp. 51417642

9050L H, 9050L L, 9070L H, 9070L L, 9070L L T5, 9090L H T4, 9090L H T5, 9090L T3, 9090X H T4, 9090X T3, 9090X T4, 9090X T5

REF.741E

Comp. 51417655

9050L H, 9050L L, 9070L H, 9070L L, 9070L L T5, 9090L H T4, 9090L H T5, 9090L T3, 9090X H T4, 9090X T3, 9090X T4, 9090X T5

REF.741F

Comp. 51417665

9050L H, 9050L L, 9070L H, 9070L L, 9070L L T5, 9090L H T4, 9090L H T5, 9090L T3, 9090X H T4, 9090X T3, 9090X T4, 9090X T5

REF.741G

Comp. 51417653 (78cm)

9050L H, 9050L L, 9070L H, 9070L L, 9070L L T5, 9090L H T4, 9090L H T5, 9090L T3, 9090X H T4, 9090X T3, 9090X T4, 9090X T5

REF.742C

Comp. 48145277,47966940

9030L, 9050L H, 9050L L, 9070L H, 9070L L, 9070L L T5, 9070M, 9090L H T4, 9090L H T5, 9090L T3, 9090X H T4, 9090X T3, 9090X T4, 9090X T5

REF.742D

Comp. 48145279,4766939

9030L, 9050L H, 9050L L, 9070L H, 9070L L, 9070L L T5, 9070M, 9090L H T4, 9090L H T5, 9090L T3, 9090X H T4, 9090X T3, 9090X T4, 9090X T6

★ REF.777A

Comp. 47476692

SERIE 9000

20,79€/u | **20,79€/u** | **374,00€/u**

REF.756A

Comp. 47890322 (1m)

9030L, 9030LT5, 9050LH, 9050LHT5, 9050LL, 9050LLT5, 9070LH, 9070LHT5, 9070LL, 9070LLT5, 9090LHT4, 9090LHT5, 9070MT5, 9070M, 9090XT4, 9090XT5, 9050LH, 9070LH, 9090LHT5

REF.757B

Comp. 47890324 (1,06 m)

9030L, 9030LT5, 9050LH, 9050LHT5, 9050LL, 9050LLT5, 9070LH, 9070LHT5, 9070LL, 9070LLT5, 9090LHT4, 9090LHT5, 9070MT5, 9070M, 9090XT4, 9090XT5, 9050LH, 9070LH, 9090LHT6

46,20€/u

REF.728A

ELECTROVALVULA SOLENOID

Comp. 920018591,70052580

SB33, SB35, SB36, SB52, SB53, SB54, SB55, SB56, SB58, SB60, SB62, SB64, SB65, TB10, TB15

REF.727A

PINION 25 TEETH

Comp. 87532045,9440002

7030L, 9030L, 9050L L, 9070L L, 9070L L T5, 9090L T3, 9090X, 9090X GE, 9090X GE T3, 9090X GE T4, 9090X GE T5, 9090X H, 9090X H H, 9090X H T4, 9090X T3, 9090X T4, 9090X T5, VLS060, VM3080, VX7090

★ REF.509H

NEW !

SENSOR VENTILADOR

Comp. 84058860

8030L, 9030L, 9040L, 9040M, 9050L H, 9050L L, 9050L SH, 9060L, 9060L GE, 9060L H, 9060L SH, 9070L H, 9070L L, 9070L L T5, 9070L SH, 9070M, 9070N H T5, 9070N L, 9070N L T5, 9070 , 9080L, 9080L GE, 9080L H, 9080L SH, 9080N H, 9080N L, 9090L, 9090L GE, 9090L H, 9090L H T4, 9090L H T5, 9090L SH, 9090L SH T4, 9090L SH T5, 9090L T3,

REF.755B

ARTICULATION SHAKER 9080N

Comp. 920019036

9080N

REF.540B

SCREW-NUT self-locking-WASHER M8X35MM

Comp. 920019522

9000, 7000, 8000, VL, SB, VN, VX

★ REF.754A

NEW !

COLUMN SEPARATOR

Comp. 84470398

9000L, 9000M, 9000X

★ REF.299B

NEW !

FLANGE

Comp. 944022084

7030, 8030, SERIE 9000, SERIE

★ REF.519D

NEW !

SPLIT BUSHING DIAM65

Comp. 48025605

8.50L,8030L,9050L,9060L,9070L,9080L

★ REF.727B

NEW !

PINION 25 TEETH

Comp. 84303278

11,90, 10,90, 9090OLIVES, 7090OLIVES

★ REF.727C

NEW !

PINION 40 TEETH

Comp. 84325670

11.90X, 10.90X, 9090X OLIVES, VX7090 OLIVES

★ REF.299C

NEW !

SUPPORT PIECE

Comp. 84255402

9040L, 9060, 9080, 9090L

★ REF.778B

NEW !

FAN BALL BEARING 42/80/42

Comp. 920018181

7030, 8030, SERIE 9000, SERIE VL, VM

★ REF.778A*

NEW !

CLEANING FAN

Comp. 51459182, 944005235

SERIE 9000, VL, SB

NEW HOLLAND-BRAUD
COMPATIBLE

EDUARDO

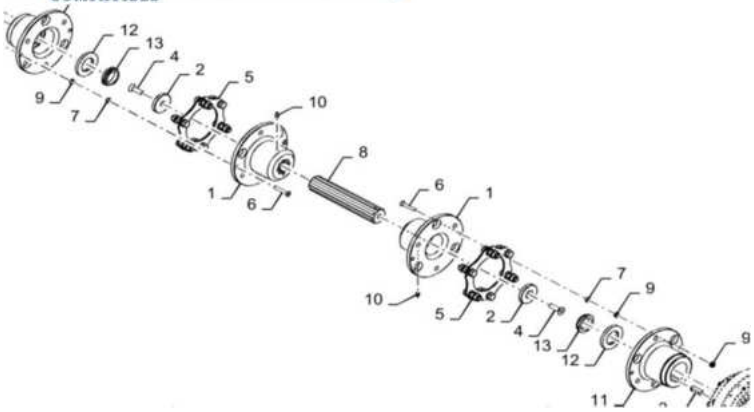

REF.744A

DEFLECTOR

Comp. 944033500

9090X, 9090X GE, 9090X GE T3, 9090X GE T4, 9090X GE T5, 9090X H, 9090X H H, 9090X H T4, 9090X O, 9090X O GE, 9090X O GE T3, 9090X O GE T4, 9090X O GE T5, 9090X O H T4, 9090X O T3, 9090X O T4, 9090X O T5, 9090X OP, 9090X OP GE, 9090X T3, 9090X T4, 9090X T5, SB65, VX680, VX7090

NEW !

REF.779A

COUNTERSHAFT

Comp. 47503574

N.8: 11.90X, 10,90X, 9090X, 9090X OLIVES, VX7090, VX7090 OLIVES

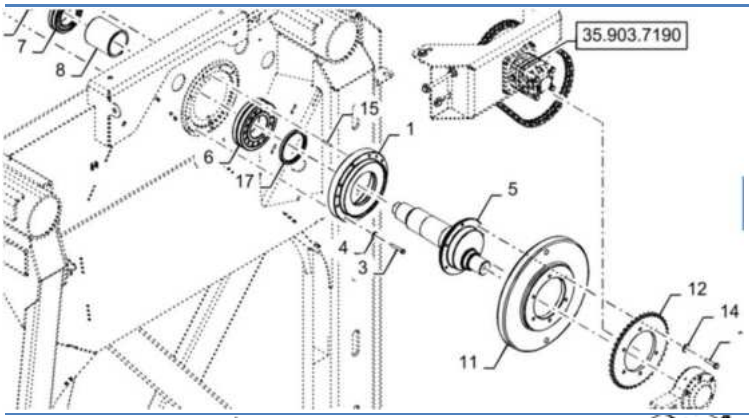

NEW !

REF.779D

AXIS

Comp. 84520440

11.90X, 10.90X, 9090X, 9090X OLIVES, VX7090, VX7090 OLIVES

NEW !

REF.779C

CUBE

Comp. 47507921

Nº1.:11.90X, 10.90X, 9090X, 9090X OLIVES, VX7090, VX9090 OLIVES

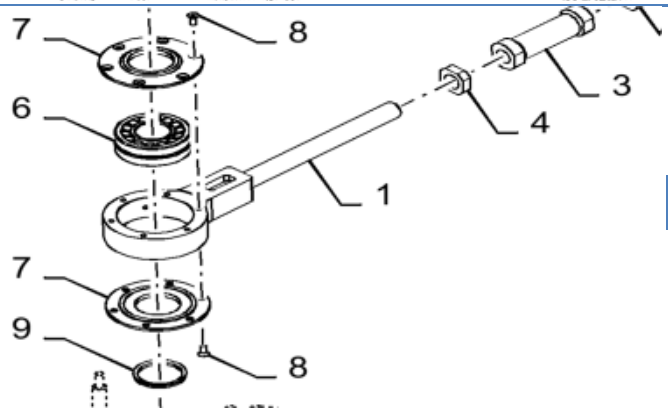

NEW !

REF.732P

BEARING 50X110X40

Comp. 84465337

11.90X, 10.90X, 9090X OLIVES, VX7090 OLIVES

NEW !

REF.779B

CUBE

Comp. 47504193

Nº11.: 11.90X, 10.90X ,9090X, 9090X OLIVES, VX7090, VX7090 OLIVES

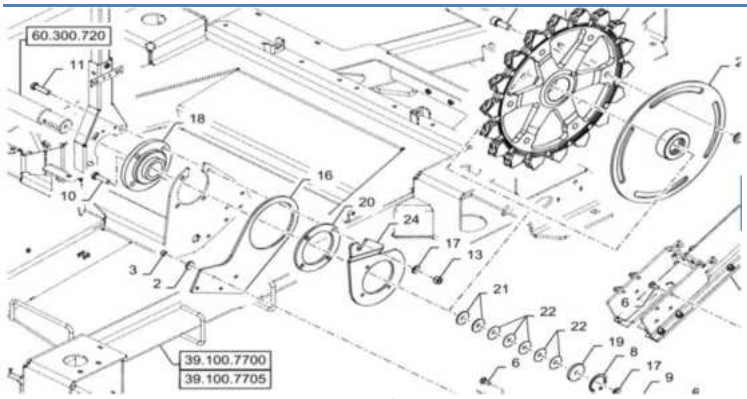

NEW !

REF.779E

FLANGE BEARING

Comp. 920017392

11.90X, 10.90X, 9000, VL, SB

NEW !

REF.779F

BEARING 50/110/62

Comp.

11.90X, 10.90X, 9000, VL, SB

REF.780A

SLIDE

Comp. 87490576

9040L, 9040M, 9050L, 9060L, 9070L, 9080L, 9090L

REF.780B

SKATE PLATE

Comp. 87644826

9040L, 9040M, 9050L, 9060L, 9070L, 9080L, 9090L

REF.780C

GUIDE

Comp. 94400520

VL600, VL6040, VL6050, VL6060, VL6070, VL6090 ,VL610, VL620, VL630, VL640, VM4090, VM460 ,SB36, SB56, SB58, SB60, SB62, SB64

REF.780D

GUIDE

Comp. 944027208

VL600, VL6040, VL6050, VL6060, VL6070, VL6090, VL610, VL620, VL630, VL640, VM4090, VM460

Check Ref. Before.

All trademarks belong to their respective owners and their use is for informational purposes only.

WWW.EDUARDOREPUESTOSAGRICOLAS.COM

VAT not included

Free EU transport on orders 600€

11.90 X

REF.747A*	REF.747B*	REF.748A*	REF.748B*	REF.293P
RIGHT BUCKET VERY HIGH CAPACITY 9000XXL	LEFT BUCKET VERY HIGH CAPACITY 9000XXL	KIT 10 RIGHT BUCKET VERY HIGH CAPACITY 9000XXL	KIT 10 LEFT BUCKET VERY HIGH CAPACITY 9000XXL	COBER BELT OLIVE CENTRAL 399X2435mm
Comp. 91743106	**Comp. 91743105**	**Comp. 91767999**	**Comp. 91768004**	**Comp. 90337361**
11.90X	11.90X	11.90X	11.90X	11.90X

REF.749A	REF.750A	REF.751A	REF.752A	REF.293Q
STAINLESS STEEL PLATE 9000XXL	COVER PLATE 9000XXL	SCRAPER RIGHT 9000XXL	SCRAPER LEFT 9000XXL	COVER BELT 9090 OLIVE SIDE 400x2030MM
Comp. 90443515	**Comp. 90443517**	**Comp. 90443909**	**Comp. 90443906**	**Comp. 51687092**
11.90X	11.90X	11.90X	11.90X	11.90X

REF.753A	★ REF.295U NEW !	★ REF.295W NEW !	★ REF.294J	★ REF.294K
SUPPORT ARTICULATION	DRIVE ROLLER 11.90/9080N	IDLE ROLLER 11.90/9080N	='[GESTION 2025.xls]ProductosESP'!I354	BELT JOINT FOR 9 HOLES (stainless)
Comp. 84278326	**Comp. 47364561**	**Comp. 51584931**	**Comp. -**	**Comp.**
9000X,9000XXL,VX OLIVES	11.90X, 9080N	11.90X, 9080N	11.90X	11.90X

11.90 X

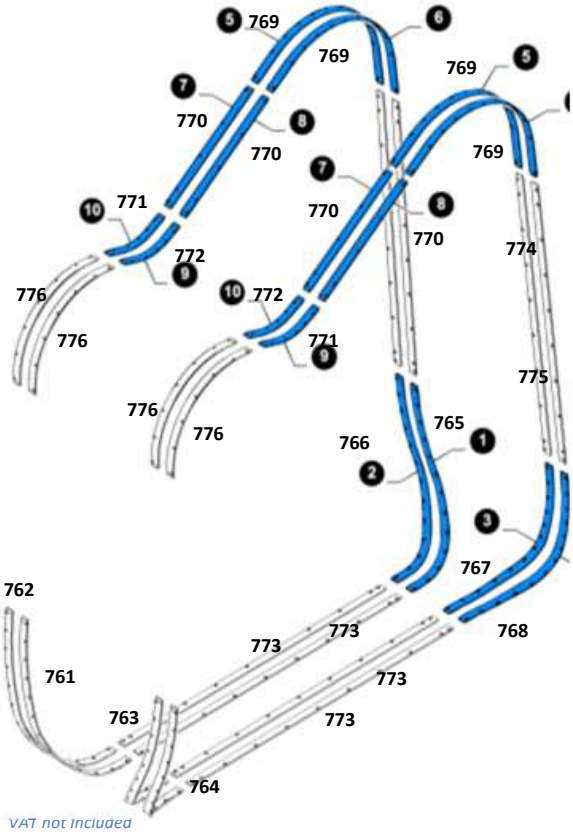

FRONT		
REF.761 ★	RIGHT INSIDE	Comp. 51597371
REF.762 ★	LEFT OUTSIDE	Comp. 51597372
REF.763 ★	LEFT INSIDE	Comp. 51597373
REF.764 ★	LEFT OUTSIDE	Comp. 51597374
REAR		
REF.765 ★	RIGHT INSIDE	Comp. 51597375
REF.766 ★	RIGHT OUTSIDE	Comp. 51597377
REF.767 ★	LEFT INSIDE	Comp. 51597376
REF.768 ★	LEFT OUTSIDE	Comp. 51597378
OTHER		
REF.769 ★	UPPER REAR	Comp. 51577861
REF.770 ★	STRAIGHT PINION	Comp. 51577859
REF.771 ★	RIGHT/LEFT OUTER SPROCKET	Comp. 51632507
REF.772 ★	RIGHT/LEFT INNER PINION	Comp. 51632707
REF.776 ★	UPPER FRONT CURVE	Comp. 51632509
REF.773 ★	UPPER REAR STRAIGHT	Comp. 51577839
REF.774 ★	UPPER REAR STRAIGHT	Comp. 90420851
REF.775 ★	LOWER REAR STRAIGHT	Comp. 944034405

NEW HOLLAND-BRAUD COMPATIBLE

EDUARDO

7090X OLIVE — ANTI - FRICTION STEEL

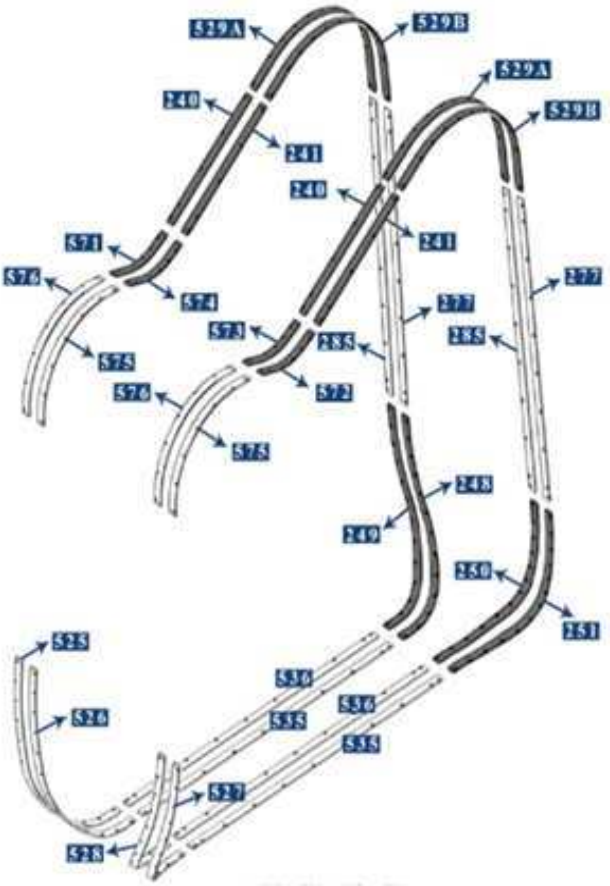

		FRONT	
REF.525		Outside left	Comp. 87486375
REF.526		Inside left	Comp. 87486377
REF.527		Outside right	Comp. 87486376
REF.528		Outside right	Comp. 87486378
		REAR	
REF.248		Inside left	Comp. 944023837
REF.249		Outside left	Comp. 944023838
REF.250		Inside right	Comp. 944023835
REF.251		Outside right	Comp. 944023836
		OTHER	
REF.529A		Right rear curve	Comp. 944020859
REF.529B		Left rear curve	Comp. 944024537
REF.240		Right upper right	Comp. 944015638
REF.241		Left upper right	Comp. 944015639
REF.571	5	Left pinion curve	Comp. 87499779
REF.572	5	Left pinion curve	Comp. 87499781
REF.573	5	Right pinion curve	Comp. 87499780
REF.574	5	Right pinion curve	Comp. 87499778
REF.575		Right front curve	Comp. 944032892
REF.576		Left front curve	Comp. 944032893
REF.535		Long bottom straight	Comp. 87486373
REF.536		Long bottom straight	Comp. 87486374
REF.285		Long lateral straight	Comp. 944020863
REF.277		Long lateral straight	Comp. 944020862
REF.543A		KIT 8 PIECES	1x525 1x526 1x527 1x528 1x248 1x249 1x250 1x251
REF.577		KIT 16 PIECES	1x248 1x249 1x250 1x251 1x571 1x572 1x573 1x574 2x529A 2x529B 2x240 2x241
REF.543B		KIT 24 PIECES	1x525 1x526 1x527 1x528 1x248 1x249 1x250 1x251 2x529 2x529B 2x240 2x241

9090X

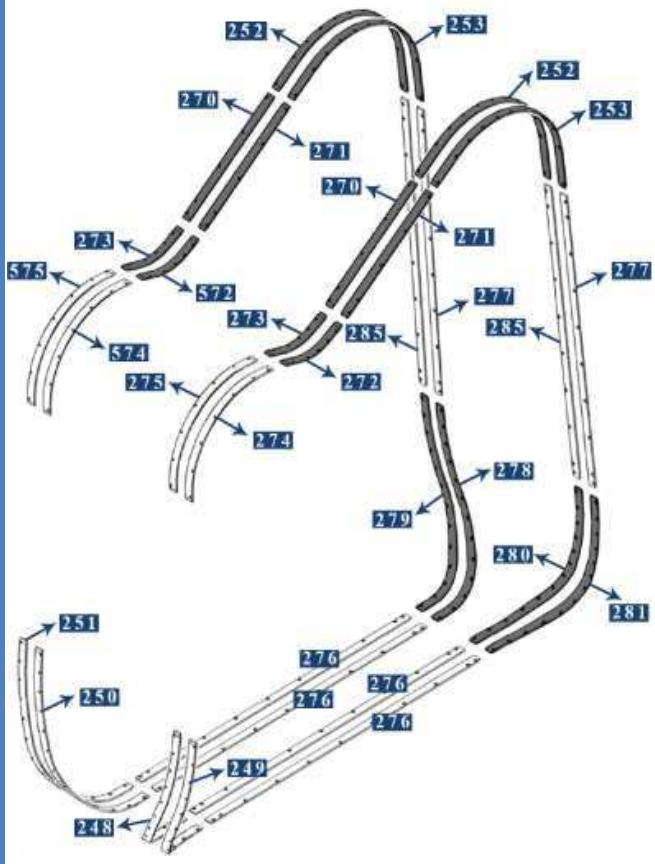

		FRONT	
REF.248		Inside left	Comp. 944023837
REF.249		Outside left	Comp. 944023838
REF.250		Inside right	Comp. 944023835
REF.251		Outside right	Comp. 944023836
		REAR	
REF.278		Inside left	Comp. 944020882
REF.279		Outside left	Comp. 944020880
REF.280		Inside right	Comp. 944020883
REF.281		Outside right	Comp. 944020881
		OTHER	
REF.252		Right rear curve	Comp. 84470244
REF.253		Left rear curve	Comp. 84470245
REF.270		Right upper right	Comp. 87644834
REF.271		Left upper right	Comp. 87644833
REF.272		Left pinion curve	Comp. 87644822
REF.273		Right pinion curve	Comp. 87644823
REF.274		Right front curve	Comp. 84478586
REF.275		Left front curve	Comp. 84478585
REF.276		Long bottom straight	Comp. 944020750
REF.285		Long lateral straight	Comp. 944020863
REF.277		Long lateral straight	Comp. 944020862
REF.542A		KIT 8 PIECES	1x248 1x249 1x250 1x251 1x278 1x279 1x280 1x281
REF.523A		KIT 16 PIECES	1x278 1x279 1x280 1x281 2x252 2x253 2x270 2x271 2x272 2x273
REF.542C		KIT 24 PIECES	1x248 1x249 1x250 1x251 1x278 1x279 1x280 1x281 2x252 2x253 2x270 2x271 2x272 2x273 2x274 2x275

All trademarks belong to their respective owners and their use is for informational purposes only.

VAT not included

Check Ref. Before.

WWW.EDUARDOREPUESTOSAGRICOLAS.COM

Free EU transport on orders 600€

NEW HOLLAND-BRAUD COMPATIBLE

EDUARDO

9040L, 9060L, 9080L, 9090L, 9040M, 9050L(*) — ANTI - FRICTION STEEL

FRONT/REAR

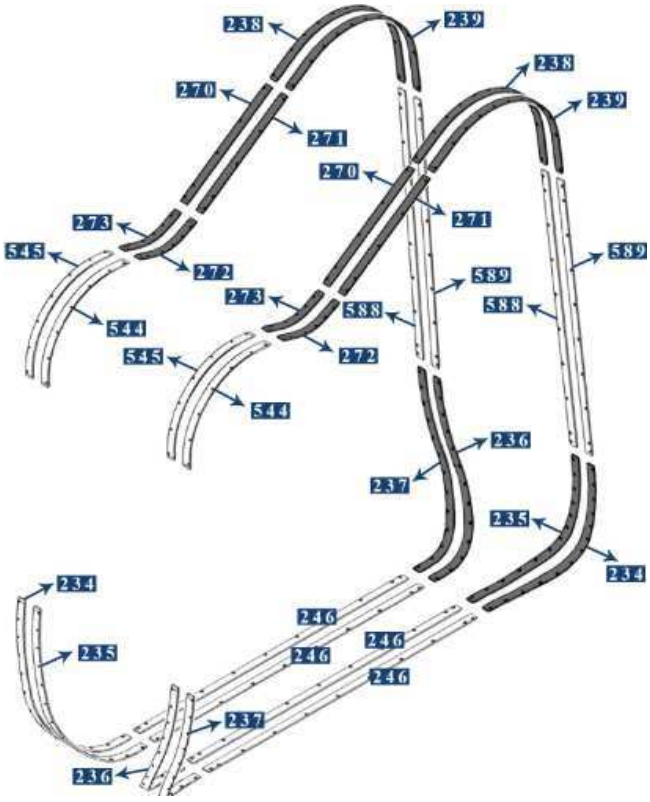

9030L/9050L/9070l/9050M

REF.234	Outside right / left	Comp. 944006223
REF.235	Inside left/ right	Comp. 944006222
REF.236	Inside right / left	Comp. 944006220
REF.237	Outside left / right	Comp. 944006221
REF.238	Right rear curve	Comp. 944013735
REF.239	Left rear curve	Comp. 944013736
REF.270	Right upper right	Comp. 87644834
REF.271	Left upper right	Comp. 87644833
REF.272	Left pinion curve	Comp. 87644822
REF.273	Right pinion curve	Comp. 87644823
REF.544	Right front curve	Comp. 87644825
REF.545	Left front curve	Comp. 87644824
REF.246	Long bottom straight	Comp. 944005797
REF.588	Long lateral straight	Comp. 944027192
REF.589	Long lateral straight	Comp. 944027193
REF.541A	KIT 8 PIECES	2x234 2x235 2x236 2x237
REF.544A	KIT 16 PIECES	1x234 1x235 1x236 1x237 2x238 2x239 2x270 2x271 2x272 2x273
REF.541D	KIT 24 PIECES	2x234 2x235 2x236 2x237 2x238 2x239 2x270 2x271 2x272 2x273 2x544 2x545
REF.760A ★	Right front curve 9050L	Comp. 47706314
REF.760B ★	Left front curve 9050L	Comp. 47706312

SB36 — OPTION 1 — SB56, SB58, SB60, SB62, SB64

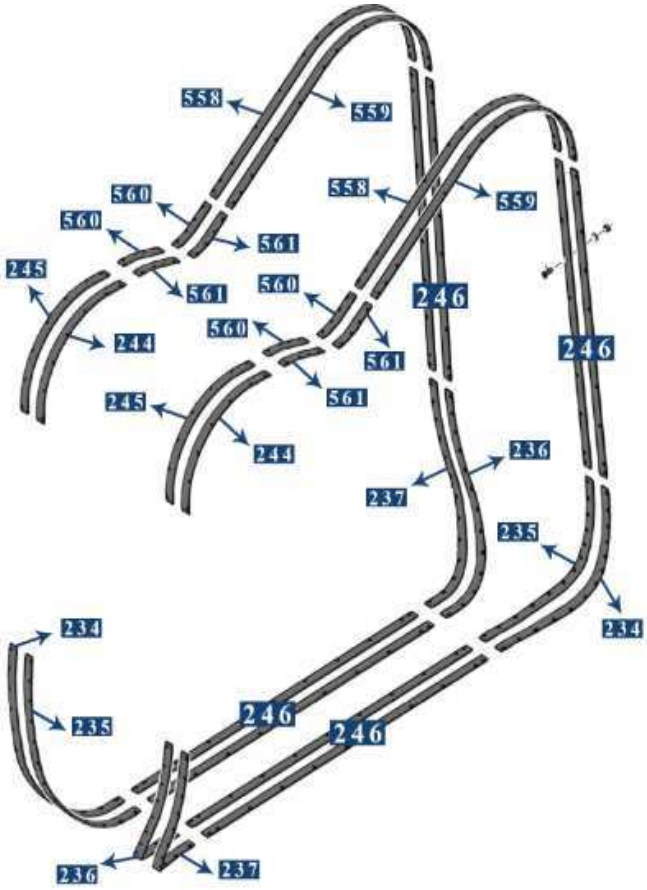

REF.234		Outside right / left	Comp. 944006223
REF.235		Inside left/ right	Comp. 944006222
REF.236		Inside right / left	Comp. 944006220
REF.237		Outside left / right	Comp. 944006221
REF.558	**15**	Right rear curve	Comp. 944007948
REF.559	**15**	Left rear curve	Comp. 944007949
REF.560	**3**	Right pinion curve	Comp. 944007945
REF.561	**3**	Left pinion curve	Comp. 944007944
REF.244		Left front curve	Comp. 944007947
REF.245		Right front curve	Comp. 944007946
REF.246		Long bottom straight	Comp. 944005797
REF.541A		KIT 8 PIECES	2x234 2x235 2x236 2x237
REF.522B		KIT 9965156 16 PIECES	1x234 1x235 1x236 1x237 2x558 2x559 4x560 4x561
REF.541E		KIT 24 PIECES	2x234 2x235 2x236 2x237 2x558 2x559 4x560 4x561 2x244 2x245

All trademarks belong to their respective owners and their use is for informational purposes only.

NEW HOLLAND-BRAUD COMPATIBLE

EDUARDO

SB33, SB35, SB53, SB55 — ANTI - FRICTION STEEL

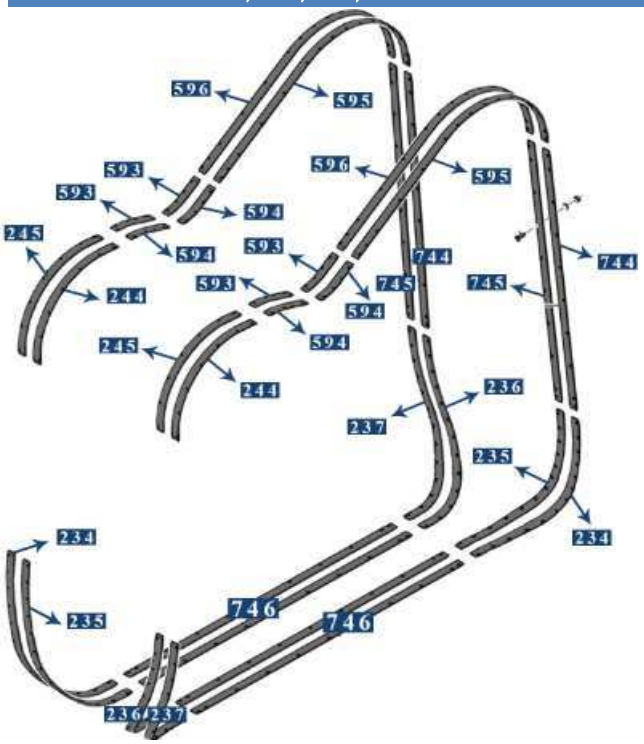

REF.234		Outside right / left	Comp. 944006223
REF.235		Inside left/ right	Comp. 944006222
REF.236		Inside right / left	Comp. 944006220
REF.237		Outside left / right	Comp. 944006221
REF.596	14	Right rear curve	Comp. 944013294
REF.595	14	Left rear curve	Comp. 944013295
REF.594	3	Right pinion curve	Comp. 3 x Ø
REF.593	3	left pinion curve	Comp. 3 x Ø
REF.244		Left front curve	Comp. 944007947
REF.245		Right front curve	Comp. 944007946
REF.744		Long lateral straight	Comp. 944013298
REF.745		Long lateral straight	Comp. 944013299
REF.746		Bottom straight	Comp. 944009291
REF.541A		KIT 8 PIECES	2x234 2x235 2x236 2x237
REF.522C		KIT 9964808 20 PIECES	2x234 2x235 2x236 2x237 2x596 2x595 4x594 4x593
REF.541F		KIT 24 PIECES	2x234 2x235 2x236 2x237 2x596 2x595 4x594 4x593 2x244 2x245

VX7090, VX680, SB65

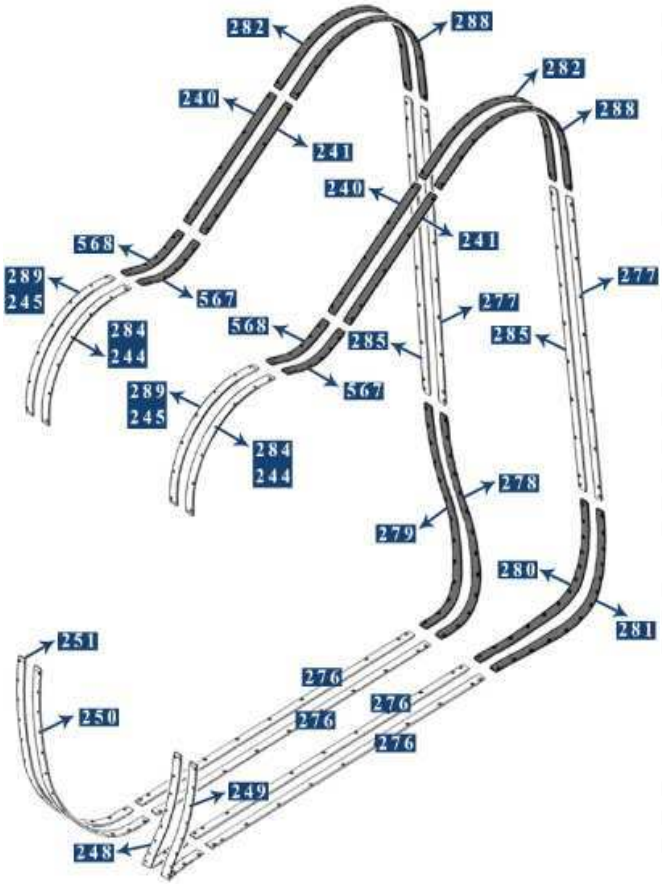

	FRONT	
REF.248	Inside left	Comp. 944023837
REF.249	Outside left	Comp. 944023838
REF.250	Inside right	Comp. 944023835
REF.251	Outside right	Comp. 944023836
	TRASERAS	
REF.278	Inside left	Comp. 944020882
REF.279	Outside left	Comp. 944020880
REF.280	Inside right	Comp. 944020883
REF.281	Outside right	Comp. 944020881
	OTHER	
REF.282	Right rear curve	Comp. 944020859
REF.288	Left rear curve	Comp. 944024537
REF.240	Right upper right	Comp. 944015638
REF.241	Left upper right	Comp. 944015639
REF.567	Left pinion curve	Comp. 944015993
REF.568	Right pinion curve	Comp. 944015994
REF.276	Long bottom straight	Comp. 944020750
REF.285	Long lateral straight	Comp. 944020863
REF.277	Long lateral straight	Comp. 944020862
REF.538B	Straight 2 holes	Comp. 87486371
	VX7090 / VX680	
REF.284	Right front curve	Comp. 944032892
REF.289	Left front curve ext	Comp. 944032893
REF.542B	KIT 24 PIECES	1x248 1x249 1x250 1x251 1x278 1x279 1x280 1x281 2x282 2x288 2x240 2x241 2x567 2x568 2x284 2x289
	SB65	
REF.244	Left front curve	Comp. 944007947
REF.245	Right front curve	Comp. 944007946
REF.542A	KIT 8 PIECES	1x248 1x249 1x250 1x251 1x278 1x279 1x280 1x281
REF.524	KIT 16 PIECES	1x278 1x279 1x280 1x281 2x282 2x288 2x240 2x241 2x567 2x568
REF.542D	KIT 24 PIECES	1x248 1x249 1x250 1x251 1x278 1x279 1x280 1x281 2x282 2x288 2x240 2x241 2x567 2x568 2x244 2x245

VAT not included
Free EU transport on orders 600€

All trademarks belong to their respective owners and their use is for informational purposes only.

VL600, VL6040, VL6050, VL6060, VL6070, VL6080, VL6090, VL610, VL620, VL630, VL640, VL660 — OPTION 2 — SB56, SB58, SB60, SB62, SB64

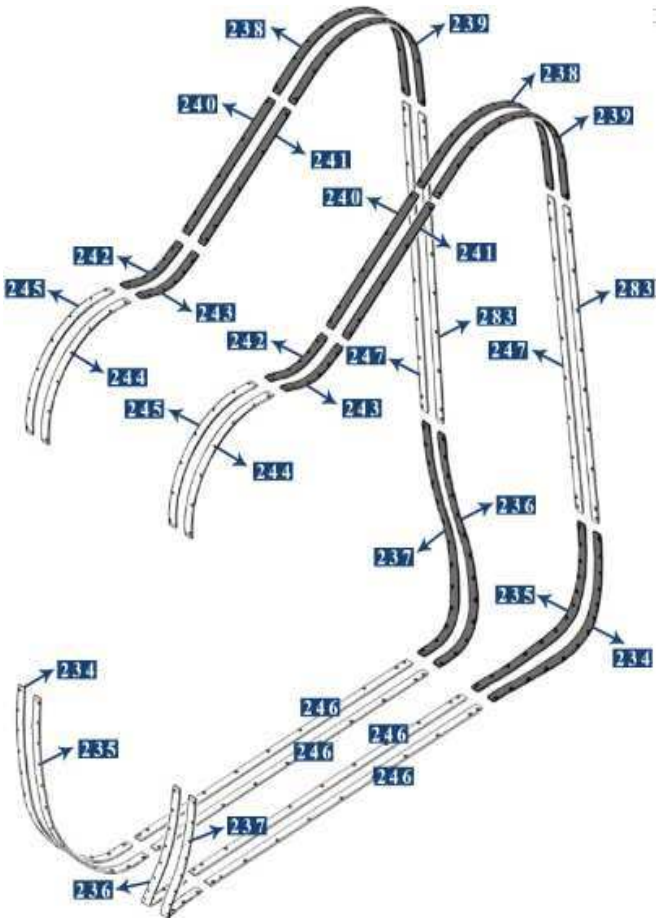

FRONT/REAR

REF.234	Outside right / left	Comp. 944006223
REF.235	Inside left/ right	Comp. 944006222
REF.236	Inside right / left	Comp. 944006220
REF.237	Outside left / right	Comp. 944006221
REF.238	Right rear curve	Comp. 944013735
REF.239	Left rear curve	Comp. 944013736
REF.240	Right upper right	Comp. 944015638
REF.241	Left upper right	Comp. 944015639
REF.242	Left pinion curve	Comp. 944022396
REF.243	Right pinion curve	Comp. 944022397
REF.244	Left front curve	Comp. 944007947
REF.245	Right front curve	Comp. 944007946
REF.246	Long bottom straight	Comp. 944005797
REF.247	Long lateral straight	Comp. 944015929
REF.283	Long lateral straight	Comp. 944015930
REF.541A	KIT 8 PIECES	2x234 2x235 2x236 2x237
REF.522A	KIT 16 PIECES	1x234 1x235 1x236 1x237 2x238 2x239 2x240 2x241 2X242 2X243
REF.541B	KIT 24 PIECES	2x234 2x235 2x236 2x237 2x238 2x239 2x240 2x241 2x242 2x243 2x244 2x245

VL5060, VL5080, VL5090, VL530, VL540, VL550, VL570

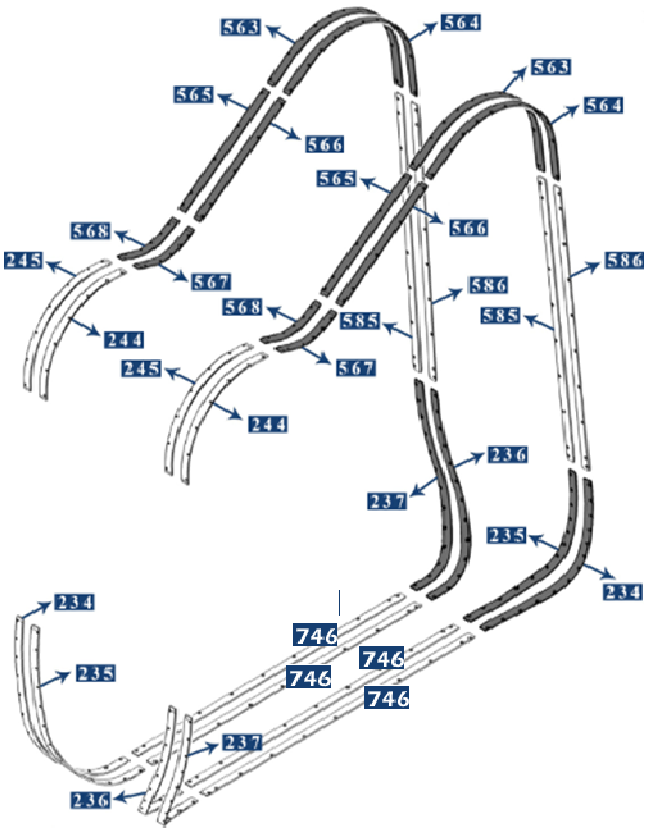

FRONT/REAR

REF.234	Outside right / left	Comp. 944006223
REF.235	Inside left/ right	Comp. 944006222
REF.236	Inside right / left	Comp. 944006220
REF.237	Outside left / right	Comp. 944006221
REF.563	Right rear curve	Comp. 944015982
REF.564	Left rear curve	Comp. 944015983
REF.565	Right upper right	Comp. 944015712
REF.566	Left upper right	Comp. 944015713
REF.567	Left pinion curve	Comp. 944015993
REF.568	Right pinion curve	Comp. 944015994
REF.244	Left front curve	Comp. 944007947
REF.245	Right front curve	Comp. 944007946
REF.746	Bottom straight	Comp. 944009291
REF.585	Long lateral straight	Comp. 944015616
REF.586	Long lateral straight	Comp. 944015617
REF.541A	KIT 8 PIECES	2x234 2x235 2x236 2x237
REF.569	KIT 16 PIECES	1x234 1x235 1x236 1x237 2x563 2x564 2x565 2x566 2x567 2x568
REF.541C	KIT 24 PIECES	2x234 2x235 2x236 2x237 2x563 2x564 2x567 2x568 2x244 2x245

VAT not included
Free EU transport on orders 600€

All trademarks belong to their respective owners and their use is for informational purposes only.

Check Ref. Before.

9090X OLIVE, 10.90X — ANTI - FRICTION STEEL

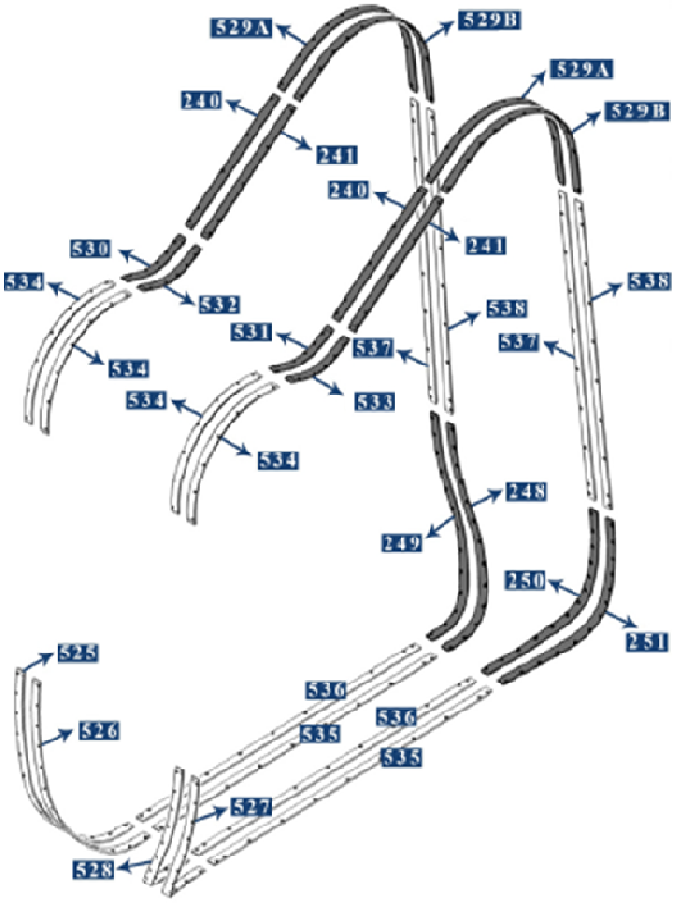

	FRONT	
REF.525	Outside left	Comp. 87486375
REF.526	Inside left	Comp. 87486377
REF.527	Outside right	Comp. 87486376
REF.528	Outside right	Comp. 87486378
	REAR	
REF.248	Inside left	Comp. 944023837
REF.249	Outside left	Comp. 944023838
REF.250	Inside right	Comp. 944023835
REF.251	Outside right	Comp. 944023836
	OTHER	
REF.529A	Right rear curve	Comp. 944020859
REF.529B	Left rear curve	Comp. 944024537
REF.240	Right upper right	Comp. 944015638
REF.241	Left upper right	Comp. 944015639
REF.530	Left pinion curve	Comp. 84391127
REF.531	Left pinion curve	Comp. 84391129
REF.532	Right pinion curve	Comp. 84391128
REF.533	Right pinion curve	Comp. 84391130
REF.534	Front curve	Comp. 84391069
REF.535	Long bottom straight	Comp. 87486373
REF.536	Long bottom straight	Comp. 87486374
REF.537	Long lateral straight	Comp. 944020862
REF.538	Long lateral straight	Comp. 944020863
REF.538B	Straight 2 holes	Comp. 87486371
REF.539	KIT 16 PIECES	
	1x248 1x249 1x250 1x251 2x529A 2x529B 2x240 2x241 1x530 1x531 1x532 1x533	
REF.543A	KIT 8 PIECES	
	1x525 1x526 1x527 1x528 1x248 1x249 1x250 1x251	
REF.543C	KIT 24 PIECES	
	1x525 1x526 1x527 1x528 1x248 1x249 1x250 1x251 2x529A 2x529B 2x240 2x241 1x530 1x531 1x532 1x533 4x534	

FILTER — 9070L, 9050L, 9090X-T4, 9090X-T5, 9090LH-T4, 10.90X, 11.90X

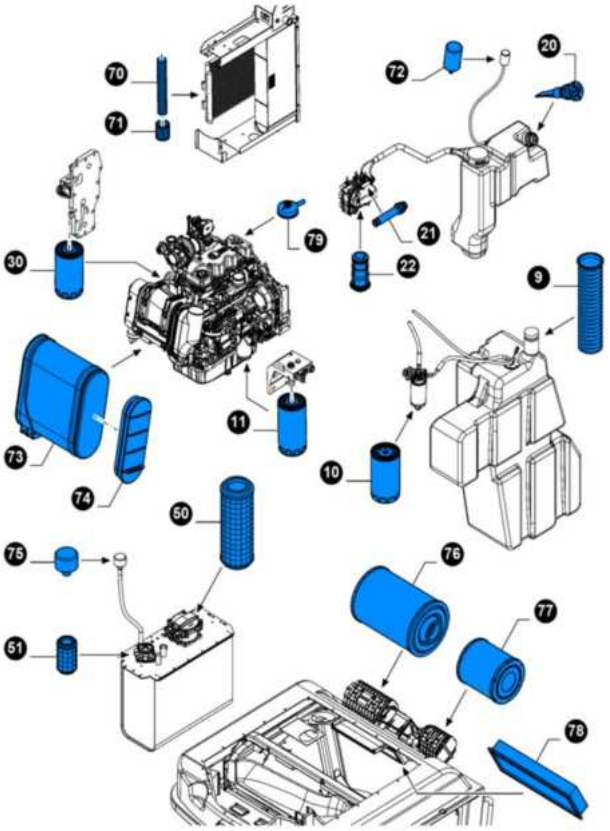

	FUEL	
REF.758A	9 (9) FILTRE GASOIL	Comp. 47385140
REF.758B	10 (10) FILTRE GASOIL	Comp. 84337371,90412128
REF.758C	11 (11) FILTRE GASOIL	Comp. 73332236, 504292579
	OIL	
REF.516C	30 (30) FILTRE GASOIL	Comp. 84228488
	HYDRAULIC	
REF.599A	50 (50) F.HYDRAULIC	Comp. 9964918
REF.758D	51 (51) FILTRE HYDRAULIC	Comp. 47668095
REF.597I	75 (77) F. PULL	Comp. 920018819
	AIR	
REF.758E	70 (70) RECEIVER DRYER	Comp. 47465072
REF.758F	71 47465067 STRAINER	Comp. 47465067
	CABIN	
REF.758G	72 (72) FILTRE VPULL	Comp. 47437399
REF.759H	73 (73) FILTRE AIR	Comp. 87720898
REF.759J	74 (74) FILTRE AIR	Comp. 87720899
REF.759K	76 (76) FILTRE CABIN	Comp. 84604011, 91741833
REF.759L	77 (77) FILTRE CABIN	Comp. 84604009
REF.759M	78 (78) FILTRE CABIN	Comp. 87726699

VAT not included
Free EU transport on orders 600€

All trademarks belong to their respective owners and their use is for informational purposes only.

FILTER — VL (VL600, VL6040, VL6050, VL6060, VL6070, VL6080, VL6090, VL610, VL620, VL630, VL640, VL660)

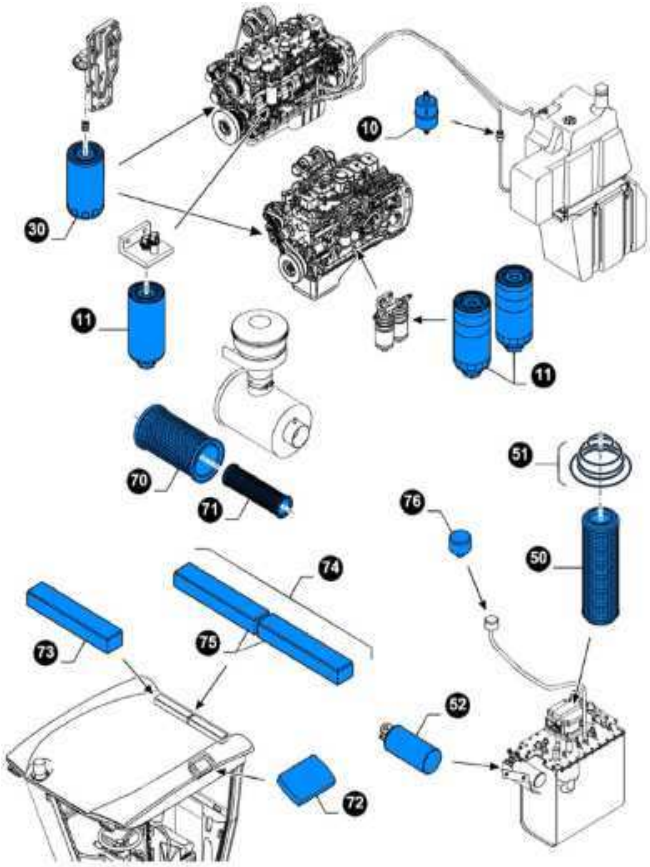

FUEL

REF.515A	10	(10) PRE-FILTER GASOIL	Comp. 87400394, D139225
REF.515B	11	(11) F.GASOIL	Comp. 2852693, 87803192
REF.515C	11	(11) F.GASOIL	Comp. 1902138
REF.515D	11	(11) F.GASOIL	Comp. 84209753, 84526251

OIL

REF.516A	30	(30) F.ENGINE	Comp. 2852526, 87803260
REF.516B	30	(30) F.ENGINE	Comp. 4897898, 84228488

HYDRAULIC

REF.599A	50	(50) F.HYDRAULIC	Comp. 9964918
REF.722A	51	(51) LOCKING RING	Comp. 87547082
REF.599C	52	(52) F. HYDRAUL. RETURN	Comp. 9964728

AIR

REF.597B	70	(70) F. AIR	Comp. 9965158, 1930785
REF.597D	71	(71) F. AIR	Comp. 9965159, 87682972

CABIN

REF.597T	72	(72) F. CABINE	Comp. 84607214
REF.597M	73	(73) F. AIR	Comp. 944028550
REF.597E	74	(74) KIT F. CABINE 2ud	Comp. 713008035
REF.597F	75	(75) F. CABIN CARBON	Comp. 944032451
REF.597G	76	(76) F. PULL	Comp. 920018819

FILTER — (70,71) 9030L, 9040L — (72,73) 9060L, 9080L, 9090L, 9090X, 9090X OLIVE

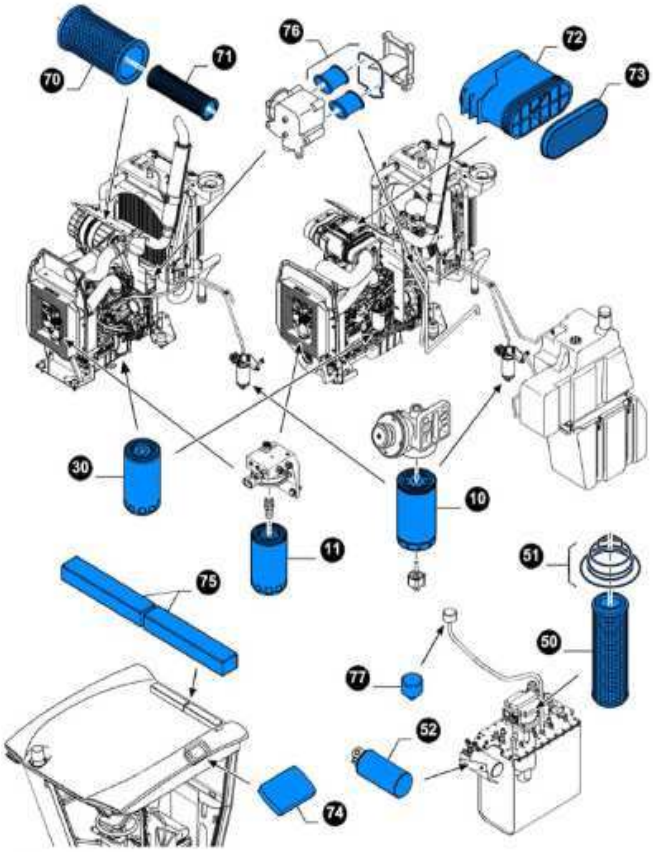

FUEL

REF.515R	10	PRE-FILTRE	Comp. 87533313, 87592170
REF.515S		(10) PRE-FILTRE	Comp. 84337371, 84348882
REF.515T	11	(11) F. GASOIL	Comp. 4897897, 73332236

OIL

REF.516C	30	(30) FILTRE GASOIL	Comp. 84228488

HYDRAULIC

REF.599A	50	(50) F.HYDRAULIC	Comp. 9964918
REF.722A	51	(51) LOCKING RING	Comp. 87547082
REF.599C	52	(52) F. HYDRAUL. RETURN	Comp. 9964728

AIR

REF.597P	70	(70) F. AIR	Comp. 87704244
REF.597Q	71	(71) F. AIR	Comp. 87682992
REF.597R	72	(72) F. AIR	Comp. 87687267
REF.597S	73	(73) F. AIR	Comp. 87687268, 87720899

CABIN

REF.597T	74	(72) F. CABINE	Comp. 84607214
REF.597M	75	(73) F. AIR	Comp. 944028550
REF.597E	75	(74) KIT F. CABINE 2ud	Comp. 713008035
REF.597U	76	(76) FILTRE	Comp. 2992447
REF.597I	77	(77) F. PULL	Comp. 920018819

All trademarks belong to their respective owners and their use is for informational purposes only.

FILTER SB (SB56, SB58, SB60, SB64, SB65)

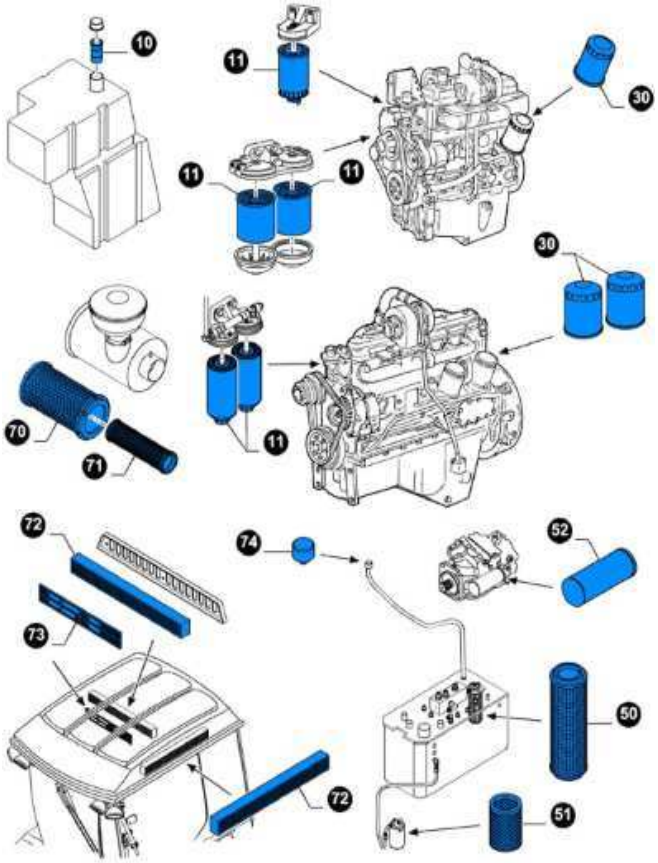

		FUEL	
REF.724A	**10**	(10) ELEMENT	Comp. 944010988=47385140
REF.515H	**11**	(11) F.GASOIL	Comp. 1930010, 471357706, 842214564
REF.515J	**11**	(11) F.GASOIL	Comp. 1909100
REF.516E	**30**	(30) F.ENGINE	Comp. 1931047
		OIL	
REF.516D	**30**	(30) F.ENGINE	Comp. 1909102, 84221215
REF.516F	**30**	(30) F.ENGINE	Comp. 87803260, 84228488
		HYDRAULIC	
REF.599B	**50**	(50) F.HYDRAULIC	Comp. 920018520
REF.599C	**51**	(52) F. HYDRAUL. RETURN	Comp. 9964728
REF.599D	**52**	(52) F.HYDRAULIC	Comp. 920018543
REF.599E	**52**	(52) F.HYDRAULIC	Comp. 920019190
		AIR	
REF.597B	**70**	(70) F. AIR	Comp. 9965158, 1930785
REF.597A	**70**	(70) F. AIR	Comp. 1930784, 87682973
REF.723A	**71**	(71) F. AIR	Comp. 1909964
REF.597C	**71**	(71) F. AIR	Comp. 1930790
REF.597D	**71**	(71) F. AIR	Comp. 9965159, 87682972
		CABIN	
REF.597J	**72**	(72) F.CABIN	Comp. 321750750, 47405000
REF.597K	**72**	(72) F.CABIN CARBON	Comp. 920018705
REF.597L	**73**	(73) F.CABIN	Comp. 9966191
REF.599H	**74**	(74) F.PULL	Comp. 700055604, 84078520
REF.597G	**74**	(76) F. PULL	Comp. 920018819

FILTER VX680

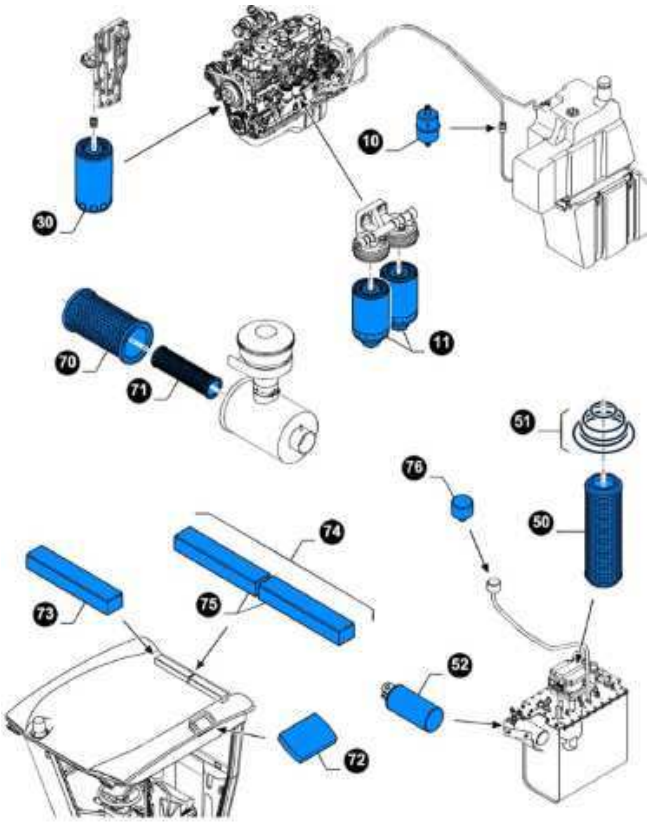

		FUEL	
REF.515A	**10**	(10) PRE-FILTER GASOIL	Comp. 87400394, D139225
REF.515K	**11**	(11) F.GASOIL	Comp. 1902138
		OIL	
REF.516G	**30**	(30) F. ENGINE	Comp. 2852138, 87803260, 84228488
		HYDRAULIC	
REF.599A	**50**	(50) F.HYDRAULIC	Comp. 9964918
REF.722A	**51**	(51) LOCKING RING	Comp. 87547082
REF.599C	**52**	(52) F. HYDRAUL. RETURN	Comp. 9964728
		AIR	
REF.597B	**70**	*(70) F. AIR*	*Comp. 9965158, 1930785*
REF.597D	**71**	*(71) F. AIR*	*Comp. 9965159, 87682972*
		CABIN	
REF.597T	**72**	(72) F. CABINE	Comp. 84607214
REF.597M	**73**	(73) F. AIR	Comp. 944028550
REF.597E	**74**	(74) KIT F. CABINE 2ud	Comp. 713008035
REF.597F	**75**	(75) F. CABIN CARBON	Comp. 944032451
REF.597G	**76**	(76) F. PULL	Comp. 920018819

All trademarks belong to their respective owners and their use is for informational purposes only.

FILTER VX7090

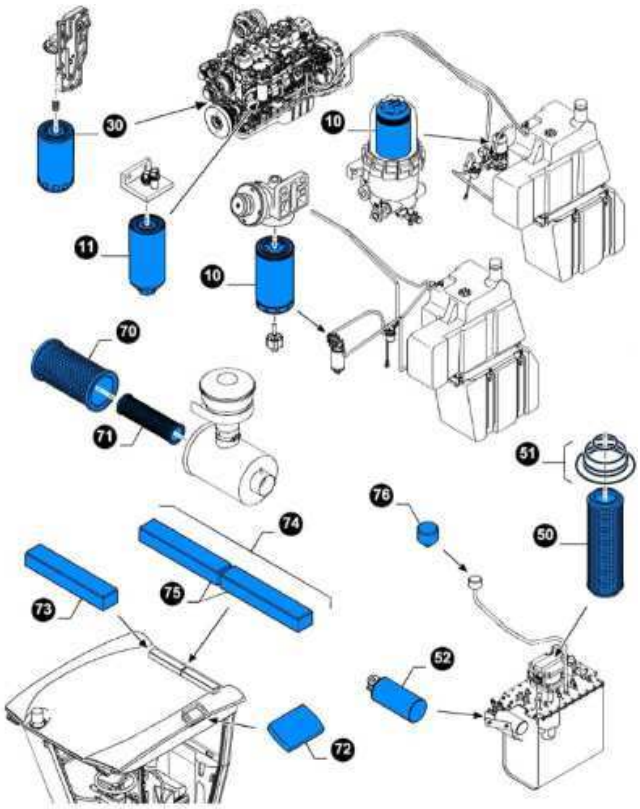

FUEL

REF.515L	10	(10) PRE-FILTRE GASOIL	Comp. 87519301, 87592171
REF.515M	10	(10) PRE-FILTRE GASOIL	Comp. 84283691
REF.515N	11	(11) F. GASOIL	Comp. 2852693
REF.515P	11	(11) F. GASOIL	Comp. 2830348
REF.515Q	11	(11) F. GASOIL	Comp. 84209753, 84526251

OIL

REF.516J	30	(30) F. ENGINE	Comp. 2852526
REF.516B	30	(30) F.ENGINE	Comp. 4897898, 84228488

HYDRAULIC

REF.599A	50	(50) F.HYDRAULIC	Comp. 9964918
REF.722A	51	(51) LOCKING RING	Comp. 87547082
REF.599C	52	(52) F. HYDRAUL. RETURN	Comp. 9964728

AIR

REF.597B	70	*(70) F. AIR*	*Comp. 9965158, 1930785*
REF.597D	71	*(71) F. AIR*	*Comp. 9965159, 87682972*

CABIN

REF.597T	72	(72) F. CABINE	Comp. 84607214
REF.597M	73	(73) F. AIR	Comp. 944028550
REF.597E	74	(74) KIT F. CABINE 2ud	Comp. 713008035
REF.597F	75	(75) F. CABIN CARBON	Comp. 944032451
REF.597G	76	(76) F. PULL	Comp. 920018819

FILTER VX7090 OLIVES

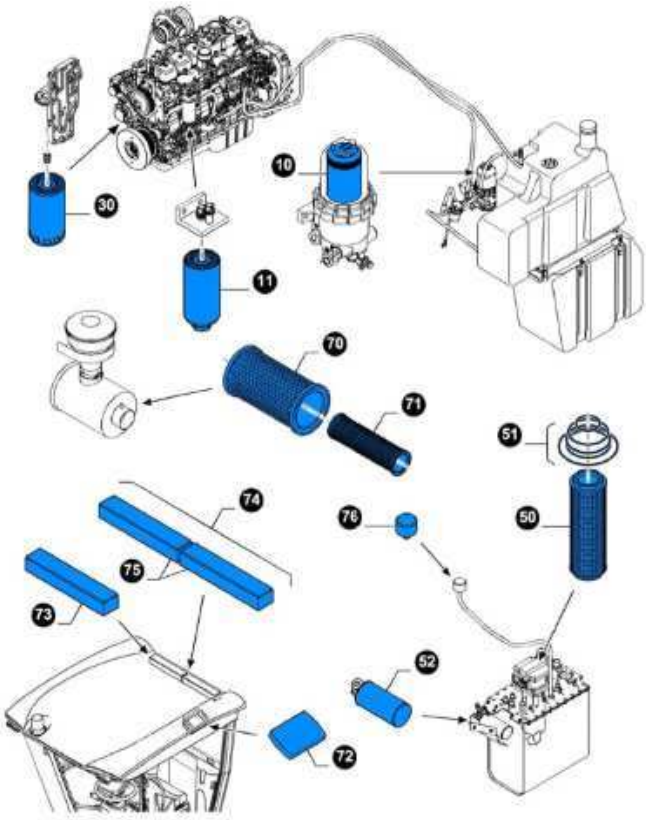

FUEL

REF.515M	10	*(10) PRE-FILTRE GASOIL*	*Comp. 84283691*
REF.515Q	11	(11) F. GASOIL	Comp. 84209753, 84526251

OIL

REF.516B	30	(30) F.ENGINE	Comp. 4897898, 84228488

HYDRAULIC

REF.599A	50	(50) F.HYDRAULIC	Comp. 9964918
REF.722A	51	(51) LOCKING RING	Comp. 87547082
REF.599C	52	(52) F. HYDRAUL. RETURN	Comp. 9964728

AIR

REF.597B	70	*(70) F. AIR*	*Comp. 9965158, 1930785*
REF.597D	71	*(71) F. AIR*	*Comp. 9965159, 87682972*
REF.597T	74	(72) F. CABINE	Comp. 84607214
REF.597M	73	(73) F. AIR	Comp. 944028550
REF.597E	74	(74) KIT F. CABINE 2ud	Comp. 713008035
REF.597F	75	(75) F. CABIN CARBON	Comp. 944032451
REF.597G	76	(76) F. PULL	Comp. 920018819

All trademarks belong to their respective owners and their use is for informational purposes only.

NEW HOLLAND-BRAUD COMPATIBLE

EDUARDO

MANUFACTURE OF NEW REAR DEFLECTORS (transport not included)

1- KIT(2p)

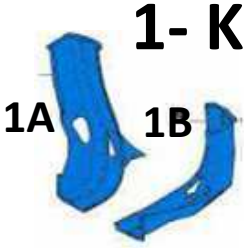

2 -KIT (6p)

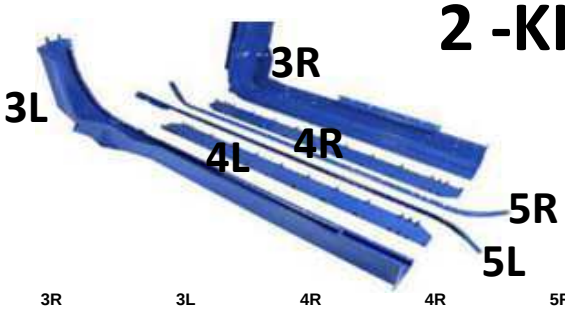

	1 KIT (2p)	1A	1B	2 KIT (6p)	3R	3L	4R	4R	5R	5L
SB53 SB55	REF.703A Comp. 9965152			REF.703BB Comp. 84589810			REF.701F Comp. 944009296	REF.701F Comp. 944009296	REF.701E Comp. 944009292	REF.702D Comp. 944009293
VL600,VL610 VL620,VL640 VL660	REF.706A Comp. 84126212			REF.706B Comp. 47384999			REF.701D Comp. 944005585	REF.701D Comp. 944005585	REF.701C Comp. 944011412	REF.702C Comp. 944011411
7030L	REF.703D Comp. 47857227			REF.702H Comp. 51501337			REF.702J Comp. 51458614	REF.702J Comp. 51458614	REF.702K Comp. 51458607	REF.702L Comp. 51458608
9040L 9060L 9080L	REF.703D Comp. 47857227			REF.705E Comp. 48061238			REF.701D Comp. 944005585	REF.701D Comp. 944005585	REF.701C Comp. 944011412	REF.702C Comp. 944011411
SB56, SB58 SB60,SB62 SB64	REF.703A Comp. 9965152			REF.703B Comp. 84354860			REF.701D Comp. 944005585	REF.701D Comp. 944005585	REF.701C Comp. 944011412	REF.702C Comp. 944011411
VL6040,6050 VL6060,6070 VL6080,6090	REF.706A Comp. 84126212			REF.706B Comp. 47384999			REF.701D Comp. 944005585	REF.701D Comp. 944005585	REF.701C Comp. 944011412	REF.702C Comp. 944011411
7030M	REF.702E Comp. 944032671			REF.702G Comp. 47853093			REF.701F Comp. 944009296	REF.701F Comp. 944009296	REF.701E Comp. 944009292	REF.702D Comp. 944009293
9040M	REF.702M Comp. 84589774			REF.705E Comp. 48061238			REF.701D Comp. 944005585	REF.701D Comp. 944005585	REF.701C Comp. 944011412	REF.702C Comp. 944011411
VL530,VL540 VL540,VL550 VL570,VL5060 VL5080,VL5090	REF.703A Comp. 9965152				REF.701G Comp. 944032672	REF.702E Comp. 944032671	REF.701F Comp. 944009296	REF.701F Comp. 944009296	REF.701E Comp. 944009292	REF.702D Comp. 944009293
SB65 VX7090 VX680	REF.709A Comp. 87629911				REF.707B Comp. 944033616	REF.708B Comp. 944033603	REF.707D Comp. 944020654	REF.707D Comp. 944020654	REF.707C Comp. 944020671	REF.708C Comp. 944020670
9090X OLIVE	REF.709D Comp. 47523030				REF.707H Comp. 87683713	REF.708G Comp. 87683714	REF.707K Comp. 87486388	REF.707L Comp. 87486379	REF.707J Comp. 87486382	REF.708H Comp. 87486381
9090X		REF.708J Comp. 84470410	REF.708K Comp. 84470411		REF.707N Comp. 84470376	REF.708D Comp. 84470377	REF.707F Comp. 944020654	REF.707F Comp. 944020654	REF.707E Comp. 84479820	REF.708E Comp. 84479821

★	1 KIT (2p)	N2	N1	N6	N6	N3	N3	N5	N8	N4	N7
9030L, 9050L 9070L 9090LHT4	REF.703D Comp. 47857227	REF.703E Comp. 87648911	REF.703F Comp. 87648899	REF.701D Comp. 944005585	REF.701D Comp. 944005585	REF.703G Comp. 48106280	REF.703G Comp. 48106280	REF.703H Comp. 47710693	REF.703J Comp. 48106271	REF.703K Comp. 47710692	REF.703L Comp. 48106266
10.90X ★	REF.709D Comp. 47523030	REF.707H Comp. 87683713	REF.708G Comp. 87683714	REF.707K Comp. 87486388	REF.707K Comp. 87486388	REF.704E Comp. 48059576	REF.704E Comp. 48059576	REF.704F Comp. 51408992	REF.704G Comp. 51409006	REF.704H Comp. 48059631	REF.704K Comp. 48059590

1- KIT(2p)

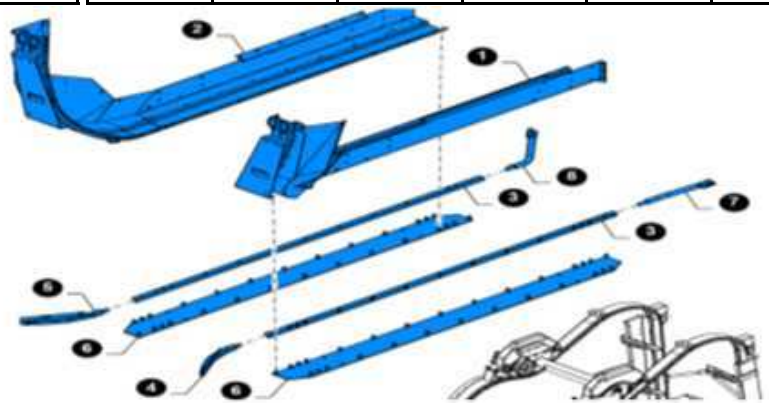

VAT not included

Free EU transport on orders 600€

All trademarks belong to their respective owners and their use is for informational purposes only.

WWW.EDUARDOREPUESTOSAGRICOLAS.COM

SPECIAL SELLING GREASES

LITHIUM GREASE

FOR MANUAL GREASING - FLUIDITY LEVEL "2" (THICK)

REF.401D LITKEN EP2 (with additives EP) (can 5kg)

REF.401E LITKEN EP2 (with additives EP) cartridge 420m.l.

FOR AUTOMATIC LUBRICATION - LEVEL "00" FLUIDS (LIQUID)

REF.401F LITKEN EP00 (with additives EP) (can 5kg)

FOOD GREASE

FOR MANUAL GREASING - FLUIDITY LEVEL "2" (THICK)

REF.407B ULTRAPLEX FG2 (can 5kg)

REF.403D ULTRAPLEX FG2 cartridge 420m.l

FOR AUTOMATIC LUBRICATION - LEVEL "00" FLUIDS (LIQUID)

REF.407E ULTRAPLEX FG00 (can 5kg)

REF.514B ANTIFREEZE AMBRA AGRIFULL OT PREMIX (>2010) 5L
AGRIFULL OT PREMIX 5 l
<2010 Comp. 77411MH2EU

OILS

REF.512A ENGINE OIL AMBRA MASTERGOLD HSP 5L
MASTERGOLD HSP 5 l
<2018 Comp74514MH2EU
HSP SAE 15W - 40NH 330 HSP

REF.512B ENGINE OIL AMBRA MASTERGOLD HSP 20L
MASTERGOLD HSP 20 l
<2018 Comp 74514RH1EU
HSP SAE 15W - 40NH 330 HSP

REF.512C ENGINE OIL UNITEK 10W-40 5L
MASTERGOLD HSP 20 l
>2018 Comp 7466MH2EU
HSP SAE 10W - 40NH 330 HSP

REF.512D ENGINE OIL UNITEK 10W-40 20L
MASTERGOLD HSP 20 l
>2018 Comp 74664RH1EU
HSP SAE 10W - 40NH 330 HSP

REF.513A HYDRAULIC OIL AMBRA HYDROSYSTEM 68
20L

REF.513H HYDRAULIC OIL AMBRA HYDROSYSTEM 68
5L

REF.514A ANTIFREEZE AMBRA AGRIFLU 5L
AGRIFLU MIX 5 l
<2010 Comp 77413MH2EU

All trademarks belong to their respective owners and their use is for informational purposes only.

Check Ref. Before.

WWW.EDUARDOREPUESTOSAGRICOLAS.COM

VAT not included

Free EU transport on orders 600€

GREGOIRE COMPATIBLE

EDUARDO

REF.106D

MEDIUM YMOULD. ARC TIE-ROD 1.125 mm. D25 YELLOW

Comp. 265675

GMM, G60, G60I, G70, G70A, G71, G80, G85, G86, G90, G103, G104, G105, G106, G107, G110, G114, G115, G116, G117, G135 V, G2.220, G2.230, G4.220, G6.200, G6.210, G7.210, G7.220

REF.106E

MEDIUM MOULD. ARC TIE-ROD 1.125 mm. D25 BLACK

Comp. 265785

G MM, G 60, G 60 I, G 70, G 70 A, G 71, G80, G 85, G 86, G 90, G 103, G 104, G 105, G 106, G 107, G 110, G 114, G 115, G 116, G 117, G 135 V, G2.220, G2.230, G4.220, G6.200, G6.210, G7.210, G7.220,

REF.106F

SHORT YMOULD. ARC TIE-ROD 1.169 mm. D25 YELLOW

Comp. 265739

G3.230, G3.230,G3.250

REF.106G

SHORT MOULD. ARC TIE-ROD 1.169 mm. D25 BLACK

Comp. 265796

G3.230, G3.230,G3.250

REF.107D

LONG MOULD. ARC TIE-ROD 1330MM D25 YELLOW

Comp. 265617

G120, G122, G125, G130, G132, G132BC, G151, G152, G152BC, G152I, G160, G170, G7.240, G8.260, G8.270

REF.107E

LONG MOULD. ARC TIE-ROD 1330MM D25 BLACK

Comp. 265789

G120, G121, G122, G125, G130, G132, G132BC, G151, G152, G152BC, G152I, G160, G170, G7.240, G8.260, G8.270

REF.108F

SHORT YELLOW MOULD. ARC TIE-ROD D25 (859x871)

Comp. 265682

G50, G50A, G55H, G55I, G55VH, G56 I, G.Prima, G1.190, G1.200,

REF.108G

SHORT BLACK MOULD. ARC TIE-ROD D25 (859x871)

Comp. 265792

G 50, G 50 A, G 55 H, G 55 I, G 55 VH, G 56 I, G.Prima, G1.190, G1.200,

REF.113D

ROUND SHAKING ROD LENGTH D28 1.325 mm

Comp. 265510

G65 ,G66, G120SW, G140SW(D28), G167, G240, G9.320, G9.330,G 91, GX9(<2022), G10.330, G9.330 OLIVES

REF.113H

ROUND SHAKING ROD LENGTH BLACK D28 1.325 mm

Comp. 265794

G65, G66, G140SW(D28),G167, G240,G9.320, G9.330, GX9 (<2022)

REF.155A

CATCHER TRAY TIGHENING PLATE

Comp. -

GMM, G60, G60I, G70, G70A, G71, G80, G85, G86, G90, G103, G104, G105, G106, G107, G110, G114, G115, G116, G117, G135V, G2.220, G2.230, G4.220, G6.200, G6.210, G7.210, G7.220, G 120, G 121, G 122, G 125, G 130, G 132, G 132 BC, G 151, G 152, G 152 BC, G 152 I, G 160, G 170, G7.240, G8.260, G8.270, G 50, G 50 A,

REF.148A

FLEXIBLE MOUNTING 40X28XM10 ENDLESS SUPPORT

Comp. -

REF.118C

ROD HODER HALF CLAMP D35 KIT 2 screws, 2 nuts and 2 washers Ø25

Comp. 203058

GMM, G60, G60I, G70, G70A, G71, G80, G85, G86, G90, G103, G104, G105, G106, G107, G110, G114, G115, G116, G117, G135V, G2.220, G2.230, G4.220, G6.200, G6.210, G7.210, G7.220, G120, G121, G122, G125, G130, G132, G132 BC, G151, G152, G152BC, G152I, G160, G170, G7.240, G8.260, G8.270, G50, G50A, G55H, G55I, G55VH, G56I, G.Prima, G1.190, G1.200

REF.108E

YELLOW FORMED ARC TIE-ROD D25

Comp. 265020

G50, G50A, G55H, G55I, G55VH, G56I, G.Prima, G1.190, G1.200,

REF.119A

ROD HOLDER SUPPORT D25 R.H.

Comp. 120462

GMM, G60, G60I, G70, G70A, G71, G80, G85, G86, G90, G103, G104, G105, G106, G107, G110, G114, G115, G116, G117, G135V, G2.220, G2.230, G4.220, G6.200, G6.210, G7.210, G7.220, G120, G121, G122, G125, G130, G132, G132 BC, G151, G152, G152BC, G152I, G160, G170, G7.240, G8.260, G8.270, G50, G50A, G55H, G55I, G55VH, G56I, G.Prima, G1.190, G1.200

REF.120A

ROD HOLDER SUPPORT D25 L.H.

Comp. 120463

G MM, G 60, G 60 I, G 70, G 70 A, G 71, G80, G 85, G 86, G 90, G 103, G 104, G 105, G 106, G 107, G 110, G 114, G 115, G 116, G 117, G 135 V, G2.220, G2.230, G4.220, G6.200, G6.210, G7.210, G7.220, G 120, G 121, G 122, G 125, G 130, G 132, G 132 BC, G 151, G 152, G 152 BC, G 152 I, G 160, G 170, G7.240, G8.260, G8.270, G 50, G 50 A, G 55 H, G 55 I, G 55 VH, G 56 I, G.Prima, G1.190, G1.200,

REF.171A

DRIVING SHAFT

Comp. -

G 103, G 104, G 105, G 106, G 107, G 108, G 10X, G 114, G 115, G 117, G 120 SD, G 120SW, G 121, G 122, G 125, G 130, G 132, G 133V, G 135 V, G 13X, G 140SW, G 152, G 167, G 170, G 175V, G 6.200, G 6.210, G 60, G 7.220, G 7.240, G 70, G 71, G 8.260, G 8.270, G 84, G 86, G 9.320, G 90

REF.123A

ROD HOLDER SUPPORT D28 R.H.

Comp. 121461

G65, G66, G120SW, G140SW, G167, G240, G9.320, G9.330, G9.330 Olive, G10.330

REF.124A

ROD HOLDER SUPPORT D28 L.H.

Comp. 121462

G65, G66, G120SW, G140SW, G167, G240, G9.320, G9.330, G9.330 Olive, G10.330

REF.109A

PULLEY SCRAPER 70X30X8,2mm

Comp. 265005

G103, G104, G105, G106, G107, G108, G10X, G114, G 115, G117, G120SD, G120SW, G121, G122, G125, G130, G132, G133V, G135V, G13X, G140SW, G152, G167, G170, G175V, G6.200, G6.210, G60, G7.220, G7.240, G70, G71, G8.260, G8.270, G84, G86, G9.320, G90

Check Ref. Before.

All trademarks belong to their respective owners and their use is for informational purposes only.

WWW.EDUARDOREPUESTOSAGRICOLAS.COM

VAT not included

Free EU transport on orders 600€

GREGOIRE COMPATIBLE

EDUARDO

REF.101D

CATCHER TRAY R.H. (417x224)

Comp. 155083

G MM, G 60, G 60 I, G 70, G 70 A, G 71, G80, G 85, G 86, G 90, G 103, G 104, G 105, G 106, G 107, G 110, G 114, G 115, G 116, G 117, G 135 V, G2.220, G2.230, G4.220, G6.200, G6.210, G7.210, G7.220, G 120, G 121, G 122, G 125, G 130, G 132, G 132 BC, G 151, G 152, G 152 BC, G 152 I, G 160, G 170, G7.240, G8.260, G8.270, G 50, G 50 A, G 55 H, G 55 I, G 55 VH, G 56 I, G.Prima, G1.190, G1.200,

REF.102D

CATCHER TRAY L.H. (417x224)

Comp. 155084

G MM, G 60, G 60 I, G 70, G 70 A, G 71, G80, G 85, G 86, G 90, G 103, G 104, G 105, G 106, G 107, G 110, G 114, G 115, G 116, G 117, G 135 V, G2.220, G2.230, G4.220, G6.200, G6.210, G7.210, G7.220, G 120, G 121, G 122, G 125, G 130, G 132, G 132 BC, G 151, G 152, G 152 BC, G 152 I, G 160, G 170, G7.240, G8.260, G8.270, G 50, G 50 A, G 55 H, G 55 I, G 55 VH, G 56 I, G.Prima, G1.190, G1.200,

REF.103A

CATCHER TRAY STIFFENER 15°- THICKNESS 10

Comp. 155018

G MM, G 60, G 60 I, G 70, G 70 A, G 71, G80, G 85, G 86, G 90, G 103, G 104, G 105, G 106, G 107, G 110, G 114, G 115, G 116, G 117, G 135 V, G2.220, G2.230, G4.220, G6.200, G6.210, G7.210, G7.220, G 120, G 121, G 122, G 125, G 130, G 132, G 132 BC, G 151, G 152, G 152 BC, G 152 I, G 160, G 170, G7.240, G8.260, G8.270, G 50, G 50 A, G 55 H, G 55 I, G 55 VH, G 56 I, G.Prima, G1.190, G1.200,

REF.400A*

YELLOW PAINT (0,4L SPRAY)

Comp. 245242

G103, G104, G105, G106, G107, G108, G10X, G114, G 115, G117, G120SD, G120SW, G121, G122, G125, G130, G132, G133V, G135V, G13X, G140SW, G152, G167, G170, G175V, G6.200, G6.210, G60, G7.220, G7.240, G70, G71, G8.260, G8.270, G84, G86, G9.320, G90

REF.128B

FLEXIBLE CATCHER TRAY SUP. LH

Comp. 203074

G65, G66, G120SW, G140SW, G167, G240, G9.320, G9.330, G9.330 OLIVE, G10.330

REF.128A

FLEXIBLE CATCHER TRAY SUP. RH

Comp. 203073

G65, G66, G120SW, G140SW, G167, G240, G9.320, G9.330, G9.330 OLIVE, G10.330

REF.105D

CATCHER TRAY STIFFENER

Comp. -

GT1, GT3, GL6.4, GL7, GL8, GX8

REF.151A

CONVEYOR BELT TIGHTNESS TOOL

Comp. 203014

G103, G104, G105, G106, G107, G108, G10X, G114, G 115, G117, G120SD, G120SW, G121, G122, G125, G130, G132, G133V, G135V, G13X, G140SW, G152, G167, G170, G175V, G6.200, G6.210, G60, G7.220, G7.240, G70, G71, G8.260, G8.270, G84, G86, G9.320, G90

REF.111B

KW CATCHER TRAY L.H. (580x263)

Comp. 155128

G 103, G 104, G 105, G 106, G 107, G 108, G 10X, G 114, G 115, G 117, G 120 SD, G 120SW, G 121, G 122, G 125, G 130, G 132, G 133V, G 135 V, G 13X, G 140SW, G 152, G 167, G 170, G 175V, G 6.200, G 6.210, G 60, G 7.220, G 7.240, G 70, G 71, G 8.260, G 8.270, G 84, G 86, G 9.320, G 90

REF.112B

KW CATCHER TRAY R.H. (580x263)

Comp. 155127

G 103, G 104, G 105, G 106, G 107, G 108, G 10X, G 114, G 115, G 117, G 120 SD, G 120SW, G 121, G 122, G 125, G 130, G 132, G 133V, G 135 V, G 13X, G 140SW, G 152, G 167, G 170, G 175V, G 6.200, G 6.210, G 60, G 7.220, G 7.240, G 70, G 71, G 8.260, G 8.270, G 84, G 86, G 9.320, G 90

REF.118D

ROD HODER HALF CLAMP D40 KIT 2 screws, 2 nuts and 2 washers Ø28

Comp. 175017

G 65, G 66, G 120 SW, G 140 SW, G 167, G 240, G9.320, G9.330, G9.330 Olive, G10.330,

REF.128E

M16

SCREW M16 X110 ZN 8,8 narrow head WHASERS M16 ZN NUTS WITH AUTO BRAKE M16 ZN

Comp. (65069+388025+65016)

G65, G66, G120SW, G140SW, G167, G240, G9.320, G9.330, G9.330 OLIVE, G10.330

REF.197A

M8

SCREW AND NUT M8 X40 (ROD HOLDER-SHAKER)

Comp. 060023, 060003

G MM, G 60, G 60 I, G 70, G 70 A, G 71, G80, G 85, G 86, G 90, G 103, G 104, G 105, G 106, G 107, G 110, G 114, G 115, G 116, G 117, G 135 V, G2.220, G2.230, G4.220, G6.200, G6.210, G7.210, G7.220, G 120, G 121, G 122, G 125, G 130, G 132, G 132 BC, G 151, G 152, G 152 BC, G 152 I, G 160, G 170, G7.240, G8.260, G8.270, G 50, G 50 A, G 55 H, G 55 I, G 55 VH, G 56 I, G.Prima, G1.190, G1.200,

REF.197B

M10

KIT 2 SCREWS M10X30, 2 NUTS AND 2 WASHERS (rod holder to column)

Comp. 065393, 065078,

G MM, G 60, G 60 I, G 70, G 70 A, G 71, G80, G 85, G 86, G 90, G 103, G 104, G 105, G 106, G 107, G 110, G 114, G 115, G 116, G 117, G 135 V, G2.220, G2.230, G4.220, G6.200, G6.210, G7.210, G7.220, G 120, G 121, G 122, G 125, G 130, G 132, G 132 BC, G 151, G 152, G 152 BC, G 152 I, G 160, G 170, G7.240, G8.260, G8.270, G 50, G 50 A, G 55 H, G 55 I, G 55 VH, G 56 I, G.Prima, G1.190, G1.200,

REF.197C

M10

KIT 2 SCREWS 8,8 M10x65, 2 SPECIAL NUTS, 2 WHASERS (ROD HOLDER D35 TO COLUMN). Al, Ø25

Comp. 065394,065013,065078

G MM, G 60, G 60 I, G 70, G 70 A, G 71, G80, G 85, G 86, G 90, G 103, G 104, G 105, G 106, G 107, G 110, G 114, G 115, G 116, G 117, G 135 V, G2.220, G2.230, G4.220, G6.200, G6.210, G7.210, G7.220, G 120, G 121, G 122, G 125, G 130, G 132, G 132 BC, G 151, G 152, G 152 BC, G 152 I, G 160, G 170, G7.240, G8.260, G8.270, G 50, G 50 A, G 55 H, G 55 I, G 55 VH, G 56 I, G.Prima, G1.190, G1.200,

REF.197D

M12

KIT: 2 SCREWS 8,8M12x90, 2 SPECIAL NUTS, 2 WHASERS (ROD HOLDER D40 TO COLUMN). Al, Ø28

Comp. 065828,065014,065689

G MM, G 60, G 60 I, G 70, G 70 A, G 71, G80, G 85, G 86, G 90, G 103, G 104, G 105, G 106, G 107, G 110, G 114, G 115, G 116, G 117, G 135 V, G2.220, G2.230, G4.220, G6.200, G6.210, G7.210, G7.220, G 120, G 121, G 122, G 125, G 130, G 132, G 132 BC, G 151, G 152, G 152 BC, G 152 I, G 160, G 170, G7.240, G8.260,

REF.197E

M10

KIT 2 SCREWS M10x45, 2 NUTS ET 2 WASHERS (rod holder to column)

Comp. 065276, 065078,

G 65, G 66, G 120 SW, G 140 SW, G 167, G 240, G9.320, G9.330, G9.330 Olive, G10.330,

REF.197F

M8

KIT 2 SCREWS M8x55 et M8x45, 2 NUTS AND 2 WASHERS

Comp. 065300 (8x45),

G MM, G 60, G 60 I, G 70, G 70 A, G 71, G80, G 85, G 86, G 90, G 103, G 104, G 105, G 106, G 107, G 110, G 114, G 115, G 116, G 117, G 135 V, G2.220, G2.230, G4.220, G6.200, G6.210, G7.210, G7.220, G 120, G 121, G 122, G 125, G 130, G 132, G 132 BC, G 151, G 152, G 152 BC, G 152 I, G 160, G 170, G7.240, G8.260, G8.270, G 50, G 50 A, G 55 H, G 55 I, G 55 VH, G 56 I, G.Prima, G1.190, G1.200,

VAT not included

Free EU transport on orders 600€

All trademarks belong to their respective owners and their use is for informational purposes only.

WWW.EDUARDOREPUESTOSAGRICOLAS.COM

Check Ref. Before.

GREGOIRE COMPATIBLE

EDUARDO

REF.110A

BELT 11 METERS without AGRAFE INOX(320mm) WITHOUT SHIPMENT

Comp. -

GMM, G55M, G55H, G60, G60KW, G70, G90, G104, G106, G107, G108, G110, G114, G115, G117, G120, G122, G125, G132 2B, G132BC, G152 2B, GPrima, G1.180, G1.190, G1.200, G2.220, G2.230, G3.220, G3.230, G3.250, G6.200, G6.210, G7.210, G7.220, G7.240, G8.260

REF.110B

BELT BY THE METER (320mm) WITHOUT SHIPMENT

Comp. 285916

GM 420, PMS, 301 BC, MINI 3, GMM, G 55 M, G 55 H, G 60, G 60 KW, G 65, G 66, G 70, G 90, G 104, G 106, G 107, G 108, G 110, G 114, G 115, G 117, G 120, G 120 K, G 120 KW, G 120 SW, G 122, G 125, G 130, G 132 2B, G 132 BC, G 133, G 134, G 140 SW, G 152 2B, G 152 BC, G 152 I, G 160, G 167, G 170, G 240 , G Prima, G1.180, G1.190, G1.200, G2.220, G2.230, G3.220, G3.230, G3.250, G6.200, G6.210, G7.210, G7.220, G7.240, G8.260

REF.340B

FASTENER ASSY. AR STAINLESS L320 with screws

Comp. 24005

GMM, G55M, G55H, G60, G60KW, G70, G90, G104, G106, G107, G108, G110, G114, G115, G117, G120, G122, G125, G132 2B, G132BC, G152 2B, GPrima, G1.180, G1.190, G1.200, G2.220, G2.230, G3.220, G3.230, G3.250, G6.200, G6.210, G7.210, G7.220, G7.240, G8.260

REF.340C

FASTENER ASSY. AR STAINLESS L320 with Cu nails

Comp. 24005

GMM, G55M, G55H, G60, G60KW, G70, G90, G104, G106, G107, G108, G110, G114, G115, G117, G120, G122, G125, G132 2B, G132BC, G152 2B, GPrima, G1.180, G1.190, G1.200, G2.220, G2.230, G3.220, G3.230, G3.250, G6.200, G6.210, G7.210, G7.220, G7.240, G8.260

REF.110C*

BELT 11 METERS without AGRAFE INOX(240mm) WITHOUT SHIPMENT

Comp. -

PMME, PMM85, PMM86, G50E, G50A, G50H, G50M, G70AL, G70E, G71, G71E, G80, G85, G86, G103, G105, G135, G4.220

REF.110D

BELT BY THE METER (240mm) WITHOUT SHIPMENT

Comp. 285123

PMME, PMM85, PMM86, G50E, G50A, G50H, G50M, G70AL, G70E, G71, G71E, G80, G85, G86, G103, G105, G135, G4.220

REF.340A

FASTENER ASSY. AR STAINLESS L240 with screws

Comp. 24018

PMME, PMM85, PMM86, G50E, G50A, G50H, G50M, G70AL, G70E, G71, G71E, G80, G85, G86, G103, G105, G135, G4.220

REF.340D

FASTENER ASSY. AR STAINLESS L240 with Cu nails

Comp. 24018

PMME, PMM85, PMM86, G50E, G50A, G50H, G50M, G70AL, G70E, G71, G71E, G80, G85, G86, G103, G105, G135, G4.220

REF.110E

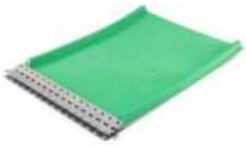

BELT BY THE METER (320mm) (WITH 2 LATERALS PROFILS) OLIVES. WITHOUT SHIPMENT

Comp. 285919

GM240, G65, G66, G67, G120SW, G140SW, G170

REF.145A

FASTENER PIN - STAINLESS D5 L240

Comp. 24019

PMME, PMM85, PMM86, G50E, G50A, G50H, G50M, G70AL, G70E, G71, G71E, G80, G85, G86, G103, G105, G135, G4.220

REF.145B

FASTENER PIN - STAINLESS D5 L320

Comp. 24004

GMM, G55M, G55H, G60, G60KW, G70, G90, G104, G106, G107, G108, G110, G114, G115, G117, G120, G122, G125, G132 2B, G132BC, G152 2B, GPrima, G1.180, G1.190, G1.200, G2.220, G2.230, G3.220, G3.230, G3.250, G6.200, G6.210, G7.210, G7.220, G7.240, G8.260

REF.351D

COPPER NAILS WITH TIP (3,9x24 mm)

Comp. 950104

G103, G104, G105, G106, G107, G108, G10X, G114, G 115, G117, G120SD, G120SW, G121, G122, G125, G130, G132, G133V, G135V, G13X, G140SW, G152, G167, G170, G175V, G6.200, G6.210, G60, G7.220, G7.240, G70, G71, G8.260, G8.270, G84, G86, G9.320, G90

REF.154C

UPPER CLEANER CONVEYOR BELT 910x360mm+fastener

Comp. 285193

G103, G104, G105, G106, G107, G108, G10X, G114, G 115, G117, G120SD, G120SW, G121, G122, G125, G130, G132, G133V, G135V, G13X, G140SW, G152, G167, G170, G175V, G6.200, G6.210, G60, G7.220, G7.240, G70, G71, G8.260, G8.270, G84, G86, G9.320, G90

REF.339R

STAPLE RS125 inox steel (1,2m)

Comp. -

G103, G104, G105, G106, G107, G108, G10X, G114, G 115, G117, G120SD, G120SW, G121, G122, G125, G130, G132, G133V, G135V, G13X, G140SW, G152, G167, G170, G175V, G6.200, G6.210, G60, G7.220, G7.240, G70, G71, G8.260, G8.270, G84, G86, G9.320, G90

REF.339S

STAPLE RS125 inox steel (1m) for nails

Comp. 24020

G103, G104, G105, G106, G107, G108, G10X, G114, G 115, G117, G120SD, G120SW, G121, G122, G125, G130, G132, G133V, G135V, G13X, G140SW, G152, G167, G170, G175V, G6.200, G6.210, G60, G7.220, G7.240, G70, G71, G8.260, G8.270, G84, G86, G9.320, G90

REF.351C

COPPER NAILS WITH TIP (2,1x17 mm)

Comp. -

G103, G104, G105, G106, G107, G108, G10X, G114, G 115, G117, G120SD, G120SW, G121, G122, G125, G130, G132, G133V, G135V, G13X, G140SW, G152, G167, G170, G175V, G6.200, G6.210, G60, G7.220, G7.240, G70, G71, G8.260, G8.270, G84, G86, G9.320, G90

REF.154J

UPPER CLEANER CONVEYOR BELT 1060X550 mm+fastener

Comp. 285970

G9

REF.154K

UPPER CLEANER CONVEYOR BELT 900X500 mm+fastener

Comp. 285906

G8

REF.187A

SHAKER SUPPORT PLATE

Comp. 385182

G103, G104, G105, G106, G107, G108, G10X, G114, G 115, G117, G120SD, G120SW, G121, G122, G125, G130, G132, G133V, G135V, G13X, G140SW, G152, G167, G170, G175V, G6.200, G6.210, G60, G7.220, G7.240, G70, G71, G8.260, G8.270, G84, G86, G9.320, G90

Check Ref. Before.

All trademarks belong to their respective owners and their use is for informational purposes only.

WWW.EDUARDOREPUESTOSAGRICOLAS.COM

VAT not included

Free EU transport on orders 600€

GREGOIRE COMPATIBLE

EDUARDO

REF.180A

BUCKET WIDTH 240 MM BELT OLIVE G140,G120,G9

Comp. 265287

G 65, G 66, G 67, G 120 SW, G 133, G 134, G 140 SW, G 170, G 240, G.8270, G9.320, G9.330 V

REF.180B

BUCKET OF 240 MM BELT OF 320 MM

Comp. 265279

GM420, PMS, 301 BC, MINI 3, GMM, G 55 M, G 55 H, G 60, G 60 KW, G 70, G 90, G 104, G 106, G 107, G 108, G 110, G 114, G 115, G 117, G 120, G 120 K, G 120 KW, G 122, G 125, G 130, G 132 2B, G 132 BC, G 152 2B, G 152 BC, G 152 I, G 160, G 167, G 170, GPrima, G1.180, G1.190, G1.200, G2.220, G2.230, G3.220,

REF.180D

BUCKET OF 160 MM BELT OF 240 MM

Comp. 265278

PMME, PMM85, PMM86, G50E, G50A, G50H, G50M, G70AL, G70E, G71, G71E, G80, G85, G86, G103, G105, G135, G4.220

REF.121B

SCREW + NUT + WASHER M8X30

Comp. 060062

PMME, PMM, GMM, G 50, G 50 A, G 50 E, G 55 H, G 55 I, G 55 VH, G 56 I, G 60, G 60 I, G 60 KW, G 60 WH, G 65, G 66, G 70, G 70 A, G 71, G 80, G 84, G 85, G 86, G 90, G 103, G 104, G 105, G 106, G 107, G 108, G 110, G 114, G 115, G 116, G 117, G 120, G 120 SW, G 121, G 122, G 125, G 130, G 132, G 132 BC, G 135V, G 140 SW, G 151, G 152, G 152 BC, G 152 I, G 160, G 167, G 170, G 175 V, G 240, G Prima, G1.190, G1.200, G2.220, G2.230, G3.220, G3.230, G3.250, G4.200, G4.210, G4.220, G5.310, G5.320, G6.200, G6.210, G7.200, G7.210, G7.220, G7.240, G8.260, G8.270, G9.320, G9.330, G10.330, G10.380, GL7.4, GL8, GX8, GM7.4

REF.185C

INOX 40X305X5MM

Comp. 345342

G120, G140SW

REF.185A

BUCKET FIXING PLATE

Comp. 345594

GM420, PMS, 301 BC, MINI 3, GMM, G 55 M, G 55 H, G 60, G 60 KW, G 70, G 90, G 104, G 106, G 107, G 108, G 110, G 114, G 115, G 117, G 120, G 120 K, G 120 KW, G 122, G 125, G 130, G 132 2B, G 132 BC, G 152 2B, G 152 BC, G 152 I, G 160, G 167, G 170, GPrima, G1.180, G1.190, G1.200, G2.220, G2.230, G3.220, G3.230, G3.250, G6.200, G6.210, G7.210, G7.220, G7.240, G8.260, G8.270,

REF.185B

BUCKET FIXING PLATE

Comp. 346272

PMME, PMM85, PMM86, G50E, G50A, G50H, G50M, G70AL, G70E, G71, G71E, G80, G85, G86, G103, G105, G135, G4.220

REF.153K

¡ NUEVO !

SIDE EXIT BIB

Comp. 285632

PMME, PMM, GMM, G50, G50A, G50E, G55H, G55I, G55VH, G56I, G60, G60I, G60KW, G60WH, G65, G66, G70, G70A, G71, G80, G84, G85, G86, G90, G103, G104, G105, G106, G107, G108, G110, G114, G115, G116, G117, G120, G120SW, G121, G122, G125, G130, G132, G132 BC, G135V, G140 SW, G151, G152, G152BC, G152I, G160, G167, G170, G175 V, G240, GPrima, G1.190, G1.200, G2.220, G2.230, G3.220, G3.230, G3.250, G4.200, G4.210, G4.220, G5.310, G5.320, G6.200, G6.210, G7.200, G7.210, G7.220, G7.240, G8.260, G8.270, G9.320, G9.330, G10.330, G10.380, GL7.4, GL8, GX8, GM7.4

REF.153E

RIGHT LOWER FRONT FLAP, 3 PLIES-4,2MM GREEN

Comp. 285005

PMME, PMM, GMM, G50, G50A, G50E, G55H, G55I, G55VH, G56I, G60, G60I, G60KW, G60WH, G65, G66, G70, G70A, G71, G80, G84, G85, G86, G90, G103, G104, G105, G106, G107, G108, G110, G114, G115, G116, G117, G120, G120SW, G121, G122, G125, G130, G132, G132 BC, G135V, G140 SW, G151, G152, G152BC, G152I, G160, G167, G170, G175 V, G240, GPrima, G1.190, G1.200, G2.220, G2.230, G3.220, G3.230, G3.250, G4.200, G4.210, G4.220, G5.310, G5.320, G6.200, G6.210, G7.200, G7.210, G7.220, G7.240, G8.260, G8.270, G9.320, G9.330, G10.330, G10.380, GL7.4, GL8, GX8, GM7.4

REF.153F

LEFT LOWER FRONT FLAP, 3 PLIES-4,2MM GREEN

Comp. 285006

PMME, PMM, GMM, G50, G50A, G50E, G55H, G55I, G55VH, G56I, G60, G60I, G60KW, G60WH, G65, G66, G70, G70A, G71, G80, G84, G85, G86, G90, G103, G104, G105, G106, G107, G108, G110, G114, G115, G116, G117, G120, G120SW, G121, G122, G125, G130, G132, G132 BC, G135V, G140 SW, G151, G152, G152BC, G152I, G160, G167, G170, G175 V, G240, GPrima, G1.190, G1.200, G2.220, G2.230, G3.220, G3.230, G3.250, G4.200, G4.210, G4.220, G5.310, G5.320, G6.200, G6.210, G7.200, G7.210, G7.220, G7.240, G8.260, G8.270, G9.320, G9.330, G10.330, G10.380, GL7.4, GL8, GX8, GM7.4

REF.153H

REAR FLAP 320X400mm

Comp. 285012

PMME, PMM, GMM, G50, G50A, G50E, G55H, G55I, G55VH, G56I, G60, G60I, G60KW, G60WH, G65, G66, G70, G70A, G71, G80, G84, G85, G86, G90, G103, G104, G105, G106, G107, G108, G110, G114, G115, G116, G117, G120, G120SW, G121, G122, G125, G130, G132, G132 BC, G135V, G140 SW, G151, G152, G152BC, G152I, G160, G167, G170, G175 V, G240, GPrima, G1.190, G1.200, G2.220, G2.230, G3.220, G3.230, G3.250, G4.200, G4.210, G4.220, G5.310, G5.320, G6.200, G6.210, G7.200, G7.210, G7.220, G7.240, G8.260, G8.270, G9.320, G9.330, G10.330, G10.380, GL7.4, GL8, GX8, GM7.4

REF.182A

CATCHER TRAY FLAP BRACKET RIGHT FOR TESXGRE

Comp. 325004

PMME, PMM, GMM, G50, G50A, G50E, G55H, G55I, G55VH, G56I, G60, G60I, G60KW, G60WH, G65, G66, G70, G70A, G71, G80, G84, G85, G86, G90, G103, G104, G105, G106, G107, G108, G110, G114, G115, G116, G117, G120, G120SW, G121, G122, G125, G130, G132, G132 BC, G135V, G140 SW, G151, G152, G152BC, G152I, G160, G167, G170, G175 V, G240, GPrima, G1.190, G1.200, G2.220, G2.230, G3.220, G3.230, G3.250, G4.200, G4.210, G4.220, G5.310, G5.320, G6.200, G6.210,

REF.182B

CATCHER TRAY FLAP BRACKET LEFT FOR TESXGRE

Comp. 325005

PMME, PMM, GMM, G50, G50A, G50E, G55H, G55I, G55VH, G56I, G60, G60I, G60KW, G60WH, G65, G66, G70, G70A, G71, G80, G84, G85, G86, G90, G103, G104, G105, G106, G107, G108, G110, G114, G115, G116, G117, G120, G120SW, G121, G122, G125, G130, G132, G132 BC, G135V, G140 SW, G151, G152, G152BC, G152I, G160, G167, G170, G175 V, G240, GPrima, G1.190, G1.200, G2.220, G2.230, G3.220, G3.230, G3.250, G4.200, G4.210, G4.220, G5.310, G5.320, G6.200, G6.210,

REF.184A

FRONT CATCHER TRAY FLAP BRACKET R.H.

Comp. 345007

PMME, PMM, GMM, G50, G50A, G50E, G55H, G55I, G55VH, G56I, G60, G60I, G60KW, G60WH, G65, G66, G70, G70A, G71, G80, G84, G85, G86, G90, G103, G104, G105, G106, G107, G108, G110, G114, G115, G116, G117, G120, G120SW, G121, G122, G125, G130, G132, G132 BC, G135V, G140 SW, G151, G152, G152BC, G152I, G160, G167, G170, G175 V, G240, GPrima, G1.190, G1.200, G2.220, G2.230, G3.220, G3.230, G3.250, G4.200, G4.210, G4.220, G5.310, G5.320, G6.200, G6.210, G7.200, G7.210, G7.220, G7.240, G8.260, G8.270, G9.320, G9.330, G10.330, G10.380, GL7.4, GL8, GX8, GM7.4

REF.184B

FRONT CATCHER TRAY FLAP BRACKET L.H.

Comp. 345008

PMME, PMM, GMM, G50, G50A, G50E, G55H, G55I, G55VH, G56I, G60, G60I, G60KW, G60WH, G65, G66, G70, G70A, G71, G80, G84, G85, G86, G90, G103, G104, G105, G106, G107, G108, G110, G114, G115, G116, G117, G120, G120SW, G121, G122, G125, G130, G132, G132 BC, G135V, G140 SW, G151, G152, G152BC, G152I, G160, G167, G170, G175 V, G240, GPrima, G1.190, G1.200, G2.220, G2.230, G3.220, G3.230, G3.250, G4.200, G4.210, G4.220, G5.310, G5.320, G6.200, G6.210, G7.200, G7.210, G7.220, G7.240, G8.260, G8.270, G9.320, G9.330, G10.330, G10.380, GL7.4, GL8, GX8, GM7.4

REF.184C

LOWER FRONT PLATE (STAINLESS)

Comp. 345009

PMME, PMM, GMM, G50, G50A, G50E, G55H, G55I, G55VH, G56I, G60, G60I, G60KW, G60WH, G65, G66, G70, G70A, G71, G80, G84, G85, G86, G90, G103, G104, G105, G106, G107, G108, G110, G114, G115, G116, G117, G120, G120SW, G121, G122, G125, G130, G132, G132 BC, G135V, G140 SW, G151, G152, G152BC, G152I, G160, G167, G170, G175 V, G240, GPrima, G1.190, G1.200, G2.220, G2.230, G3.220, G3.230, G3.250, G4.200, G4.210, G4.220, G5.310, G5.320, G6.200, G6.210, G7.200, G7.210, G7.220, G7.240, G8.260, G8.270, G9.320, G9.330, G10.330, G10.380, GL7.4, GL8, GX8, GM7.4

REF.153J

3 CANVAS FABRIC (4.2MM) 55CMX 1M..

Comp.

PMME, PMM, GMM, G50, G50A, G50E, G55H, G55I, G55VH, G56I, G60, G60I, G60KW, G60WH, G65, G66, G70, G70A, G71, G80, G84, G85, G86, G90, G103, G104, G105, G106, G107, G108, G110, G114, G115, G116, G117, G120, G120SW, G121, G122, G125, G130, G132, G132 BC, G135V, G140 SW, G151, G152, G152BC, G152I, G160, G167, G170, G175 V, G240, GPrima, G1.190, G1.200, G2.220, G2.230, G3.220, G3.230, G3.250, G4.200, G4.210, G4.220, G5.310, G5.320, G6.200, G6.210, G7.200, G7.210, G7.220, G7.240, G8.260, G8.270, G9.320, G9.330, G10.330, G10.380, GL7.4, GL8, GX8, GM7.4

REF.135A

COUPLING RING

Comp. 05043

G103, G104, G105, G106, G107, G108, G10X, G114, G 115, G117, G120SD, G120SW, G121, G122, G125, G130, G132, G133V, G135V, G13X, G140SW, G152, G167, G170, G175V, G6.200, G6.210, G60, G7.220, G7.240, G70, G71, G8.260, G8.270, G84, G86, G9.320, G90

REF.135B

RED COUPLING RING. NEW VERSION

Comp. 05239

G103, G104, G105, G106, G107, G108, G10X, G114, G 115, G117, G120SD, G120SW, G121, G122, G125, G130, G132, G133V, G135V, G13X, G140SW, G152, G167, G170, G175V, G6.200, G6.210, G60, G7.220, G7.240, G70, G71, G8.260, G8.270, G84, G86, G9.320, G90

REF.134B

COUPLING (ENGINE SIDE) + COUPLING (ROTOR SIDE)

Comp. 388603+388602

G103, G104, G105, G106, G107, G108, G10X, G114, G 115, G117, G120SD, G120SW, G121, G122, G125, G130, G132, G133V, G135V, G13X, G140SW, G152, G167, G170, G175V, G6.200, G6.210, G60, G7.220, G7.240, G70, G71, G8.260, G8.270, G84, G86, G9.320, G90

VAT not included

Free EU transport on orders 600€

All trademarks belong to their respective owners and their use is for informational purposes only.

WWW.EDUARDOREPUESTOSAGRICOLAS.COM

Check Ref. Before.

GREGOIRE COMPATIBLE

EDUARDO

REF.117A

REAR PULLEY 185 MM WITH Ø 20 MM SHAFT

Comp. 120403

G 86, G 103, G 104, G 105, G 106, G 107, G 108, G 10X, G 114, G 115, G 117, G 120 SD, G 120SW, G 121, G 122, G 125, G 130, G 132, G 133V, G 135 V, G 13X, G 140SW, G 152, G 167, G 170, G 175V, G 6.200, G 6.210, G 60, G 7.220, G 7.240, G 70, G 71, G 8.260, G 8.270, G 84, G 86, G 9.320, G 90

REF.117B

FRONT PULLEY 145 MM WITH Ø 20 MM SHAFT

Comp. 120404

G 7.240, G 70, G 8.260, G 86, G 103, G 104, G 105, G 106, G 107, G 108, G 10X, G 114, G 115, G 117, G 120 SD, G 120SW, G 121, G 122, G 125, G 130, G 132, G 133V, G 135 V, G 13X, G 140SW, G 152. G 167. G 170.

REF.117D

PULLEY 155 MM, Ø 30mm

Comp. 120663

G 103, G 104, G 105, G 106, G 107, G 108, G 10X, G 114, G 115, G 117, G 120 SD, G 120SW, G 121, G 122, G 125, G 130, G 132, G 133V, G 135 V, G 13X, G 140SW, G 152, G 167, G 170, G 175V, G 6.200. G 6.210. G 60. G 7.220. G 7.240. G 70. G 71. G 8.260. G

REF.117E

0

Comp. 386508

G 103, G 104, G 105, G 106, G 107, G 108, G 10X, G 114, G 115, G 117, G 120 SD, G 120SW, G 121, G 122, G 125, G 130, G 132, G 133V, G 135 V, G 13X, G 140SW, G 152, G 167, G 170, G 175V, G 6.200, G 6.210, G 60, G 7.220, G 7.240, G 70, G 71, G 8.260, G 8.270, G 84, G 86, G 9.320, G 90

REF.117F

PULLEY 145 MM with hollow sensor, Ø 20mm

Comp. 124670

REF.117G

PULLEY 185 MM, Ø 25mm

Comp. 502818

REF.117H

PULLEY 206 MM, Ø 30mm

Comp. 120662

G 103, G 104, G 105, G 106, G 107, G 108, G 10X, G 114, G 115, G 117, G 120 SD, G 120SW, G 121, G 122, G 125, G 130, G 132, G 133V, G 135 V, G 13X, G 140SW, G 152, G 167, G 170, G 175V, G 6.200, G 6.210, G 60, G 7.220, G 7.240, G 70, G 71, G 8.260, G 8.270, G 84, G 86, G 9.320, G 90

REF.117J

0

Comp. 385289

REF.117K

0

Comp. 385414

REF.126A

PULLEY MGT 300 + TAPER LOCK 25

Comp. 280017 (280028+230006)

G 103, G 104, G 105, G 106, G 107, G 108, G 10X, G 114, G 115, G 117, G 120 SD, G 120SW, G 121, G 122, G 125, G 130, G 132, G 133V, G 135 V, G 13X, G 140SW, G 152, G 167, G 170, G 175V, G 6.200, G 6.210, G 60, G 7.220, G 7.240, G 70, G 71, G 8.260, G 8.270, G 84, G 86, G 9.320, G 90

REF.126B

PULLEY MGT 400 +TAPER LOCK 30

Comp. 280018 (280031+230010)

G 103, G 104, G 105, G 106, G 107, G 108, G 10X, G 114, G 115, G 117, G 120 SD, G 120SW, G 121, G 122, G 125, G 130, G 132, G 133V, G 135 V, G 13X, G 140SW, G 152, G 167, G 170, G 175V, G 6.200, G 6.210, G 60, G 7.220, G 7.240, G 70, G 71, G 8.260, G 8.270, G 84, G 86, G 9.320, G 90

★ REF.117L

¡ NUEVO !

PULLEY 106 MM WITH Ø 20 MM

Comp. 121593

GL7, GL8

★ REF.117M

¡ NUEVO !

DETOUR POULIE D106

Comp. 389659

GL7, GL9

★ REF.126C

¡ NUEVO !

PULLEY MGT 350

Comp. 280093

GL7,GL8

★ REF.146A / B / C / D / E

REF.146A EXT20 (055007)

REF.146B EXT25 (055008)

REF.146C EXT30 (055009)

REF.146D INT42 (055018)

REF.146E INT52 (055109)

REF.177A

LIPSEAL FOR BEARING PULLEY Ø 20 MM (25x42x8)

Comp. 185025

G 103, G 104, G 105, G 106, G 107, G 108, G 10X, G 114, G 115, G 117, G 120 SD, G 120SW, G 121, G 122, G 125, G 130, G 132, G 133V, G 135 V, G 13X, G 140SW, G 152, G 167, G 170, G 175V, G 6.200, G 6.210, G 60, G 7.220, G 7.240, G 70, G 71, G 8.260, G 8.270, G 84, G 86, G 9.320, G 90

REF.177E

LIPSEAL FOR BEARING PULLEY Ø 25 MM(28x52x7)

Comp. 185923

REF.177C

LIPSEAL FOR BEARING PULLEY Ø 30 MM (38x55x10)

Comp. 185034

REF.183G

BALL BEARING (ONE ROW) 20X42X12 PULLEYØ20

Comp. 330250,330008

REF.183H

BALL BEARING (ONE ROW) 25X52X15 PULLEY Ø25

Comp. 330251,330053

REF.183I

BALL BEARING (ONE ROW) 30X55X13 PULLEY Ø30

Comp. 330009

REF.168A

PULLEY BEARING HOUSING

Comp. 120402

G 103, G 104, G 105, G 106, G 107, G 108, G 10X, G 114, G 115, G 117, G 120 SD, G 120SW, G 121, G 122, G 125, G 130, G 132, G 133V, G 135 V, G 13X, G 140SW, G 152, G 167, G 170, G 175V, G 6.200, G 6.210, G 60, G 7.220, G 7.240, G 70, G 71, G 8.260, G 8.270, G 84, G 86, G 9.320, G 90

★ REF.168B

LOWER BEARING SUPPORT

Comp. 120459

G 103, G 104, G 105, G 106, G 107, G 108, G 10X, G 114, G 115,

All trademarks belong to their respective owners and their use is for informational purposes only.

Check Ref. Before.

WWW.EDUARDOREPUESTOSAGRICOLAS.COM

VAT not included

Free EU transport on orders 600€

GREGOIRE COMPATIBLE

EDUARDO

REF.147A

RUBBER JOINT 20X75X50

Comp. 386655,025024

REF.147B

RUBBER JOINT 14X30X42

Comp. 025012

REF.147C

RUBBER JOINT 24X48X44

Comp. 025015,025039

REF.147E

RUBBER JOINT 28X48X66

Comp. 025014

REF.147F

RUBBER JOINT ELIPTICAL 16X65X60

Comp. 025124, 025011

REF.147H*

RUBBER JOINT PMM

Comp. 385199, 561269

PMM

REF.147G

CAP T 24X48X44

Comp. 385087

REF.127A

CATCHER TRAY RUBBER JOINT 16X32X76 mm

Comp. 385615

G65, G66, G120SW, G140SW, G167, G240, G9.320, G9.330, G9.330 OLIVE, G10.330

REF.147J*

COJINETE DE GOMA ELÍPTICO16X65,5X60

Comp. 025142, 025122

GL7,GL8

REF.190A

BUSCH 28x38x66

Comp. 385997

G 103, G 104, G 105, G 106, G 107, G 108, G 10X, G 114, G 115, G 117, G 120 SD, G 120SW, G 121, G 122, G 125, G 130, G 132, G 133V, G 135 V, G 13X, G 140SW, G 152, G 167, G 170, G 175V, G 6.200, G 6.210, G 60, G 7.220, G 7.240, G 70, G 71, G 8.260, G 8.270, G 84, G 86, G 9.320, G 90

REF.179A

BEARING BUSH FOR HARVESTING HEAD Ø 38 MM

Comp. 265265

G 103, G 104, G 105, G 106, G 107, G 108, G 10X, G 114, G 115, G 117, G 120 SD, G 120SW, G 121, G 122, G 125, G 130, G 132, G 133V, G 135 V, G 13X, G 140SW, G 152, G 167, G 170, G 175V, G 6.200, G 6.210, G 60, G 7.220, G 7.240, G 70, G 71, G 8.260, G 8.270, G 84, G 86, G 9.320, G 90

REF.181A

COMPRESSION SPRING FOR CONVEYOR BELT PULLEYS

Comp. 325001

G 103, G 104, G 105, G 106, G 107, G 108, G 10X, G 114, G 115, G 117, G 120 SD, G 120SW, G 121, G 122, G 125, G 130, G 132, G 133V, G 135 V, G 13X, G 140SW, G 152, G 167, G 170, G 175V, G 6.200, G 6.210, G 60, G 7.220, G 7.240, G 70, G 71, G 8.260, G 8.270, G 84, G 86, G 9.320, G 90

REF.181B*

COMPRESSION SPRING FOR CLEANER BELTS 85mm

Comp. 325003

G 103, G 104, G 105, G 106, G 107, G 108, G 10X, G 114, G 115, G 117, G 120 SD, G 120SW, G 121, G 122, G 125, G 130, G 132, G 133V, G 135 V, G 13X, G 140SW, G 152, G 167, G 170, G 175V, G 6.200, G 6.210, G 60, G 7.220, G 7.240, G 70, G 71, G 8.260, G 8.270, G 84, G 86, G 9.320, G 90

REF.152C

BEARING HOUSING ST 20

Comp. 240023, 385098

G 103, G 104, G 105, G 106, G 107, G 108, G 10X, G 114, G 115, G 117, G 120 SD, G 120SW, G 121, G 122, G 125, G 130, G 132, G 133V, G 135 V, G 13X, G 140SW, G 152, G 167, G 170, G 175V, G 6.200, G 6.210, G 60, G 7.220, G 7.240, G 70, G 71, G 8.260, G 8.270, G 84, G 86, G 9.320, G 90

REF.152B

BEARING HOUSING ST 25

Comp. 385347

G 6.210

REF.152M

BEARING HOUSING ST 30

Comp. 240040

REF.152D

BEARING HOUSING NP25

Comp. 240008

G 103, G 104, G 105, G 106, G 107, G 108, G 10X, G 114, G 115, G 117, G 120 SD, G 120SW, G 121, G 122, G 125, G 130, G 132, G 133V, G 135 V, G 13X, G 140SW, G 152, G 167, G 170, G 175V, G 6.200, G 6.210, G 60, G 7.220, G 7.240, G 70, G 71, G 8.260, G 8.270, G 84, G 86, G 9.320, G 90

REF.152J

BEARING HOUSING NP30

Comp. 240009

REF.152H

BEARING HOUSING NP35

Comp. 240010

G 103, G 104, G 105, G 106, G 107, G 108, G 10X, G 114, G 115, G 117, G 120 SD, G 120SW, G 121, G 122, G 125, G 130, G 132, G 133V, G 135 V, G 13X, G 140SW, G 152, G 167, G 170, G 175V, G 6.200, G 6.210, G 60, G 7.220, G 7.240, G 70, G 71, G 8.260, G 8.270, G 84, G 86, G 9.320, G 90

REF.152F

BEARING HOUSING NP45

Comp. 240038

G 103, G 104, G 105, G 106, G 107, G 108, G 10X, G 114, G 115, G 117, G 120 SD, G 120SW, G 121, G 122, G 125, G 130, G 132, G 133V, G 135 V, G 13X, G 140SW, G 152, G 167, G 170, G 175V, G 6.200, G 6.210, G 60, G 7.220, G 7.240, G 70, G 71, G 8.260, G 8.270, G 84, G 86, G 9.320, G 90

GREGOIRE COMPATIBLE

EDUARDO

REF.152G

BEARING HOUSING SFT 20

Comp. 240018

G 103, G 104, G 105, G 106, G 107, G 108, G 10X, G 114, G 115, G 117, G 120 SD, G 120SW, G 121, G 122, G 125, G 130, G 132, G 133V, G 135 V, G 13X, G 140SW, G 152, G 167, G 170, G 175V, G 6.200, G 6.210, G 60, G 7.220, G 7.240, G 70, G 71, G 8.260, G 8.270, G 84, G 86, G 9.320, G 90

REF.152A

BEARING HOUSING SFT 25

Comp. 240019

G 6.210, G 7.240, G 8.260

REF.152K

BEARING HOUSING SFT 30

Comp. 240020

G 7.240

REF.152L

BEARING HOUSING SFT 35

Comp. -

REF.152N

BEARING HOUSING SF 25

Comp. 240014

REF.152P

BEARING HOUSING SF 30

Comp. 240015

G 8.260

REF.152Q

BEARING HOUSING SF 35

Comp. 240016

G 86

REF.152E

BEARING HOUSING SF 45

Comp. 240017

G 103, G 104, G 105, G 106, G 107, G 108, G 10X, G 114, G 115, G 117, G 120 SD, G 120SW, G 121, G 122, G 125, G 130, G 132, G 133V, G 135 V, G 13X, G 140SW, G 152, G 167, G 170, G 175V, G 6.200, G 6.210, G 60, G 7.220, G 7.240, G 70, G 71, G 8.260, G 8.270, G 84, G 86, G 9.320, G 90

REF.169F*

RIGHT PITCH ADJUSTING HOUSING

Comp. 120523

G 103, G 104, G 105, G 106, G 107, G 108, G 10X, G 114, G 115, G 117, G 120 SD, G 120SW, G 121, G 122, G 125, G 130, G 132, G 133V, G 135 V, G 13X, G 140SW, G 152, G 167, G 170, G 175V, G 6.200, G 6.210, G 60, G 7.220,

REF.169G*

LEFT PITCH ADJUSTING HOUSING

Comp. 120524

G 103, G 104, G 105, G 106, G 107, G 108, G 10X, G 114, G 115, G 117, G 120 SD, G 120SW, G 121, G 122, G 125, G 130, G 132, G 133V, G 135 V, G 13X, G 140SW, G 152, G 167, G 170, G 175V, G 6.200, G 6.210, G 60, G 7.220, G 7.240, G 70, G 71, G 8.260, G 8.270, G 84, G 86, G 9.320, G 90

REF.189C*

CONNECTING TIE-BAR 598mm

Comp. 385229

G152

REF.189D*

CONNECTING TIE-BAR 490mm

Comp. 385754

G122, GL7

REF.199A

ROD HOLDER DRIVING LINK

Comp. 120676

G 60, G 152

REF.199C*

ROD HOLDER DRIVING LINK L140MM

Comp. 123939

G 132

REF.186A

M28

PICKING-HEAD NUT 28X150 L.H.

Comp. 385017

G 103, G 104, G 105, G 106, G 107, G 108, G 10X, G 114, G 115, G 117, G 120 SD, G 120SW, G 121, G 122, G 125, G 130, G 132, G 133V, G 135 V, G 13X, G 140SW, G 152, G 167, G 170, G 175V, G 6.200, G 6.210, G 60, G 7.220, G 7.240, G 70, G 71, G 8.260, G 8.270, G 84, G 86, G 9.320, G 90

REF.186B

M28

PICKING-HEAD NUT 28X150 R.H.

Comp. 385018

G 103, G 104, G 105, G 106, G 107, G 108, G 10X, G 114, G 115, G 117, G 120 SD, G 120SW, G 121, G 122, G 125, G 130, G 132, G 133V, G 135 V, G 13X, G 140SW, G 152, G 167, G 170, G 175V, G 6.200, G 6.210, G 60, G 7.220, G 7.240, G 70, G 71, G 8.260, G 8.270, G 84, G 86, G 9.320, G 90

REF.157D*

ADJUSTING NUT L=140MM

Comp. 385019

6152, G55

REF.172A

M24

TIE-ROD HOLDERS PIN FOR M24X200

Comp. 124048

G 103, G 104, G 105, G 106, G 107, G 108, G 10X, G 114, G 115, G 117, G 120 SD, G 120SW, G 121, G 122, G 125, G 130, G 132, G 133V, G 135 V, G 13X, G 140SW, G 152, G 167, G 170, G 175V, G 6.200, G 6.210, G 60, G 7.220, G 7.240, G 70, G 71, G 8.260, G 8.270, G 84, G 86, G 9.320, G 90

REF.172C

M24

TIE-ROD HOLDERS PIN D28 L168 M24X200

Comp. 501684

Check Ref. Before.

All trademarks belong to their respective owners and their use is for informational purposes only.

WWW.EDUARDOREPUESTOSAGRICOLAS.COM

VAT not included

Free EU transport on orders 600€

GREGOIRE COMPATIBLE

EDUARDO

REF.172L

M24

SCREW BEAMED SPECIAL M24X175

Comp. 501684

REF.172M

M24

NUT BEAMED SPECIAL M24

Comp. -

REF.172N

M24

SCREW M24X160 ZN

Comp. 65235

REF.172H

M24

NUT WITH BRAKE M24 ZN

Comp. 65973

REF.172G

M24

WHASER M24 ZN

Comp. 65071

REF.172B

M20

CONNECTING ROD BOLT M20X151

Comp. 386118

REF.172J

M20

JOINER TIE-ROD NUT M20X150

Comp. 386120

REF.172K

M20

H NUT M20X150 - ZINC

Comp. 65786

REF.172D

M16

SCREW BEAMED M16X130

Comp. 385353

G 103, G 104, G 105, G 106, G 107, G 108, G 10X, G 114, G 115, G 117, G 120 SD, G 120SW, G 121, G 122, G 125, G 130, G 132, G 133V, G 135 V, G 13X, G 140SW, G 152, G 167, G 170, G 175V, G 6.200, G 6.210, G 60, G 7.220, G 7.240, G 70, G 71, G 8.260, G 8.270, G 84, G 86, G 9.320, G 90

REF.172E

M16

NUT BEAMED SPECIAL M16

Comp. 385355

G 103, G 104, G 105, G 106, G 107, G 108, G 10X, G 114, G 115, G 117, G 120 SD, G 120SW, G 121, G 122, G 125, G 130, G 132, G 133V, G 135 V, G 13X, G 140SW, G 152, G 167, G 170, G 175V, G 6.200, G 6.210, G 60, G 7.220, G 7.240, G 70, G 71, G 8.260, G 8.270, G 84, G 86, G 9.320, G 90

REF.172F

M16

NUTS WITH AUTO BRAKE M16 ZN

Comp. 65016

G 65, G 66, G 120 SW, G 140 SW, G 167, G 240, G9.320, G9.330, G9.330 Olive, G10.330,

REF.160B

M14

JOINER TIE-ROD NUT M14

Comp. 385189

G 103, G 104, G 105, G 106, G 107, G 108, G 10X, G 114, G 115, G 117, G 120 SD, G 120SW, G 121, G 122, G 125, G 130, G 132, G 133V, G 135 V, G 13X, G 140SW, G 152, G 167, G 170, G 175V, G 6.200, G 6.210, G 60, G 7.220, G 7.240, G 70, G 71, G 8.260, G 8.270, G 84, G 86, G 9.320, G 90

REF.160F

M14

LOCK NUT M14 - ZINC

Comp. 65015

REF.161B

M14

CONNECTING ROD BOLT M14X110

Comp. 386478

REF.169E

FAN GRINDER

Comp. 120451

G 103, G 104, G 105, G 106, G 107, G 108, G 10X, G 114, G 115, G 117, G 120 SD, G 120SW, G 121, G 122, G 125, G 130, G 132, G 133V, G 135 V, G 13X, G 140SW, G 152, G 167, G 170, G 175V, G 6.200, G 6.210, G 60, G 7.220, G 7.240, G 70, G 71, G 8.260, G 8.270, G 84, G 86, G 9.320, G 90

REF.193A*

REAR LIGHT HOUSING

Comp. 165312

G103, G104, G105, G106, G107, G108, G10X, G114, G 115, G117, G120SD, G120SW, G121, G122, G125, G130, G132, G133V, G135V, G13X, G140SW, G152, G167, G170, G175V, G6.200, G6.210, G60, G7.220, G7.240, G70, G71, G8.260, G8.270, G84, G86, G9.320, G90

REF.193B

RIGHT / LEFT INTERMITTENT

Comp. 165213, 165214

G103, G104, G105, G106, G107, G108, G10X, G114, G 115, G117, G120SD, G120SW, G121, G122, G125, G130, G132, G133V, G135V, G13X, G140SW, G152, G167, G170, G175V, G6.200, G6.210, G60, G7.220, G7.240, G70, G71, G8.260, G8.270, G84, G86, G9.320, G90

REF.193D

COMPLETE HEADLIGHT

Comp. 165216

G103, G104, G105, G106, G107, G108, G10X, G114, G 115, G117, G120SD, G120SW, G121, G122, G125, G130, G132, G133V, G135V, G13X, G140SW, G152, G167, G170, G175V, G6.200, G6.210, G60, G7.220, G7.240, G70, G71, G8.260, G8.270, G84, G86, G9.320, G90

REF.193E*

GALIBO LIGHT

Comp. 166565

G 86

REF.188X	Z-15 3/4 ø25mm Comp. 385283
REF.188D	Z-17 1/2 ø20mm Comp. 385251
REF.188E	Z-17 1/2 ø25mm Comp. 385078
REF.188P	Z-17 3/4 ø25 TP 1610 Comp.386300
REF.188H	Z-19 3/4 ø25mm Comp. 385217
REF.188B	Z-21 1/2 ø25mm Comp. 385123
REF.188J	Z-21 3/4 ø25 cubo ø70 Comp. 385370
REF.188Y	Z-23 3/4 ø25mm Comp. 386131
REF.188L	Z-25 1/2 ø25 mm Comp. 387703
REF.188F	Z-25 3/4 ø25mm Comp. 385233
REF.188C	Z-30 1/2 ø25mm Comp. 386550
REF.188K	Z-30 3/4 ø25 TP2517 ø45 Comp.250034
REF.188G	Z-35 3/4 ø25mm Comp. 255009
REF.188A	Z-38 1/2 ø25 TP2517 Comp. 385242
REF.188Z	Z-38 3/4 ø25mm Comp. 385076
REF.188I	Z-38 3/4 ø45 TP2517 Comp.250064

REF.129A

¡ NUEVO !

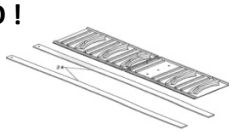

WEAR BAND 4M X 5CM X 9MM

Comp. -

G103, G104, G105, G106, G107, G108, G10X, G114, G 115, G117, G120SD, G120SW, G121, G122, G125, G130, G132, G133V, G135V, G13X, G140SW, G152, G167, G170, G175V, G6.200, G6.210, G60, G7.220, G7.240, G70, G71, G8.260, G8.270, G84, G86, G9.320, G90

REF.232B

FIBER BAR WITH INOX TUBE. BENT, Olive Grove (length 100 cm)

Comp. -

REF.233B

FIBER BAR WITH TUBE INOX.WITHOUT BEND, Olive Grove (length 100 cm)

Comp. 84343361

REF.162B

DOUBLE EXCENTRIC AXLE

Comp. 385248

G 60, G 115, G 122, G 152, G6.210, GL7.4

REF.104A

OLIVES LOWER SHAKER 935mm Ø28

Comp. 265574

9090X, 9090X GE, 9090X GE T3, 9090X GE T4, 9090X GE T5, 9090X H, 9090X H H, 9090X H T4, 9090X O, 9090X O GE, 9090X O GE T3, 9090X O GE T4, 9090X O GE T5, 9090X O H T4, 9090X O T3, 9090X O T4, 9090X O T5, 9090X OP, 9090X OP GE, 9090X T3, 9090X T4, 9090X T5, SB65, VX680, VX7090

REF.190C

SHAFT Ø25mm X544 TRACTION PULLEY

Comp. 385681

REF.190B

SHAFT Ø25mm X495 TRACTION PULLEY

Comp. 385125

Check Ref. Before.

VAT not included
Free EU transport on orders 600€

REF.121A

SCREW FIXING KW CATCHER M8X25 MM

Comp. 60031

G 65, G 66, G 120 SW, G 140 SW, G 167, G 240, G9.320, G9.330, G9.330 Olive, G10.330,

REF.168D

SHAFT OF POULIE DE DETOUR

Comp. 502702

REF.126D

TAPER 2517 (MGT32-25MM)

Comp. 230006

REF.126E

TAPER 2517 (MGT50-30MM)

Comp. 230010

REF.126F

TAPER 2517 DIAM 45

Comp. 230004

REF.171B*

¡ NUEVO !

SHAKER BUSHING CALIPER

Comp. 510906

REF.168E

¡ NUEVO !

M6 LUBRICATOR

Comp. 055046

0,40€/u

REF.163A

BALL BEARING EXCENTRIC AXLE 100x150x24

Comp. 330230

G 60, G 115, G 122, G 152, G6.211

62,00€/u

REF.177D

LIPSEAL FOR BEARING (85X110X18)

Comp. 185045

39,80€/u

REF.125C

FLANGE SCREW M10x30 NUT WHASER

Comp.

GL7.4, GM7.4, GL6.4, GL8, GX8

REF.125D

FLANGE M12x40 SCREW NUT WHASER

Comp.

GX9,GX10

REF.198D

REAR PULLEY GUIDE RIGHT

Comp. 355006

REF.198E

REAR PULLEY GUIDE LEFT

Comp. 355007

REF.570Q

DIAM 25 BALL BEARING 1 NEXT

Comp. -

REF.570A

Ø25 MM BALL BEARING WITH RING FOR CROSS BELT(

Comp. 920019044,84287485

GREGOIRE COMPATIBLE

EDUARDO

REF.191A

SINGLE CHAIN 12.70 1/2 " BELT 1m

Comp. 95070

G103, G104, G105, G106, G107, G108, G10X, G114, G 115, G117, G120SD, G120SW, G121, G122, G125, G130, G132, G133V, G135V, G13X, G140SW, G152, G167, G170, G175V, G6.200, G6.210, G60, G7.220, G7.240, G70, G71, G8.260, G8.270, G84,

REF.191B

SINGLE CHAIN UNION 12.70

Comp. 95071

G103, G104, G105, G106, G107, G108, G10X, G114, G 115, G117, G120SD, G120SW, G121, G122, G125, G130, G132, G133V, G135V, G13X, G140SW, G152, G167, G170, G175V, G6.200, G6.210, G60, G7.220, G7.240, G70, G71, G8.260, G8.270, G84,

REF.191C

HALF LINK SINGLE CHAIN 12.70

Comp. 95072

G103, G104, G105, G106, G107, G108, G10X, G114, G 115, G117, G120SD, G120SW, G121, G122, G125, G130, G132, G133V, G135V, G13X, G140SW, G152, G167, G170, G175V, G6.200, G6.210, G60, G7.220, G7.240, G70, G71, G8.260, G8.270, G84, G86, G9.320, G90

★ REF.176B*

¡ NUEVO !

2-WIRE CAPACITIVE SENSOR

Comp. 166216

REF.191D

REINFORCED CHAIN 19.05 60H 3/4 "SHAKE 1m

Comp. 95056

G103, G104, G105, G106, G107, G108, G10X, G114, G 115, G117, G120SD, G120SW, G121, G122, G125, G130, G132, G133V, G135V, G13X, G140SW, G152, G167, G170, G175V, G6.200, G6.210, G60, G7.220, G7.240, G70, G71, G8.260, G8.270, G84,

REF.191E

SINGLE CHAIN UNION 19.05

Comp. 95057

G103, G104, G105, G106, G107, G108, G10X, G114, G 115, G117, G120SD, G120SW, G121, G122, G125, G130, G132, G133V, G135V, G13X, G140SW, G152, G167, G170, G175V, G6.200, G6.210, G60, G7.220, G7.240, G70, G71, G8.260, G8.270, G84,

REF.191F

HALF LINK SINGLE CHAIN 19.05

Comp. 95058

G103, G104, G105, G106, G107, G108, G10X, G114, G 115, G117, G120SD, G120SW, G121, G122, G125, G130, G132, G133V, G135V, G13X, G140SW, G152, G167, G170, G175V, G6.200, G6.210, G60, G7.220, G7.240, G70, G71, G8.260, G8.270, G84,

REF.176A

INDUCTIVE SENSOR M12 CONNECTOR M12

Comp. 168115

G 103, G 104, G 105, G 106, G 107, G 108, G 10X, G 114, G 115, G 117, G 120 SD, G 120SW, G 121, G 122, G 125, G 130, G 132, G 133V, G 135 V, G 13X, G 140SW, G 152, G 167, G 170, G 175V, G 6.200, G 6.210, G 60, G 7.220, G 7.240, G 70, G 71, G 8.260, G

REF.178B

FILTRE FUEL

Comp. 216252

G7.230

REF.178C

FILTRE FUEL

Comp. 170201

G8.260, G7.240, G9.320

REF.178D

PRE - FILTRE FUEL

Comp. 216251

G7.230

REF.178E

PRE - FILTRE FUEL

Comp. 216177

G8.260, G7.240

REF.178F

FILTRE OIL

Comp. 216191

G7.230

REF.178G

FILTRE OIL

Comp. 170199

G8.260, G7.240, G9.320

REF.178H

FILTRE HYDRAULIC

Comp. 170203

G7.230, G8.260, 7.240, G9.320

REF.178I

FILTRE HYDRAULIC

Comp. 170055

G8.260, G7.240, G9.320

REF.178J

EXTERIOR AIR FILTER

Comp. 215466, 170120

G7.230, G8.260, G8.320

REF.178K

INTERIOR AIR FILTER

Comp. 215467, 170121

G7.230, G8.260

REF.178L

EXTERIOR AIR FILTER

Comp. 170141

G7.230, G8.260, G8.321

REF.178M

INTERIOR AIR FILTER

Comp. 170140

G7.240, G9.320

All trademarks belong to their respective owners and their use is for informational purposes only.

VAT not included

Check Ref. Before.

WWW.EDUARDOREPUESTOSAGRICOLAS.COM

Free EU transport on orders 600€

PELLENC COMPATIBLE

EDUARDO

REF.307B

SHAKING ROD STD

Comp. 38602

SERIE 3000, 4000

REF.309B

SHAKING ARM GR / LM 05

Comp. 38603

SERIE 3000, 4000

REF.329B

SHAKING ROD OPTIMUM SELF-PRESSED 1162MM

Comp. 114026

OPTIMUM

REF.308B

SHAKER 8000 1030MM

Comp. 71772

8015, 8030, 8035, 8050, 8070, 8090

REF.367F

SHAKING ROD STD

Comp. 72836

SERIE 3000, 4000

REF.367G

SHAKING ROD GR

Comp. 38603

SERIE 3000, 4000

REF.367J

SHAKING ROD OPTIMUM

Comp. 125000

OPTIMUM, GRAPE´S LINE

REF.367K

NEW !

SHAKING ROD OPTIMUM THICK CEPS

Comp. 225000

SERIE 8000, OPTIMUM, GRAPE´S LINE

REF.331C

SHAKING ROD SUPERIOR GUIDE

Comp. 114214

OPTIMUM

REF.331A

SHAKING ROD SUPERIOR GUIDE

Comp. 80847

SERIE 3000

REF.331B

NEW !

SHAKING ROD SUPERIOR GUIDE

Comp. 111346

SERIE 8000, GRAPE´S LINE, OPTIMUM L4, L6

REF.383A

HIGH RESISTANCE CURVED BRUSH

Comp. -

SERIE 3000, 4000, OPTIMUM

REF.301D

RIGHTCATCHER TRAY, PRE-2006 MODEL

Comp. 18313

SERIE 3000, 4000

REF.302D

LEFT CATCHER TRAY, PRE-2006 MODEL

Comp. 18311

RIGHTCATCHER TRAY, PRE-2006 MODEL

REF.303D

RIGHTCATCHER TRAY POST-206

Comp. 64866

SERIE 3000, 4000, 8000

REF.304D

LEFT CATCHER TRAY POST-206

Comp. 64868

SERIE 3000, 4000, 8001

REF.305D

LEFT ELBOW

Comp. 64865

SERIE 3000, 4000, 8002

REF.306D

RIGHT ELBOW

Comp. 64864

SERIE 3000, 4000, 8003

REF.315D

LEFTELBOW OPTIMUM

111850

SERIE 8000, OPTIMUM, GRAPE´S LINE

REF.316D

RIGHT ELBOW OPTIMUM

Comp. 111851

SERIE 8000, OPTIMUM, GRAPE´S LINE

Check Ref. Before.

All trademarks belong to their respective owners and their use is for informational purposes only.

WWW.EDUARDOREPUESTOSAGRICOLAS.COM

VAT not included

Free EU transport on orders 600€

PELLENC COMPATIBLE

EDUARDO

REF.317D

LEFT CATCHER TRAY

Comp. 125435

SERIE 8000, OPTIMUM

REF.318D

RIGHT CATCHER TRAY

Comp. 125437

SERIE 8000, OPTIMUM

REF.332A

DISTANCING PLATE ESCAMA OPTIMUM

Comp. 120856

SERIE 8000, OPTIMUM, GRAPE´S LINE

REF.333A*

SCREWS - INSERT - WASHER ESCAMA OPTIMUM

Comp. 133642,02913,133636

SERIE 8000, OPTIMUM, GRAPE´S LINE

REF.336A

SHEET UNION ELBOW OPTIMUM TO CHASSIS

Comp. 125455

SERIE 8000, OPTIMUM, GRAPE´S LINE

REF.312B

NEW !

COMPLETE KIT FOR SHAKING ROD THICK CEPS (12X40X40)

Comp. 162500

OPTIMUM, GRAPE´S LINE

REF.379F

ELBOW FLAKE INJECTED WHITE

Comp. -

SERIE 8000, OPTIMUM, GRAPE´S LINE

REF.379D

DOUBLE THREADED INSERT FOR INJECTED FLAKES

Comp. 134795

SERIE 8000, OPTIMUM, GRAPE´S LINE

REF.350A

HORIZONTAL SKATE

Comp. 107148

SERIE 8000, OPTIMUM, GRAPE´S LINE

REF.349A

RIGHT DOWNSTREAM SKATE TDR2-4-5

Comp. 107147

SERIE 8000, OPTIMUM, GRAPE´S LINE

REF.349B

LEFT DOWNSTREAM SKATE TDR2-4-5

Comp. 108604

SERIE 8000, OPTIMUM, GRAPE´S LINE

REF.350B

KIT SKATE

Comp. 39F1086

2u REF.349A + 2u REF349B + 4u REF350A + 12 +12

REF.379E

SCREW TH WITHOUT RIB M8-30 CL8,8 GEOME

Comp. 139094

SERIE 8000, OPTIMUM, GRAPE´S LINE

REF.379C

PLUMBING BLANCHE ESCAPE

Comp. 137242

SERIE 8000, OPTIMUM, GRAPE´S LINE

REF.310A

SHAKING ROD COUPLING

Comp. 37488

SERIE 3000, 4000, OPTIMUM

REF.311A

STAINLESS STEEL SHAKING ROD COUPLING PLATE

Comp. 49603

SERIE 3000, 4000, 8000, OPTIMUM, GRAPE´S LINE

REF.312A

COMPLETE KIT FOR SHAKING ROD (14X30X42)

Comp. 67007

SERIE 3000, 4000, 8000, OPTIMUM, GRAPE´S LINE

REF.313A

KIT FOR SHAKING ROD COMPLET

Comp. 38604

SERIE 3000, 4000, OPTIMUM,

REF.314A

KIT 2 SCREWS 8.8 M8X40 + 2 NUTS

Comp. -

SERIE 3000, 4000, OPTIMUM

REF.346A*

SUPPORT FOR CATCHER TRAY, PRE-2006 MODEL

Comp. 32517

SERIE 3000, 4000

VAT not included

Free EU transport on orders 600€

All trademarks belong to their respective owners and their use is for informational purposes only.

WWW.EDUARDOREPUESTOSAGRICOLAS.COM

Check Ref. Before.

PELLENC COMPATIBLE

EDUARDO

REF.344A

NUT CLOSED M8 (shaking rod coupling)

Comp. 50346

SERIE 3000, 4000, 8000, OPTIMUM, GRAPE´S LINE

REF.344B

NUT CLOSED M12 (Silentblock)

Comp. 34888

SERIE 3000, 4000, 8000, OPTIMUM, GRAPE´S LINE

REF.334A

RUBBER JOINT FOR SHAKING ROD (14X30X42)

Comp. 04779

SERIE 3000, 4000, 8000, OPTIMUM, GRAPE´S LINE

REF.345C

NEW !

KIT FOR INJECTABLE SHAKERS 2 SCREWS M8X60 8.8 + 2 NUTS M8 + 2 WASHERS

Comp. 13006,50346,08112

SERIE 3000, 4000, 8000, OPTIMUM, GRAPE´S LINE

REF.342C

WITHOUT SHIPMENT

BELT 250 (without staple) 1m

Comp. -

SERIE 3000, 4000, 8000, OPTIMUM

REF.342H

WITHOUT SHIPMENT

BELT 250 (without staple) 11m

Comp. -

SERIE 3000, 4000, 8000, OPTIMUM

REF.342D

WITHOUT SHIPMENT

BELT 310 (without staple) 1m

Comp. -

SERIE 3000, 4000, 8000, OPTIMUM

REF.342I

WITHOUT SHIPMENT

BELT 310 (without staple) 11m

Comp. -

SERIE 3000, 4000, 8000, OPTIMUM

REF.340F

STAPLE stainless steel for 250mm nails Cu

Comp. -

SERIE 3000, 4000, OPTIMUM

REF.340G

STAPLE stainless steel for 310mm nails Cu

Comp. -

SERIE 3000, 4000, OPTIMUM

REF.145C

BELT GUIDE INOX 250 3 mm diameter

Comp. -

SERIE 3000, 4000, 8000, OPTIMUM

REF.145D

BELT GUIDE INOX 310 3 mm diameter

Comp. -

SERIE 3000, 4000, 8000, OPTIMUM

REF.339L

STAPLE inox steel with copper nails (250mm)

Comp. -

SERIE 3000, 4000, OPTIMUM

REF.339M

STAPLE inox steel with copper nails (320mm)

Comp. -

SERIE 3000, 4000, OPTIMUM

NEW !

REF.390A

FAN OUTLET

Comp. 43941

SERIE 3000, 4000, 8000, OPTIMUM, GRAPE´S LINE

NEW !

REF.390D

2-LAYER GREY CANVAS M2

Comp. -

SERIE 3000, 4000, 8000, OPTIMUM, GRAPE´S LINE

REF.339P

STAPLE RS125 inox steel (250mm)

Comp. -

SERIE 3000, 4000, OPTIMUM

REF.339Q

STAPLE RS125 inox steel (320mm)

Comp. -

SERIE 3000, 4000, OPTIMUM

REF.351C

COPPER NAILS WITH TIP (2,1x17 mm)

Comp. -

SERIE 3000, 4000, 8000, OPTIMUM, GRAPE´S LINE

REF.343A

PULLEY SCRAPER

Comp. 11290

SERIE 3000, 4000, 8000, OPTIMUM

Check Ref. Before.

All trademarks belong to their respective owners and their use is for informational purposes only.

WWW.EDUARDOREPUESTOSAGRICOLAS.COM

VAT not included

Free EU transport on orders 600€

PELLENC COMPATIBLE

EDUARDO

REF.319A

LOWER ROLLER SMOOTH 250mm

Comp. 49620

SERIE 3000, 4000, OPTIMUM

REF.320A

ABOMBED MOTOR ROLLER 250mm

Comp. 84573

SERIE 3000, 4000, OPTIMUM

REF.321A

LOWER ROLLER SMOOTH 310mm

Comp. 49616

SERIE 3000, 4000, OPTIMUM

REF.322A

ABOMBED MOTOR ROLLER. 310mm

Comp. 84572

SERIE 3000, 4000, OPTIMUM

REF.888A

CONVEYOR ROLLER BEARING (LONG GRR25)

Comp. 37508

SERIE 3000, 4000, 8000, OPTIMUM

REF.889A

RETENTION CONVEYOR ROLLER 41,6-25,5-0,5

Comp. 79417, 01161

SERIE 3000, 4000, 8000, OPTIMUM

REF.341A

STAINLESS STEEL BUCKET FOR 250 MM PELLENC BELT

Comp. -

SERIE 3000, 4000, OPTIMUM

REF.341B

STAINLESS STEEL BUCKET FOR 310 MM PELLENC BELT

Comp. -

SERIE 3000, 4000, 8000

REF.378A

FRONT SHAKING ROD SUPPORT

Comp. 16063

SERIE 3000, 4000, 8000, OPTIMUM

REF.378B

READ SHAKING ROD SUPPORT 2000

Comp. 16064

SERIE 3000, 4000, 8000, OPTIMUM

REF.378C

FASTENING FLANGE SHAKING ROD SUPPORT

Comp. 16064

SERIE 3000, 4000, 8000, OPTIMUM

REF.378E

FLANGE-SUPPORT SCREW M12 CL10

Comp. 46295

SERIE 3000, 4000, 8000, OPTIMUM

REF.335A

PLASTIC CONVEYOR ROLLER, COMPLET 76MM

Comp. 46291

SERIE 3000, 4000, OPTIMUM

REF.335B

PLASTIC CONVEYOR ROLLER, COMPLETE DIAM 88mm

Comp. 64816

SERIE 3000, 4000, OPTIMUM

REF.335C

GUIDED ROLLER BELT WITHOUT BEARINGS AND WITHOUT SHAFT Ø76

Comp. 46290

SERIE 3000, 4000, OPTIMUM

REF.335D

CONVEYOR ROLLER Ø69 / 88

Comp. 62838

SERIE 3000, 4000, OPTIMUM

REF.355A

TAPE GUIDED ROLLER SHAFT

Comp. 42005

SERIE 3000, 4000, OPTIMUM

REF.353A

NYLON BEARING Ø30-31

Comp. 37603, 66137

SERIE 3000, 4000, OPTIMUM

REF.354A

LEFT DEFLECTOR. TAPE ROLLER

Comp. 11237

SERIE 3000, 4000, OPTIMUM

REF.354B

RIGHT DEFLECTOR TAPE GUIDED ROLLER

Comp. 11236

SERIE 3000, 4000, OPTIMUM

VAT not included

Free EU transport on orders 600€

All trademarks belong to their respective owners and their use is for informational purposes only.

Check Ref. Before.

PELLENC COMPATIBLE

EDUARDO

REF.358A*

CUP 130/30 * 2 SMOOTH ROLLER

Comp. 11208

SERIE 3000, 4000, 8000, OPTIMUM

REF.359A*

MAIN BELT PULLEY 2005

Comp. 49615, 45813

SERIE 3000, 4000, OPTIMUM

REF.391E

NEW !

WIRE

Comp. 12803

SERIE 3000, 4000, 8000, OPTIMUM

REF.391C

NEW !

DRAIN PLUG

Comp. 11351

SERIE 3000, 4000, 8000, OPTIMUM, GRAPE´S LINE

REF.396A

LEFT WHITE SCALE

REF.396B

RIGHT WHITE SCALE

REF.364A

SUPPORT SUP. STD REAR AXLE AND GR UPPER

Comp. 01106

SERIE 3000, 4000, OPTIMUM

REF.365A

SUPPORT INF. AND SUP. FRONT AXLE STD

Comp. 01099

SERIE 3000, 4000, OPTIMUM

REF.365B*

LOWER BEARING HOUSING REAR COLUMNS

Comp. 12544

SERIE 3000, 4000, 8000, OPTIMUM, GRAPE´S LINE

REF.374A

SILENTBLOCK D=100 H=30 60SH (EXCENTRIC MAV)

Comp. 16015

SERIE 3000, 4000, 8000, OPTIMUM, GRAPE´S LINE

REF.374B*

RUBBER JOINT 70SH

Comp. 69847

8070, 8090, SERIE 4000

REF.374C*

HEXAGONAL RUBBER JOINT H28 M8x20 35SHA

Comp. 80486

SERIE 3000, 4000, 8000, OPTIMUM

REF.330A

FRONT FLAP FOR STD HARVERSTING HEAD

Comp. 31961

SERIE 3000, 4000, 8000

REF.330B

PREVIOUS MUD OPTIMUM

Comp. 107463 / 107464

8015,8030, 8035, OPTIMUM, GRAPE´S LINE

REF.888B

SUPPORT BEARING INF. AND SUP. FRONT AXLE STD Ø35

Comp. 03489

SERIE 3000, 4000, OPTIMUM

REF.346D

SILENTBLOCK LAST SCALE 05

Comp. 37304

SERIE 3000, 4000, OPTIMUM

REF.330D

NEW !

FRONT FLAP FOR GR HARVERSTING HEAD

Comp. 32976

GR, SERIE 4000

REF.330E

NEW !

PREVIOUS MUD NEW

Comp. 142783 / 142784

9056, OPTIMUM, GRAPES LINES

REF.330C

PREVIOUS MUD 9056

Comp. 35186

9056, OPTIMUM, GRAPES LINES

REF.330F

NEW !

PREVIUS MUD 8090,8070,8050

Comp. 70691 / 70692

8090,8070,8050

PELLENC COMPATIBLE

EDUARDO

REF.351A

SHEET UNION ELBOW OPTIMUM TO CHASSIS

Comp. 111865

SERIE 4000, 8000, OPTIMUM

REF.351B

LEFT BUTTON UNION ELBOW OPTIMUM TO CHASSIS

Comp. 111866

SERIE 4000, 8000, OPTIMUM

NEW !

REF.354C

HORIZONTAL SKATE

Comp. 105380

SERIE 8000, OPTIMUM, GRAPE´S LINE

NEW !

REF.392E*

CONVEYOR PULLEY SHAFT

Comp. 11278

SERIE 3000, 4000, 8000, OPTIMUM

REF.345B

CLIP TYPE CAPTIVE NUT M8x5

Comp. 65078

SERIE 3000, 4000, 8000, OPTIMUM, GRAPES`LINE

NEW !

REF.391F

WORM SCREW BUSHING

Comp. 12803

SERIE 3000, 4000, 8000, OPTIMUM, GRAPES`LINE

NEW !

REF.371D

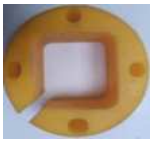

BEARING SLEEVE

Comp. 63729

SERIE 3000, 4000, 8000, OPTIMUM

NEW !

REF.371B*

RODAMIENTO COMPLETO INF. ÁRBOL SAC. 06

Comp. 50179

SERIE 3000, 4000, 8000, OPTIMUM

NEW !

REF.358B*

STAINLESS STEEL PLATE FOR LUBRICATOR

Comp. 06758

SERIE 3000, 4000, 8000, OPTIMUM

NEW !

REF.358C*

STAINLESS STEEL PLATE WITHOUT LUBRICATOR

Comp. 24849

SERIE 3000, 4000, 8000, OPTIMUM

NEW !

REF.397B*

POTENCIOMETRO CABLE 5V SMART 2012

Comp. 102728

SERIE 3000, 4000, 8000, OPTIMUM

NEW !

REF.397A*

SMART TEST BOX

Comp. 00086

SERIE 3000, 4000, 8000, OPTIMUM, GRAPES`LINE

NEW !

REF.334B

SILENT-BLOC 50X50 SINFIN

Comp. 108698

SERIE 3000, 4000, 8000, OPTIMUM, GRAPE´S LINE

NEW !

REF.391D*

STAINLESS STEEL BAND MOTOR PINION ASSEMBLY

Comp. 104530

SERIE 8000, OPTIMUM, GRAPE´S LINE

NEW !

REF.570Q

DIAM 25 BALL BEARING 1 NEXT

Comp. -

NEW !

REF.391B*

CONVEYOR PINION ROLLER

Comp. 113060

SERIE 8000, OPTIMUM, GRAPE´S LINE

NEW !

REF.390B

SELF-PROPELLED FRONT TARPAULIN

Comp. 44056

SERIE 3000, 4000, 8000, OPTIMUM, GRAPE´S LINE

NEW !

REF.398A

WEDGE SCALES

Comp. 72995

SERIE 3000, 4000, 8000, OPTIMUM, GRAPE´S LINE

NEW !

REF.389A

COLUMN ADAPTER WEDGE DIAM 35X50

Comp. 138676

SERIE 8000, OPTIMUM, GRAPE´S LINE

NEW !

REF.389B

MAV TRANSPORT UPPER SKATE

Comp. 18821

SERIE 8000, OPTIMUM, GRAPE´S LINE

Check Ref. Before.

All trademarks belong to their respective owners and their use is for informational purposes only.

WWW.EDUARDOREPUESTOSAGRICOLAS.COM

VAT not included

Free EU transport on orders 600€

PELLENC COMPATIBLE

EDUARDO

GRAPE´S LINE, STD

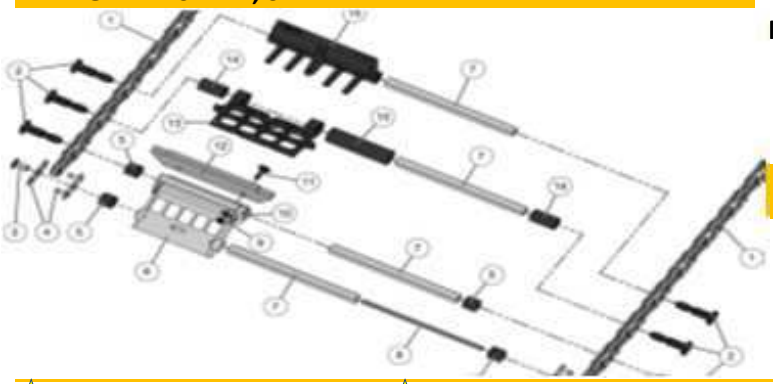

★ NEW ! **REF.384A**

N°1 CHAIN ROLLER_PAS ml

Comp. -

SERIE 8000, OPTIMUM, GRAPE´S LINE

★ NEW ! **REF.384B**

N°2 TAPE EXPANSIVE PLUG ASSEMBLY 2013

Comp. 111192

SERIE 8000, OPTIMUM, GRAPE´S LINE

★ NEW ! **REF.384M**

N°14 CHAIN PADDLE PIVOT 43mm

Comp. 101905

SERIE 8000, OPTIMUM, GRAPE´S LINE

★ NEW ! **REF.384N**

N°15 STD PALLET STOP 112mm

Comp. 102135

SERIE 8000, OPTIMUM, GRAPE´S LINE

★ NEW ! **REF.384C**

N°3 CLOSURE CAP

Comp. 111117

SERIE 8000, OPTIMUM, GRAPE´S LINE

★ NEW ! **REF.384D**

N°4 QUICK COUPLER

Comp. 111116,131074

SERIE 8000, OPTIMUM, GRAPE´S LINE

★ NEW ! **REF.384E**

N°5 RAM PIVOT 22mm

Comp. 109919,105739

SERIE 8000, OPTIMUM, GRAPE´S LINE

REF.384F

0

Comp. 120261

SERIE 8000, OPTIMUM, GRAPE´S LINE

★ NEW ! **REF.384G**

N°7 SQUARE ROD 238mm

Comp. 111190

SERIE 8000, OPTIMUM, GRAPE´S LINE

★ NEW ! **REF.384H**

N°8 STRAP CLOSURE TAPE 225mm

Comp. 105513

SERIE 8000, OPTIMUM, GRAPE´S LINE

REF.384J

N°9,10,11 SCREW, NUT WASHER

Comp. 08188,08112,51538

SERIE 8000, OPTIMUM, GRAPE´S LINE

★ NEW ! **REF.384K**

N°12 RAM WEAR PLATE STD

Comp. 109835

SERIE 8000, OPTIMUM, GRAPE´S LINE

★ NEW ! **REF.384L**

N°13 PALLET 21X30

Comp. 101903

SERIE 8000, OPTIMUM, GRAPE´S LINE

★ NEW ! **REF.388A**

TALL TREE STD SQUARE 15

Comp. 85088

OPTIMUM, GRAPE´S LINE

★ NEW ! **REF.384P**

N°16 LOW TREE STD SQUARE 15

Comp. 102761

SERIE 8000, GRAPE´S LINE

★ **REF.384R**

KIT 2 CONVEYOR BELT 8015, 8030, 8035, GL20,GL25, GL40, GL45

Comp. 39F1310

62 ref.384P + 62 ref.384L

(10,39M)

★ **REF.384S**

KIT 2 CONVEYOR BELT 8050,8090

Comp. -

65 ref.384P + 65 ref.384L

(10,88M)

★ **REF.388B**

KIT2 CONVEYOR BELT OPTIMUM HEAD L (L4,L6, easy smart ,esy collect, GL60,80)

Comp. 39F1313

70 ref.384L + 70 ref.388A

(11,38M)

All trademarks belong to their respective owners and their use is for informational purposes only.

Check Ref. Before.

WWW.EDUARDOREPUESTOSAGRICOLAS.COM

Free EU transport on orders 600€

PELLENC COMPATIBLE

EDUARDO

EASY SMART XL, GR

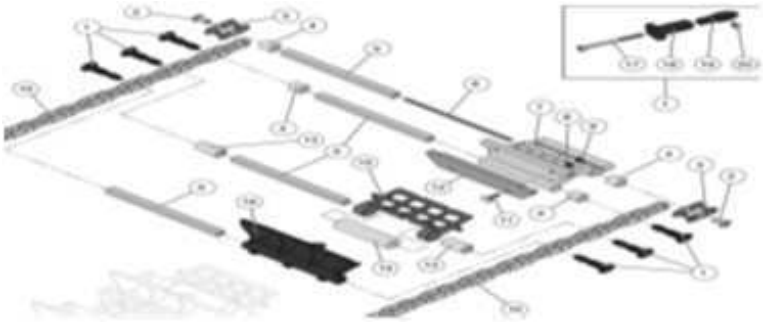

★ NEW ! **REF.385A**

KIT 2 CONVEYOR BELT MAV 8015 - 8040, GL40,GL60,GL80

Comp. -

SERIE 8000, OPTIMUM, GRAPE´S LINE

★ NEW ! **REF.385B**

N°1 TAPE EXPANSIVE PLUG ASSEMBLY 2013

Comp. 111192

SERIE 8000, OPTIMUM, GRAPE´S LINE

REF.361A*

BLADE SEPARATOR PADDLE STD

Comp. 20684

SERIE 3000, 4000

REF.361B*

BLADE SEPARATOR PALETTE GR

Comp. 29339

SERIE 3000, 4000

★ NEW ! **REF.385C**

N°3 CLOSURE CAP

Comp. 111117

SERIE 8000, OPTIMUM, GRAPE´S LINE

★ NEW ! **REF.385D**

N°3 QUICK COUPLER

Comp. 111116,131074

SERIE 8000, OPTIMUM, GRAPE´S LINE

★ NEW ! **REF.385E**

N°4 RAM PIVOT 22mm

Comp. 109919,105739

SERIE 8000, OPTIMUM, GRAPE´S LINE

★ NEW ! **REF.385F**

N°5 ROLLER TAPE CLOSURE TUBE 309mm

Comp. 111212

SERIE 8000, OPTIMUM, GRAPE´S LINE

★ NEW ! **REF.385G**

N°6 SQUARE ROD 288mm

Comp. 105592

SERIE 8000, OPTIMUM, GRAPE´S LINE

★ **REF.385H**

N°7 RAM KIT

Comp. 120479,120321

SERIE 8000, OPTIMUM, GRAPE´S LINE

REF.385J

N°8,9,11 SCREW, NUT WASHER

Comp. 08112,08188,60856

SERIE 8000, OPTIMUM, GRAPE´S LINE

★ NEW ! **REF.385K**

N°12 RAM WEAR PLATE GR

Comp. 109778

SERIE 8000, OPTIMUM, GRAPE´S LINE

★ NEW ! **REF.385L**

N°13 CHAIN PADDLE PIVOT 43mm

Comp. 101905,120123

SERIE 8000, OPTIMUM, GRAPE´S LINE

★ NEW ! **REF.385M**

N°14 CHAIN PADDLE PIVOT 178 mm

Comp. 105409

SERIE 8000, OPTIMUM, GRAPE´S LINE

★ NEW ! **REF.385N**

N°15 PALLET GR 21X30

Comp. 102134

OPTIMUM

★ NEW ! **REF.385P**

N°16 TALL SQUARE TREE 15

Comp. 87364

OPTIMUM

★ **REF.385R**

KIT 2 OPTIMUM CONVEYOR BELT XL HEAD

Comp. 39F1308

73 ref.385N + 73 ref.385P

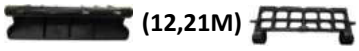

(12,21M)

REF.380A*

ORANGE PAINTING (SPRAY 0,4L)

Comp. 1640055

SERIE 3000, 4000, 8000, OPTIMUM, GRAPE´S LINE

Free EU transport on orders 600€

All trademarks belong to their respective owners and their use is for informational purposes only.

WWW.EDUARDOREPUESTOSAGRICOLAS.COM

Check Ref. Before.

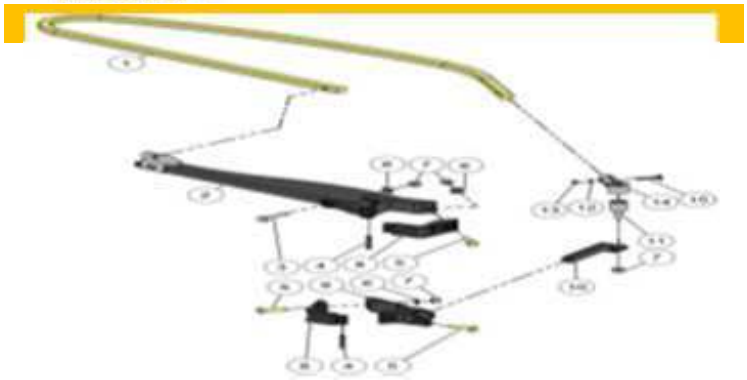

★ **REF.386N**

NEW !

N°2 OPTIMUM ARM

Comp. 150282

OPTIMUM

REF.371A*

N°2 OPTIMUM ARM

Comp. 23825

SERIE 3000

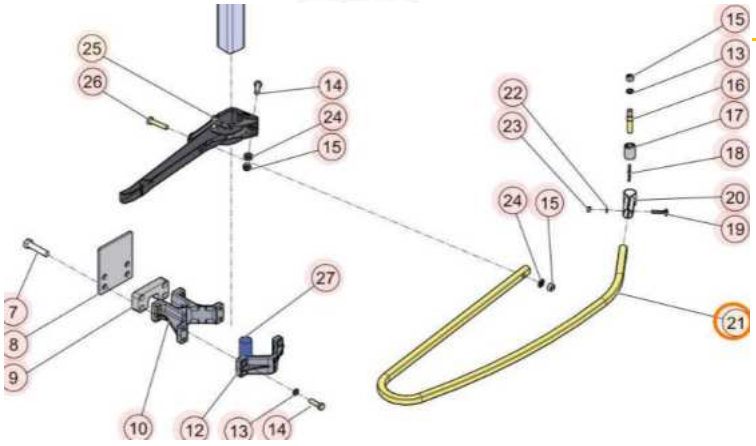

★ **REF.386P**

NEW !

ARM 80XX

Comp. 107465

SERIE 8000

★ **REF.371C***

NEW !

ILS GUIDED PROBE

Comp. 68877

SERIE 3000, 4000, 8000, OPTIMUM, GRAPE´S LINE

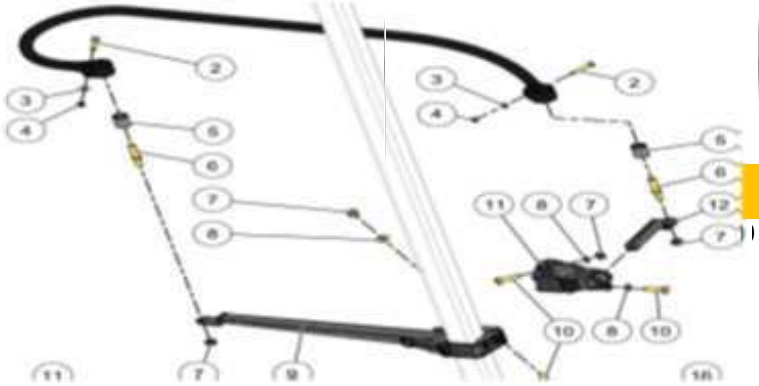

★ **REF.387Q**

NEW !

N°9 REAR SHAKER SUPPORT

Comp. 132150

OPTIMUM, GRAPE´S LINE

REF.371E*

NEW !

HEIGHT PROBE

Comp. 64292

SERIE 3000, 4000, 8000, OPTIMUM, GRAPE´S LINE

REF.386G

SCREW 30, NUT, WASHER M12

Comp. -

OPTIMUM

★ **REF.386H**

NEW !

COUNTER FLANGE SHAKER SUPPORT

Comp. 69051

SERIE 8000, OPTIMUM, GRAPE´S LINE

REF.386B*

N°8, 9 and 4 SHAKER SUPPORT COUNTERFLANGE ASSEMBLY

Comp. 70628

SERIE 8000, OPTIMUM, GRAPE´S LINE

REF.386C

N°10 FRONT ARM SUPPORT

Comp. 75682

SERIE 8000, OPTIMUM, GRAPE´S LINE

REF.387C

N°3,6,7 SCREW 40, NUT, WASHER M12

Comp. 14788,47069,115252

SERIE 8000, OPTIMUM

REF.386D

N°3,6,7 SCREW 55, NUT, WASHER M12

Comp. 115251,47069,115252

OPTIMUM

★ **REF.382A**

PLATE 2mm

Comp. -

SERIE 8000, OPTIMUM, GRAPE´S LINE

★ **REF.382B**

PLATE 4mm

Comp. -

SERIE 8000, OPTIMUM, GRAPE´S LINE

All trademarks belong to their respective owners and their use is for informational purposes only.

PELLENC COMPATIBLE

EDUARDO

EASY SMART L

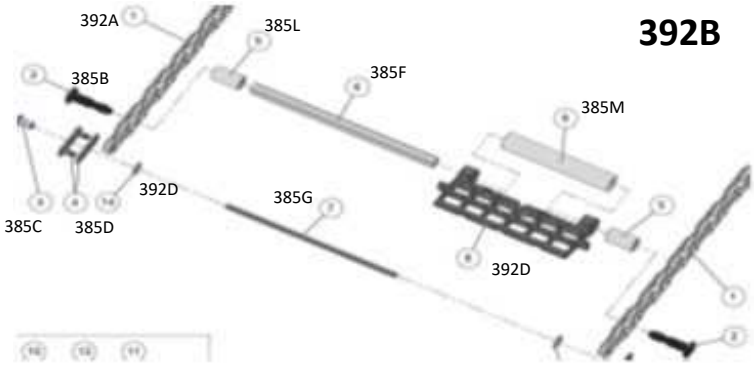

REF.392A

CHAIN 1780 MM

Comp. 111213

EASY SMART L

REF.392B

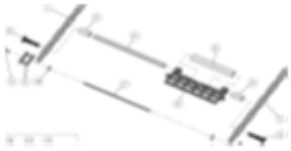

CHAIN V3 CV PP21-30 314X85X1821_22M

Comp. 138107

22 u. REF.392C

EASY SMART XL, EASY COLLECT L

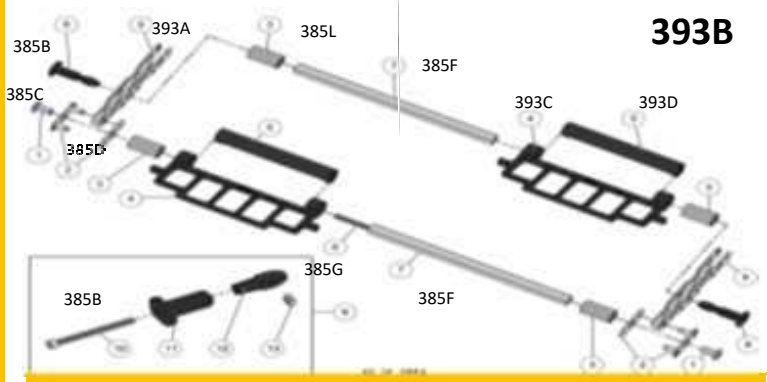

REF.385N

N°15 PALLET GR 21X30

Comp. 102134

OPTIMUM

REF.392D*

NEW !

BELIER ADJUSTING WASHER

Comp. 112012

EASY SMART L

EASY SMART LSP2, XLSP2, XLESP2

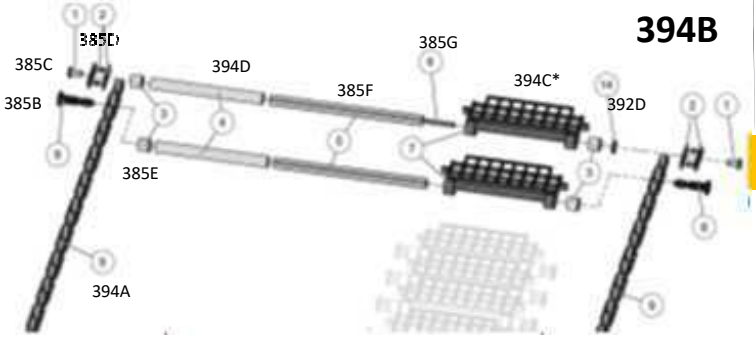

REF.393A

CHAIN 2101 MM

Comp. 121302

EASY SMART XL, EASY COLLECT L

REF.393B

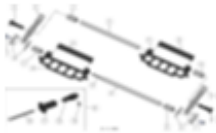

CHAIN V3 CV PP35-50 314X85X2463_26M

Comp. 121302

22 u. REF393C

REF.395A

NEW !

RIGHT BLADE

Comp. 64926

SERIE 3000, SERIE 8000, OPTIMUM, GRAPE´S LINE

REF.395B

NEW !

LEFT BLADE

Comp. 64927

SERIE 3000, SERIE 8000, OPTIMUM, GRAPE´S LINE

REF.393C*

SEPARATOR PALLET 50X35 TAPE

Comp. 123526

EASY SMART XL, EASY COLLECT L

REF.393D*

TUBE 50X35

Comp. 123602

EASY SMART XL, EASY COLLECT L

REF.394C*

SEPARATOR PALLET 21x21 - SPW2013

Comp. 105737

EASY SMART LSP2, XLSP2, XLESP4

REF.394D*

TUBE D.22 LG230 SPW 2013

Comp. 105745

EASY SMART LSP2, XLSP2, XLESP5

REF.394A

CHAIN 2939 MM

Comp. 138125

EASY SMART LSP2, XLSP2, XLESP2

REF.394B

CHAIN V3 CV PP21-21

Comp. 138106

36 u. REF394C

Check Ref. Before.

All trademarks belong to their respective owners and their use is for informational purposes only.

WWW.EDUARDOREPUESTOSAGRICOLAS.COM

VAT not included

Free EU transport on orders 600€

Origin *Burgos*
Destination *the world*

The total or partial reproduction of this catalog, including texts, drawings and photographs, as well as its conservation in any medium or its transmission in any form or by any digital, mechanical, photocopying, scanning or any other means without prior authorization is totally prohibited.

The images used are for illustrative purposes only and they could differ from the original models.

All product names, logos and brands are property of their respective owners. All company product and service names used on this website are used for identification purposes only. The use of these names, logos and brands does not imply endorsement of any kind.

The information of this catalog could be changed without prior notice.

Copyright © 2022

EDUARDO REPUESTOS AGRÍCOLAS

MOLDES Y RESINAS, S.L.
Calle López Bravo 24-26, nave 26
Polígono Villalonquéjar
09001 Burgos, España

Tel. +34 606 39 41 29
ot@eduardorepuestosagricolas.com
www.eduardorepuestosagricolas.com

NEW HOLLAND | GREGOIRE | PELLENC